Female receptacle

066 50

Technical modifications reserved

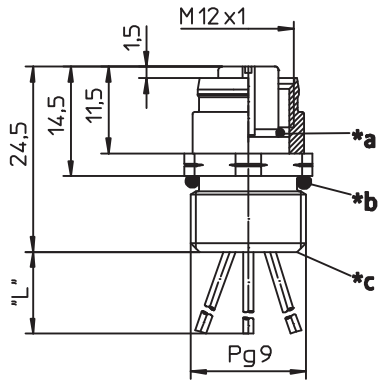

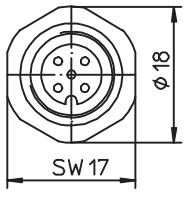

Catalog type: RKF.../0,5 M

- Female receptacle M 12 and FIXCON® compatible
- Standard wire length "L" = 0,5m
- Thread chassis side Pg 9
- Colour code for leads according to Euro - standard

1. Ambient temperature : -25 °C / +80 °C

2. Material

Housing	: CuZn, nickel - plated
Insert	: PUR
Contact	: CuSn, pre - nickeled and 0,3 microns gold - plated
O - Ring	: FKM

3. Mechanical data

Degree of protection *	: IP67

Good chemical resistance

Resistance needs to be approved in special cases

4. Electrical data

Contact resistance	: ≤ 5 mΩ
Nominal current	: 4 A
Nominal voltage	: 240 V
	: 5- poles 60 V
Test voltage	: 2 $kV_{eff.}$ / 60 s
	: 5- poles 1,5 $kV_{eff.}$ / 60 s
Isulation resistance	: > $10^9 \Omega$
Pollution level	: 3

* Only in fully locked position with its proper counterparts sealing has to be assured by suitable means

*a O-Ring
*b O-Ring loose enclosed
*c Solder contacts epoxy potted
"L"= Standard wire length
Additional technical data of wires 908...

Type	Standard - Contact Configuration		
	Poles		Colour code
RKF 4-3 / 0,5 M	3		1 = brown 2 = n.c. 3 = blue 4 = black
RKF 4 / 0,5 M	4		1 = brown 2 = white 3 = blue 4 = black
RKF 5 / 0,5 M	5		1 = brown 2 = white 3 = blue 4 = black 5 = green / yellow

		date	name	edit.	–	1							
lumbergautomation A BELDEN BRAND	iss.	19.09.06	se	name	se	Voc							
	appr.	26.03.14	Rück	date	19.09.06	25.03.14							

Technical specification sheet

no. of modification

sheet 1 of

KS / FP / QP/QS / PM / WE-3 / VK-MA /