Product datasheet

Specifications



photo-electric sensor - XUK - emitter - 24..240VAC/DC - cable 2m

XUK2ARCNL2T

Main

Range of product	Telemecanique Photoelectric sensors XU
Series name	General purpose single mode
Electronic sensor type	Photo-electric sensor transmitter
Sensor name	XUK
Sensor design	Compact 50 x 50
Detection system	Thru beam
Material	Plastic
Supply circuit type	AC/DC
Wiring technique	2-wire
Electrical connection	Cable
Cable length	2 m
Product specific application	-
Emission	Infrared thru beam
[Sn] nominal sensing distance	30 m thru beam need a receiver

Complementary

Enclosure material	PBT
Lens material	PMMA
Maximum sensing distance	45 m thru beam
Add on input	Test by emission breaking
Wire insulation material	PVC
Status LED	1 LED (green) for supply on
[Us] rated supply voltage	24...240 V AC/DC
Supply voltage limits	20…264 V AC/DC
Switching capacity in mA	3 A (cos φ = 1 for 0.5 million cycles at 1 operating cycle per second at 250 V)
Switching frequency	<= 250 Hz
Maximum voltage drop	<1.5 V (closed state)
Current consumption	<= 35 mA no-load
Maximum delay first up	60 ms

Disclaimer: This documentation is not intended as a substitute for and is not to be used for determining suitability or reliability of these products for specific user applications

Maximum delay response	25 ms
Maximum delay recovery	25 ms
Setting-up	Without sensitivity adjustment
Depth	50 mm
Height	50 mm
Width	18 mm

Environment

Product certifications	CSA CE UL
Ambient air temperature for operation	-25…55 °C
Ambient air temperature for storage	-40…70 °C
Vibration resistance	7 gn, amplitude = +/- 1.5 mm (f = 10…55 Hz) conforming to IEC 60068-2-6
Shock resistance	30 gn (duration = 11 ms) conforming to IEC 60068-2-27
IP degree of protection	IP65 double insulation conforming to IEC 60529

Packing Units

Unit Type of Package 1	PCE
Number of Units in Package 1	1
Package 1 Weight	162.0 g
Package 1 Height	4.2 cm
Package 1 width	9.7 cm
Package 1 Length	13.3 cm
Unit Type of Package 2	S02
Number of Units in Package 2	22
Package 2 Weight	3.988 kg
Package 2 Height	15 cm
Package 2 width	30 cm
Package 2 Length	40 cm

Offer Sustainability

EU RoHS Directive	Pro-active compliance (Product out of EU RoHS legal scope) EU RoHS Declaration
Mercury free	Yes
RoHS exemption information	Yes
Environmental Disclosure	Product Environmental Profile
Circularity Profile	End of Life Information

Contractual warranty

Warranty	18 months

Product datasheet XUK2ARCNL2T

Dimensions Drawings

Dimensions

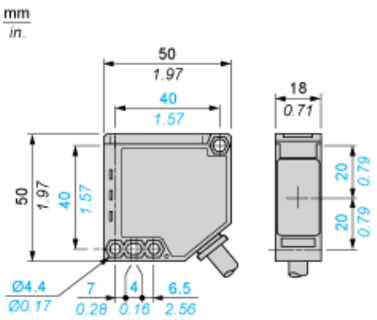

Product datasheet XUK2ARCNL2T

Connections and Schema

Wiring Schemes

Thru-beam Transmitter AC/DC

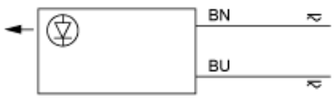

BN : Brown
BU : Blue

Product datasheet XUK2ARCNL2T

Performance Curves

Detection Curves

