SGD 70-A

7" PanelPilotACE Compatible Display

SGD 70-A is a 7" capacitive touch display designed for use with PanelPilotACE Design Studio, a free drag-and-drop style software package for rapid development of advanced user interfaces and panel meters.



The SGD 70-A is part of the PanelPilotACE range of compatible displays and panel meters. The low-profile display features a 7" capacitive touch screen and a dual-core ARM processor running embedded Linux. The display can be powered from a 5 to 30V d.c. supply and offers users a wealth of hardware interfaces which include four 16bit bi-polar analogue inputs (to a maximum of ±40V d.c.), eight digital input/output pins, two alarm outputs (maximum current sink 10mA) and four 8bit PWM outputs.

Users program the display using the free PanelPilotACE Design Studio software which allows the creation of anything from simple meters and dials, through to advanced user interfaces with control elements.

Specifications

Display	7" TFT with 16.7M colours
Touchscreen	Capacitive
Resolution	1024 x 600 px
Processor	Freescale iMX6XSolo (ARM Cortex A9 @ 800MHz & Cortex M4 @227MHz)
Analogue Inputs	4 x ±40V or 4-20mA (16bit ADC with 0.05% ±1mV typical accuracy*)
Digital I/O	8 x DIO, 2 x open-collector alarm outputs, 4 x 8 bit PWM outputs
Serial Buses	RS232, RS485, SPI**, I2C**
Logged Data Interface	- USB connection to PC running Design Studio or Device Utility Software - FTP connection to Server PC over wired Ethernet
Expansion Boards* **	CANbus
Memory	2Gbit DDR3 SDRAM and 2GB SD card
Operating Temperature	0 to 40°C (32 to 104°F)
Supply	5 to 30V d.c. (1A typical at 5V d.c.)
Outside Dimensions	186 x 122 x 21mm (7.3" x 4.8" x 0.8")

* For measurement ranges up to ±10V.
** Not currently available in Design Studio.
*** Available with Add-On Board.

SGD 70-A

7" PanelPilotACE Compatible Display

PanelPilotACE Design Studio



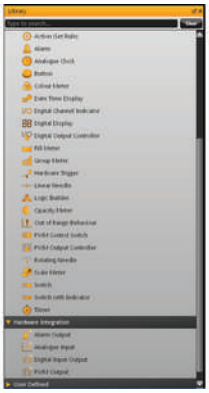


Code-Free development for industrial display projects

The PanelPilotACE Design Studio software provides a number of building blocks which allow users to drag-and-drop elements onto the screen to quickly create advanced display interfaces. From images to text elements, analogue style meters, touch screen navigation elements, logic statements, data logging, trend graphing and calculations, users can build up multi-screen interfaces without needing to write a line of code.

There is a library of pre-defined elements such as meters, buttons and switches, and users can create their own content by combining elements or importing graphics in a number of formats (including jpg, png, tif, bmp and gif). The software includes support for transparency and multiple layers.

Hardware interfacing is similarly intuitive, with hardware elements being dragged into a function builder where associations with graphical elements (such as a needle on a meter) can be defined. Here users can determine scaling for analogue inputs, define alarm triggers, behaviours for digital inputs and outputs and configure PWM outputs.

PID Control:

Use your display as a PID control unit. Set P, I and D coefficients, measure a process variable and use PanelPilotACE to correct to your desired set point.

Easy Collection of Logged Data:

Easily collect logged data by connecting the PanelPilotACE via USB to a PC running Design Studio or Device Utility Software, or connect to an FTP Server via wired Ethernet.

Multi-Channel Data Logging:

10 logging channels allowing logging of any input to the device that can be defined numerically.

Trend Graphs:

Display data on graphs as it is logged. If you use an alarm threshold as one of your data channels, monitor logged data against alarm levels.

Previewing and Uploading Projects:

The software includes a 'Preview in Emulator' function which emulates the hardware's inputs and outputs, allowing users to test their projects prior to upload. Projects are uploaded to the SGD 70-A via a mini USB port.

PanelPilotACE Design Studio is compatible with Windows 7, 8 and 10 and can be downloaded free from www.lascarelectronics.com/software/panelpilotace

SGD 70-A

7" PanelPilotACE Compatible Display

Dimensions

All dimensions are in mm (in)

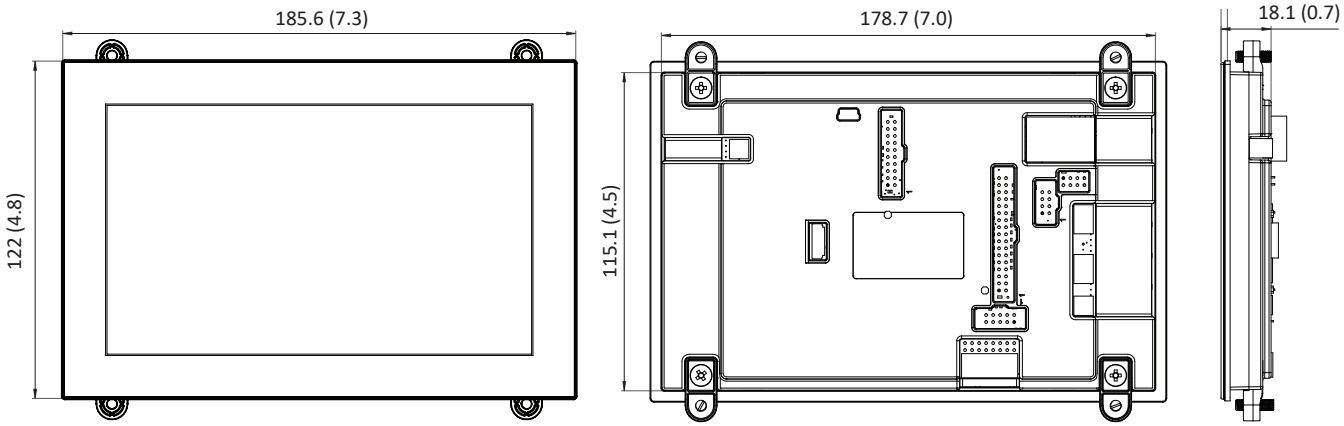

Panel Cut-Out and Fitting

The panel cut-out is 180 x 117mm (7.1" x 4.57").

The module can be mounted in panels between 0.5 and 4.0mm (0.01" and 0.15") in thickness.

To do this take the four bracket clips supplied and use the screws to secure these to the mounting holes located on the rear of the module.

Then place the module in the panel and tighten the grub screws located in each bracket to secure the module within the panel.

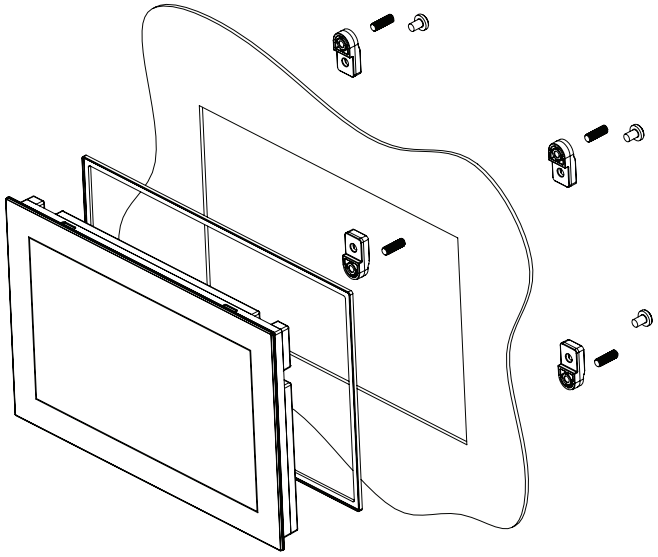

SGD 70-A

7" PanelPilotACE Compatible Display

Pin Out

TB1: Power Inputs

Terminal	Function
VIN	Supply Voltage (V+)
0V	0V

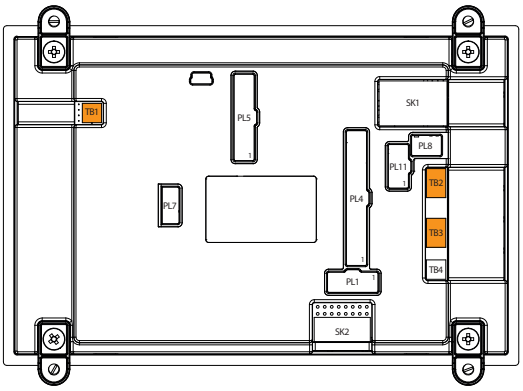

TB2: Analogue Inputs

Terminal	Function
0V	0V
IN1	Analogue Input 1
IN2	Analogue Input 2

TB3: Analogue Inputs

Terminal	Function
0V	0V
IN3	Analogue Input 3
IN4	Analogue Input 4

PL11: Analogue Inputs

Pin Number	Function
1	Analogue Input 1 (IN1)
2	0V
3	Analogue Input 2 (IN2)
4	0V
5	Analogue Input 3 (IN3)
6	0V
7	Analogue Input 4 (IN4)
8	0V

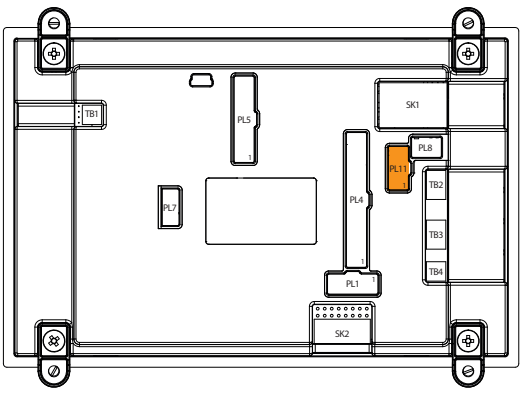

PL8: 4-20mA Current Loop Measurement Link Positions

Pin Number	Function
1-2	4-20mA current loop measurement (IN1) when shorted
3-4	4-20mA current loop measurement (IN2) when shorted
5-6	4-20mA current loop measurement (IN3) when shorted
7-8	4-20mA current loop measurement (IN4) when shorted

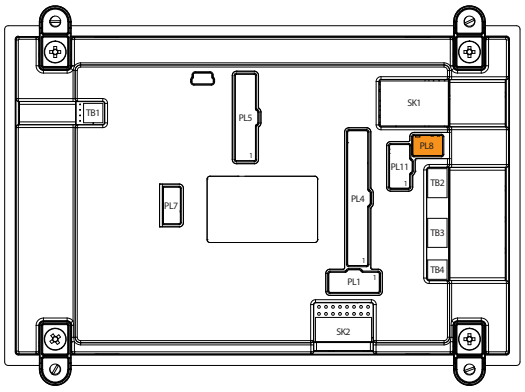

Pin Out (continued...)

PL4: Alarms, Serial Input and Digital I/O

Pin Number	Function
1	0V
2	Supply Voltage (V+)
3	Alarm 1 (ALM1)
4	Alarm 2 (ALM2)
5	I2C0 SCL
6	I2C0 SDA
7	SPI SS1
8	SPI MOSI
9	SPI MISO
10	SPI SCK
11	Digital I/O Channel 1 (DIG1)
12	Digital I/O Channel 2 (DIG2)
13	Digital I/O Channel 3 (DIG3)
14	Digital I/O Channel 4 (DIG4)
15	Digital I/O Channel 5 (DIG5)
16	Digital I/O Channel 6 (DIG6)
17	Digital I/O Channel 7 (DIG7)
18	Digital I/O Channel 8 (DIG8)
19	PWM Channel 1 (PWM1)
20	PWM Channel 2 (PWM2)
21	PWM Channel 3 (PWM3)
22	PWM Channel 4 (PWM4)

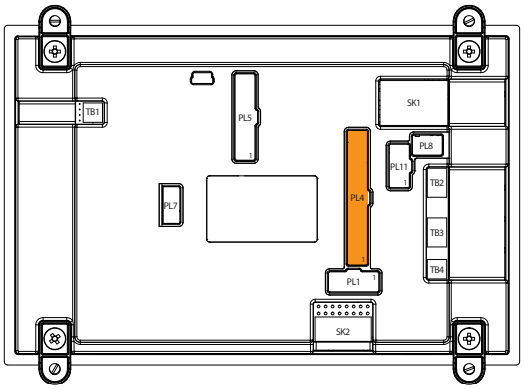

23	DUART TX (for internal use)
24	DUART RX (for internal use)
25	USB D+
26	USB D-
27	I2C1 SDA (for internal use)
28	I2C1 SCL (for internal use)
29	+5V Output Voltage
30	High Speed ADC
31	+3V3 Output Voltage
32	0V
33	Shorted together to enable
34	firmware upgrade

PL7: RS232 Interface

Name	Function
TX	Transmit Output
RTS	Request to send Output
RX	Recieve Input
CTS	Clear to send Input
0V	0V

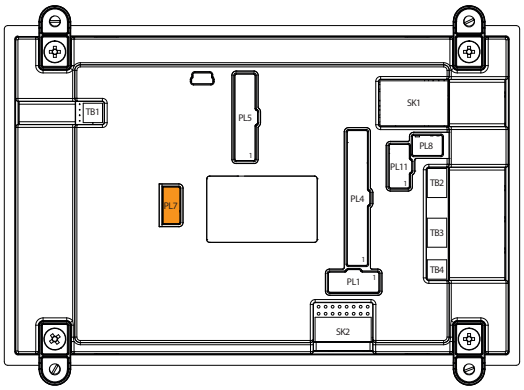

SGD 70-A

7" PanelPilotACE Compatible Display

Pin Out (continued...)

TB4: RS485 Interface

Terminal	Function
A	RS485 A Signal
B	RS485 B Signal

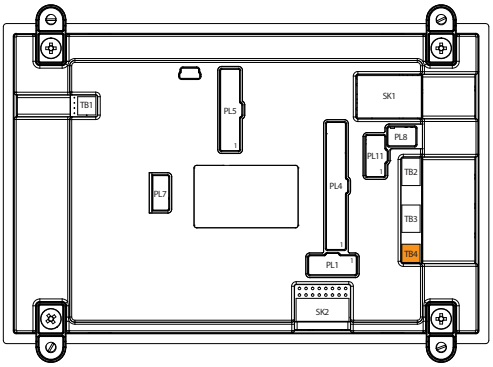

PL5: Factory Programming Interface (JTAG)

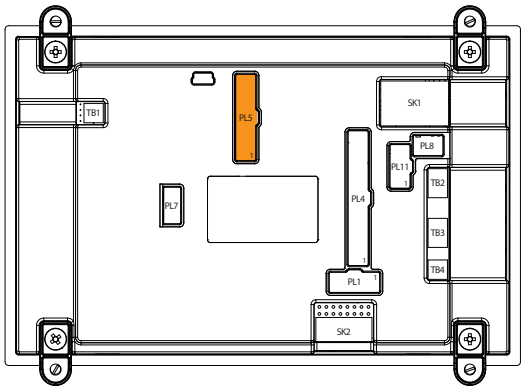

Various Operating Modes

Supply Voltage

Supply to the display module can be connected to either the screw terminals (TB1) or pins (PL4)

For best results, ensure the power supply is free from electrical noise.

Supply Voltage	Screw Terminals (TB1)	Pin (PL4)
V+	VIN	2
0V	0V	1

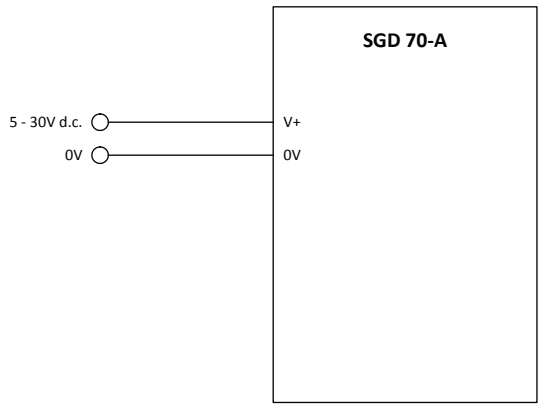

Measuring an Analogue Voltage

An analogue voltage can be connected to either the screw terminals (TB1) or pins (PL11).

Analogue Input		Screw Terminals	Pin (PL11)
		TB2	
1	IN1	IN1	1
	0V	0V	2
2	IN2	IN2	3
	0V	0V	4
		TB3	
3	IN3	IN3	5
	0V	0V	6
4	IN4	IN4	7
	0V	0V	8

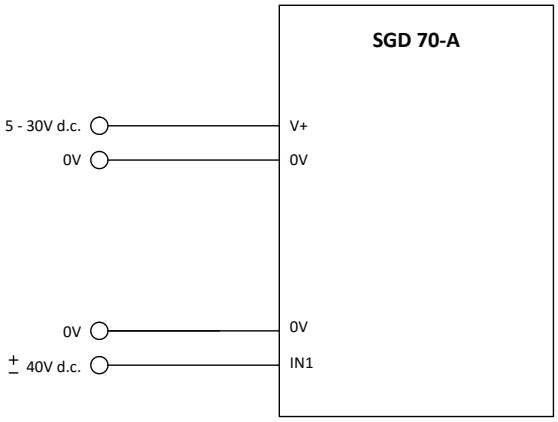

To minimise offsets it is best practice to connect analogue grounds directly to the meter pins (PL11) or screw terminals (TB1).

The SGD 70-A uses a programmable gain amplifier (PGA) together with a 16-bit analogue to digital converter (ADC) for its analogue voltage measurements. The PGA is automatically set when the analogue range of a channel is input into the PanelPilotACE Design Studio.

The table to the right shows the maximum resolution of the SGD 70-A's analogue measurements across a number of voltage ranges.

Analogue Input	Resolution
±1.25V	0.04mV
±2.5V	0.08mV
±5V	0.16mV
±10V	0.33mV
±20V	0.66mV
±40V	1.3mV

Various Operating Modes (continued...)

Measuring a 4-20mA Current

The 4-20mA signal should be connected as for "Measuring an Analogue Voltage" but a jumper link should be placed across pins PL8 for each analogue channel being used:

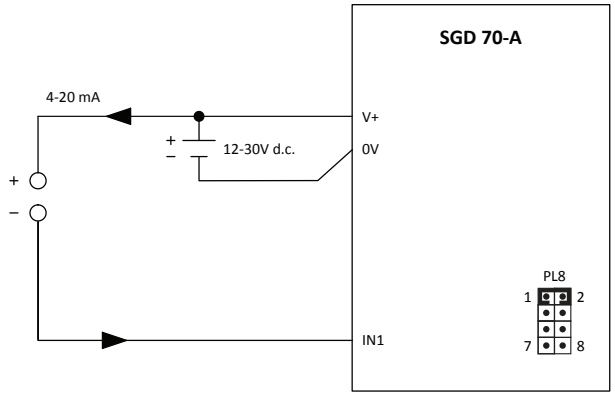

Analogue Voltage	Jumper link (PL8)
IN1	1 & 2
IN2	3 & 4
IN3	5 & 6
IN4	7 & 8

Scaling: The sense resistors used are 110Ω. Therefore in software scaling 4mA equates to 0.44V and 20mA equates to 2.2V.

Note: transmitter terminals (+ or -) must be isolated from the power supply

Driving an Alarm Output

The alarm outputs are open-collector. When an alarm is active, the output can sink up to 10mA.

Alarm outputs are connected via PL4:

Alarm Output	Pin (PL4)
ALM1	3
ALM2	4

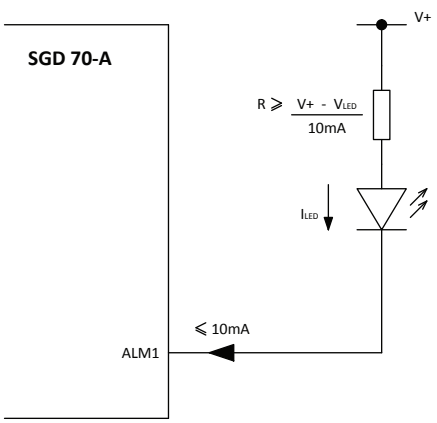

Driving an LED using alarm output

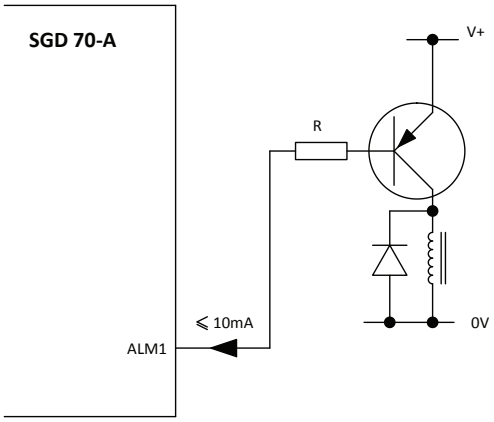

Driving a relay using alarm output

Various Operating Modes (continued...)

Using Digital Input/Output Pins

Digital inputs/outputs are connected via PL4:

Digital I/O	Pin (PL4)
DIG1	11
DIG2	12
DIG3	13
DIG4	14
DIG5	15
DIG6	16
DIG7	17
DIG8	18

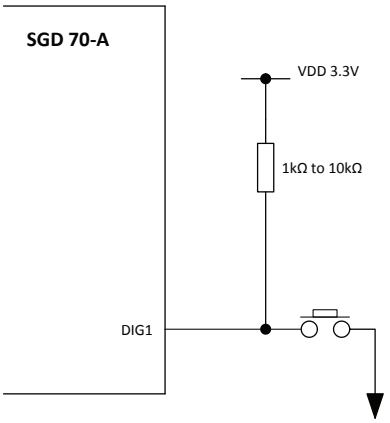

Generating a digital input with a push button

The characteristics of the digital I/O pins are as follows:

Parameter	Min	Max	Unit
Input voltage (high)	2	3.3	V
Input voltage (low)	0	0.8	V
Output voltage (high)	2.6	3.3	V
Output voltage (low)	0	0.4	V
Output source current	-11.4	-	mA
Output sink current	9.0	-	mA

Absolute Maximum ratings:

Parameter	Min	Max	Unit
Input voltage relative to ground	-0.3	3.6	V

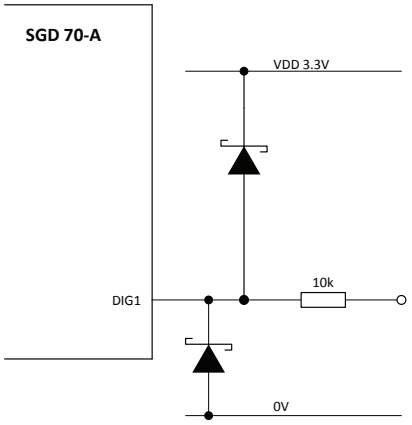

Protection circuit for digital I/O

For maximum flexibility in accommodating external add-on boards and interfacing to external circuits, the digital I/O pins connect directly to the microcontroller and do not contain any buffering or protection circuitry. Take care not to exceed the maximum ratings, otherwise the unit may be permanently damaged.

If there is a risk that inputs may exceed these values, then voltage limiting must be used (example circuit above). Note that the protection diodes must be of the Schottky type and not regular silicon diodes.

Various Operating Modes (continued...)

Using PWM Output

If the SGD 70-A is configured to have PWM output, it can be used to drive a buzzer or produce a simple digital-to-analogue converter.

The PWM outputs are connected via PL4:

PWM Output	Pin (PL4)
PWM1	19
PWM2	20
PWM3	21
PWM4	22

The characteristics of the PWM output pins are as follows:

Parameter	Min	Max	Unit
Voltage	0	3.3	V
Output source current (PWM)	-9.5	-	mA
Output sink current (PWM)	7.7	-	mA

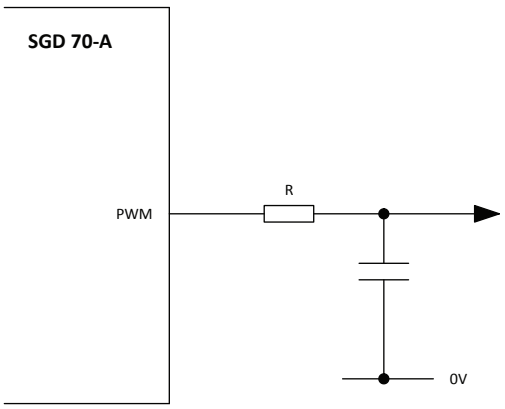

Using PWM output to convert digital to analogue

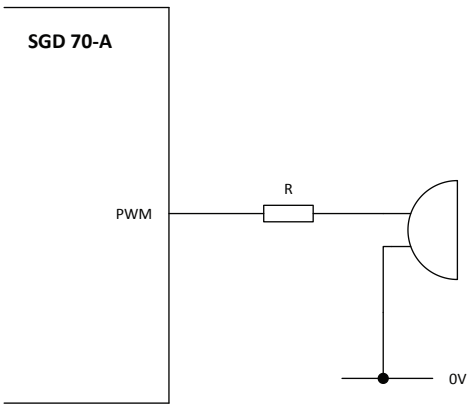

Using PWM output to drive a buzzer

For more information on configuring your device, visit our YouTube channel **www.youtube.com/panelpilot** for tutorials or the PanelPilot University **www.lascarelectronics.com/panelpilotace-university**