WATERPROOF GT 52-21 PEL

Waterproof polypropylene tool case





General features

- waterproof and airtight
- interstackable
- corrosionproof, sandproof and dustproof
- shockproof and crushproof
- temperature rating -33°C/+90°C
- ergonomic handle, rubber coated grip
- jam free latches with user-friendly opening mechanism
- corrosion proof metal hinges with lid stay features
- pressure release valve
- special PU injected seal
- stainless steel reinforced pad lockable points providing maximum security

Internal Configuration

- Airport handling resistant
- Unique storage capacity
- Cabin Size (complies with major airlines' restrictions)
- Wheels and telescopic handle
- Equipped with gas-pressurised lid supports
- Document wallet in the lid for A4 docs
- 1 Upper tool pallet with PEL (double side with elastics)
- 1 Lower tool pallet with PEL (one side with elastics)
- Automatic pressure release valve
- I.D. label with protective cover
- New pull release latch for optimal drop test proof
- Bottom compartment with tray and Alu reinforced adjustable dividers
- Shipping label holder (optional)

Versions

WATERPROOF GT 42-09 PEL
WATERPROOF GT 42-09 PTS
WATERPROOF GT 42-16 PEL
WATERPROOF GT 42-16 PTS
WATERPROOF GT 44-19 PEL
WATERPROOF GT 44-19 PSS
WATERPROOF GT 44-19 PTS
WATERPROOF GT 52-21 PEL
WATERPROOF GT 52-21 PSS
WATERPROOF GT 52-21 PTS
WATERPROOF GT 53-26 PEL
WATERPROOF GT 53-26 PTS
WATERPROOF GT 58-23

EAN

8024482184302

Technical features	A	B	C	D	E
mm internal dimensions	520	285	205	55	150
	Weight Kg 6,73				
inc internal dimensions	20 1/2	11 1/4	8 1/16	2 3/16	5 7/8
	Weight lbs 14.83				

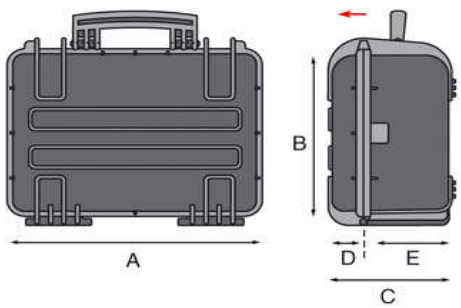

Copyright © 2024 - GT Line srl - Via del Lavoro, 9 - 40053 Loc. Crespellano Valsamoggia (Bologna) - Italy - Phone +39/051/65041 - Fax +39/051/734925
sales@gtline.com - www.gtline.com

WATERPROOF GT 52-21 PEL

Waterproof polypropylene tool case

Watertight and perfectly sealed thanks to the exclusive neoprene “O” ring and to the purge valve, these cases grant an absolute protection to your tools. Made of resistant lightweight resin, they are provided with strong locks and a useful and ergonomic handle. They are ideal for use in the harshest environment, such as industrial, aeronautical, military and nautical fields.

Copyright © 2024 - GT Line srl - Via del Lavoro, 9 - 40053 Loc. Crespellano Valsamoggia (Bologna) - Italy - Phone +39/051/65041 - Fax +39/051/734925
sales@gtline.com - www.gtline.com

Accessories

WATERPROOF GT 52-21 PEL



EXPL COMBILOCK



EXPL PADLOCK



WL01



WL02



WL03



WL04



WL05



EXPL TSA.DIGILOCK



UNIVERS.TROLLEY

Copyright © 2024 - GT Line srl - Via del Lavoro, 9 - 40053 Loc. Crespellano Valsamoggia (Bologna) - Italy - Phone +39/051/65041 - Fax +39/051/734925

sales@gtline.com - www.gtline.com