Anti-Vandal Pushbutton Switches waterproof, illuminated

Specifications:

Contact rating:	36 V DC, 2 A
Contact resistance:	<50 mΩ
Insulation resistance:	>1000 MΩ
Dielectric strength:	2000 V, 50 Hz for the duration of 1 minute
Operating temperature:	–20 °C to +70 °C
Mechanical life:	1000 000 operations
Operating force:	4.5 N ± 1.5 N
Protection:	IP 67
Material:	Case, button: aluminum Contacts: silver alloy Nut: nickel plated brass Base: PBT (UL 94 V-0)

Models:

MAV 16 CARE-1-JR-0V off – mom

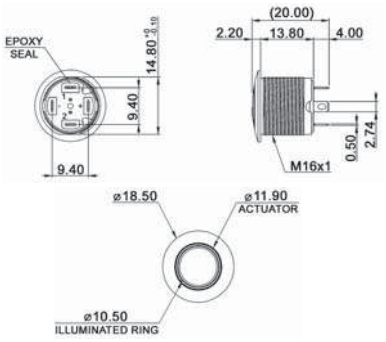

MAV 16 CBRE-1-JR-0V off – mom

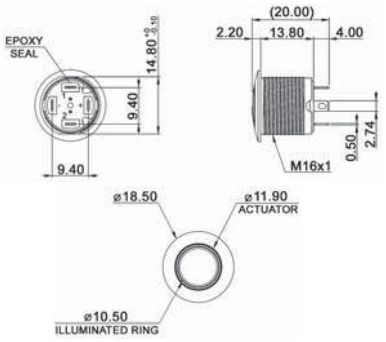

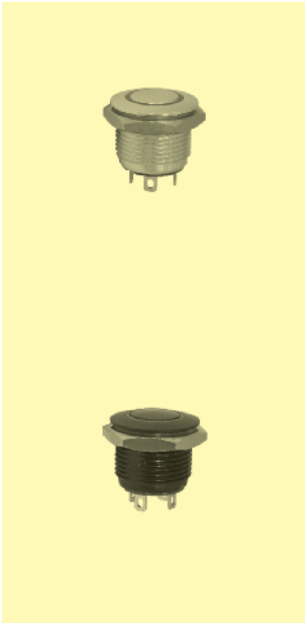

Ordering code: MAV 16 □□□ - □ - □□ □□ V

Button style:
R Curved

Material of button/case:
CA Aluminium
CB Aluminium, black

LED color:
0 no LED
1 White
3 Red
5 Yellow
6 Green
7 Blue

Lens style:
E Ring

Contact:
R Gold flash over silver

Terminals:
J Solder lugs
T1 Flying wire 500 mm

Resistor for LED:
0 Without resistor
3 3 V DC, ca. 20 mA
6 6 V DC, ca. 20 mA
12 12 V DC, ca. 20 mA
24 24 V DC, ca. 20 mA

The LED serial resistor is an external part, in scope of delivery.

13