

Image may differ from product. See technical specification for details.

# HK 4020.2RS

## Drawn cup needle roller bearing with open ends and integral sealing

Drawn cup needle roller bearings are typically used in applications where the housing bore cannot be used as a raceway for a needle roller and cage assembly, but where a very compact and economical bearing arrangement is required. Owing to their large number of rollers, the bearings have a high load carrying capacity and stiffness. The integral sealing can significantly prolong bearing service life because it keeps lubricant in the bearings and contaminants out. Sealed bearings are delivered with an initial grease fill.

- High radial load carrying capacity
- High stiffness
- Very low cross-sectional height
- Sealed for increased reliability

# Overview

## Dimensions

| | |
|---|---|
| Bore diameter of needle roller complement | 40 mm |
| Outside diameter | 47 mm |
| Width | 20 mm |

## Performance

| | |
|---|---|
| Basic dynamic load rating | 19 kN |
| Basic static load rating | 39 kN |
| Limiting speed | 4 500 r/min |

## Properties

| | |
|---|---|
| Bearing part | Bearing without inner ring |
| Number of rows | 1 |
| Outer ring type | Drawn cup with open ends |
| Aligning feature | Without |
| Cage | Sheet steel |
| Number of flanges, outer ring | 2 |
| Tolerance class | Normal |
| Material, bearing | Bearing steel |
| Coating | Without |
| Sealing | Seal on both sides |
| Sealing type | Contact |
| Lubricant | Grease |
| Relubrication feature | Without |

## Logistics

| | |
|---|---|
| Product net weight | 0.0478 kg |
| eClass code | 23-05-09-03 |
| UNSPSC code | 31171512 |

## Technical specification

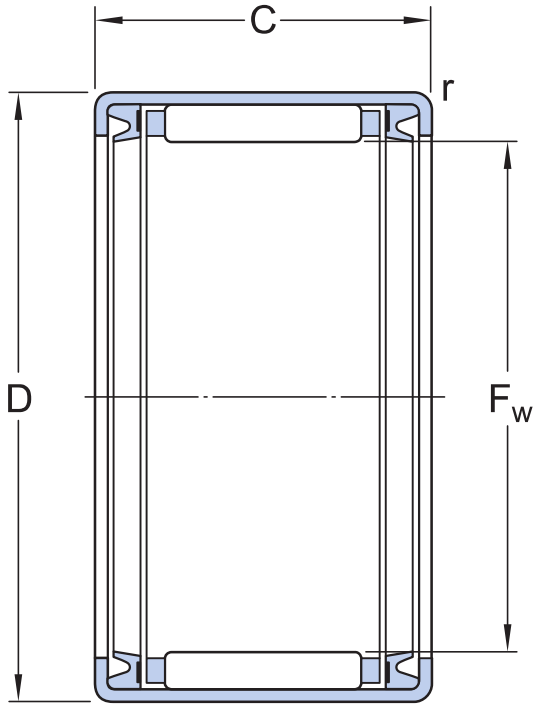


### Dimensions

| | | |
|---|---|---|
| $F_w$ | 40 mm | Diameter under rollers |
| D | 47 mm | Outside diameter |
| C | 20 mm | Width |
| r | min. 0.8 mm | Chamfer dimension drawn cup (outer ring) |

### Calculation data

| | | |
|---|---|---|
| Basic dynamic load rating | C | 19 kN |
| Basic static load rating | $C_0$ | 39 kN |
| Fatigue load limit | $P_u$ | 4.55 kN |
| Limiting speed | | 4 500 r/min |

### Associated products

| | |
|---|---|
| Inner ring IR series | IR 35x40x20.5 |
| Inner ring LR series | LR 35x40x20.5 |

## Tolerances and clearances

### GENERAL BEARING SPECIFICATIONS

- Tolerances: table

## DESIGN CONSIDERATIONS

- Shaft and housing tolerances: table

# Compatible products

## Recommended product

| | |
|---|---|
| Inner ring for needle roller bearings, IR series | IR 35X40X20.5 |
| Inner ring for needle roller bearings, LR series | LR 35X40X20.5 |

## More Information

### Product details

- Designs and variants
- General bearing specifications
- Loads
- Temperature limits
- Permissible speed
- Design considerations
- Mounting
- Designation system

### Engineering information

- Principles of rolling bearing selection
- General bearing knowledge
- Bearing selection process
- Bearing failure and how to prevent it

### Tools

- SimPro Quick
- Bearing Select
- Engineering Calculator
- LubeSelect for SKF greases
- Heater Selection Tool
- skf.com/mount

# Terms of use

By accessing and using this website / app owned and published by AB SKF (publ.) (556007-3495 · Gothenburg) (“SKF”), you agree to the following terms and conditions:

### Warranty Disclaimer and Limitation of Liability

Although every care has been taken to assure the accuracy of the information on this website / app, SKF provides this information "AS IS" and DISCLAIMS ALL WARRANTIES, EXPRESS OR IMPLIED, INCLUDING, BUT NOT LIMITED TO, IMPLIED WARRANTIES OF MERCHANTABILITY AND FITNESS FOR A PARTICULAR PURPOSE. You acknowledge that your use of this website / app is at your sole risk, that you assume full responsibility for all costs associated with use of this website / app, and that SKF shall not be liable for any direct, incidental, consequential, or indirect damages of any kind arising out of your access to, or use of the information or software made available on this website / app.

Any warranties and representations in this website / app for SKF products or services that you purchase or use will be subject to the agreed upon terms and conditions in the contract for such product or service.

Further, for non-SKF websites / apps that are referenced in our website / app or where a hyperlink appears, SKF makes no warranties concerning the accuracy or reliability of the information in these websites / apps and assumes no responsibility for material created or published by third parties contained therein. In addition, SKF does not warrant that this website / app or these other linked websites / apps are free from viruses or other harmful elements.

### Third Party Services

When viewing YouTube content via the SKF website(s) (i.e. using YouTube API Services), you agree to be bound by the YouTube Terms of Service.

### Copyright

Copyright in this website / app copyright of the information and software made available on this website / app rest with SKF or its licensors. All rights are reserved. All licensed material will reference the licensor that has granted SKF the right to use the material. The information and software made available on this website / app may not be reproduced, duplicated, copied, transferred, distributed, stored, modified, downloaded or otherwise exploited for any commercial use without the prior written approval of SKF. However, it may be reproduced, stored and downloaded for use by individuals without prior written approval of SKF. Under no circumstances may this information or software be supplied to third parties.

This website /app includes certain images used under license from Shutterstock, Inc.

### Trademarks and Patents

All trademarks, brand names, and corporate logos displayed on the website / app are the property of SKF or its licensors, and may not be used in any way without prior written approval by SKF. All licensed trademarks published on this website / app reference the licensor that has granted SKF the right to use the trademark. Access to this website / app does not grant to the user any license under any patents owned by or licensed to SKF.

### Changes

SKF reserves the right to make changes or additions to this website / app at any time.