E12727

Jumper cable with valve plug

PLUG M12 - DIN VALVE FORM A

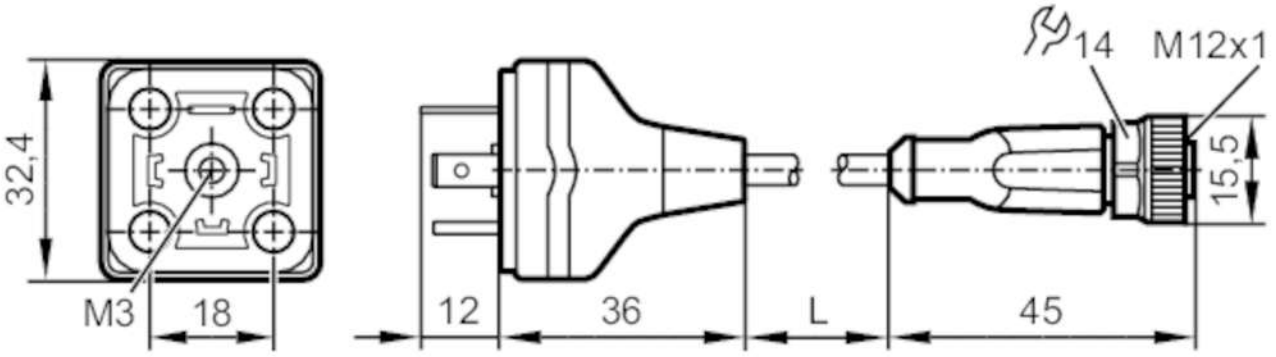

Application		
Special feature		Free from silicone; Halogen-free
Free from silicone		yes
Electrical data		
Operating voltage	[V]	< 50 AC / < 60 DC
Max. current load total	[A]	4
Operating conditions		
Ambient temperature	[°C]	-25...85
Protection		IP 65
Mechanical data		
Weight	[g]	68.2
Moulded-body material		TPU
Material nut		brass, nickel-plated
Sealing material		FKM
Remarks		
Pack quantity		1 pcs.

Electrical connection - plug

Connector: 1 x valve type A DIN, straight; Moulded body: TPU, black; Locking: brass, nickel-plated; Tightening torque: 0.6...1.5 Nm



E12727

Jumper cable with valve plug

PLUG M12 - DIN VALVE FORM A

Electrical connection

Cable: 0.4 m, PUR, Halogen-free, black, Ø 5.5 mm; 5 x 0.50 mm²

Connection

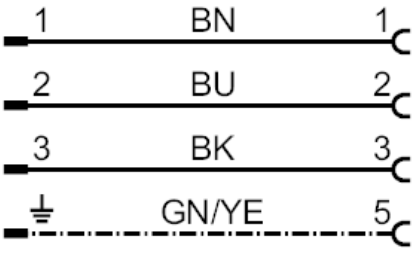

Electrical connection - socket

Connector: 1 x M12, straight; coding: A; Moulded body: TPU, black; Locking: brass, nickel-plated; Sealing: FKM; Tightening torque: 0.6...1.5 Nm

