Pressure regulator, Series MU1-RGS

5000 l/min
Pressure regulator



Port	Nominal flow [l/min]	Min. regulation range [bar]	Max. regulation range [bar]	Part No.
G 1	5000	0.5	10	R412006574

Dimensions

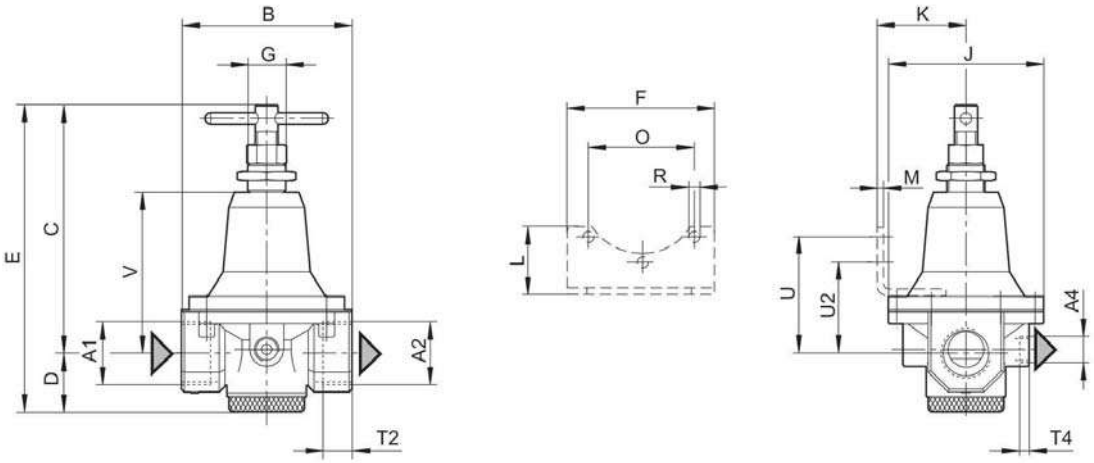

Part No.	A1	A2	A4	B ±5	C ±5	D ±5	E ±7	F	G	J ±5
R412006574	G 1	G 1	G 1/4	90	131	31	162	124	M20x1,5	82

Part No.	K	L	M	O	R	T2	T4	U	U2	V
R412006574	47	38	3	53.3	5.5	18	7	60.1	47.1	83