Current Transducer HAS 50 ... 600-S

I_{PN} = 50 ... 600 A

For the electronic measurement of currents: DC, AC, pulsed..., with galvanic separation between the primary circuit and the secondary circuit.



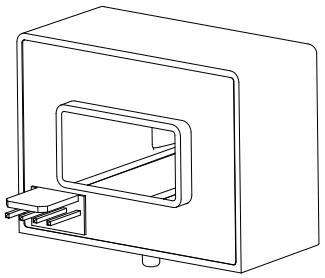

Electrical data

Type	Primary nominal RMS current I_{PN} (A)	Primary current, measuring range [1] I_{PM} (A)
HAS 50-S	50	±150
HAS 100-S	100	±300
HAS 200-S	200	±600
HAS 300-S	300	±900
HAS 400-S	400	±900
HAS 500-S	500	±900
HAS 600-S	600	±900

U_C	Supply voltage (±5 %) [1]		±15	V
I_C	Current consumption		±15	mA
R_{INS}	Insulation resistance @ 500 V DC		> 1000	MΩ
U_{out}	Output voltage (Analog) @ $\pm I_{PN}$, R_L = 10 kΩ, T_A = 25 °C		±4	V
R_{out}	Output internal resistance	approx	100	Ω
R_L	Load resistance [2]		> 1	kΩ

Accuracy - Dynamic performance data

ε_{tot}	Total error @ I_{PN}, T_A = 25 °C (excluding offset)		< ±1	% of I_{PN}
ε_L	Linearity error [3] (0 ... $\pm I_{PN}$)		< ±1	% of I_{PN}
U_{OE}	Electrical offset voltage, T_A = 25 °C		< ±20	mV
U_{OM}	Hysteresis offset voltage @ I_P = 0, after an excursion of 1 × I_{PN}		< ±20	mV
TCU_{OE}	Temperature coefficient of U_{OE}	HAS 50-S	< ±2	mV/K
		HAS 100 ... 600-S	< ±1	mV/K
TCU_{out}	Temperature coefficient of U_{out} (% of reading)		< ±0.1	%/K
$t_{D\,90}$	Delay time to 90 % of I_{PN} [4]		< 3	µs
BW	Frequency bandwidth (−3 dB) [5]		DC ... 50	kHz

General data

T_A	Ambient operating temperature		−10 ... +80	°C
T_S	Ambient storage temperature		−25 ... +80	°C
m	Mass	approx	60	g
	Standards	UL	UL 508:2010	
		EMC	IEC 61000-6-2:2016	
			IEC 61800-3:2017 [6]	
		Safety	IEC 61010-1:2010	
		Environmental	IEC 61477-1:2012	
			IEC 61800-2:2012	

Notes: [1] Operating at ±12 V ≤ U_C < ±15 V will reduce the measuring range

[2] If the customer uses 1 kΩ of the load resistor, the primary current has to be limited as the nominal. To measure the full defined measuring range, the load resistor should be at minimum 10 kΩ

[3] Linearity data exclude the electrical offset

[4] For a di/dt = 50 A/µs

[5] Under small signals condition

[6] Regarding compliance towards IEC 61000-4-3 (IEC 61800-3:2017): variation of the offset between 390 MHz and 400 MHz with a field intensity of 10 [V/m].

Features

- Hall effect measuring principle
- Insulating plastic case made of polycarbonate PBT recognized according to UL 94-V0.

Advantages

- Easy mounting
- Low power consumption
- Small size and space saving
- Only one design for wide current ratings range
- High immunity to external interference.

Applications

- AC variable speed drives
- Static converters for DC motor drives
- Battery supplied applications
- Uninterruptible Power Supplies (UPS)
- Switched Mode Power Supplies (SMPS)
- Power supplies for welding applications.

Application domain

- Industrial.

15April2020/version 15

LEM reserves the right to carry out modifications on its transducers, in order to improve them, without prior notice

LEM International SA
Chemin des Aulx 8
1228 PLAN-LES-OUATES Switzerland
www.lem.com

Current Transducer HAS 50 ... 600-S

Insulation coordination

U_d	RMS voltage for AC insulation test, 50 Hz, 1 min	3.6	kV
U_{Ni}	Impulse withstand voltage 1.2/50 µs	> 6.6	kV
		Min	
d_{Cp}	Creepage distance	7.08	mm
d_{Cl}	Clearance	6.23	mm
CTI	Comparative tracking index (group IIIa)	275	

Applications examples

According to IEC 61010-1 standard and following conditions:

- Over voltage category OV 3
- Pollution degree PD2
- Non-uniform field

	IEC 61010-1
d_{Cp}, d_{Cl}, U_{Ni}	Nominal voltage
Basic insulation	600 V
Reinforced insulation	300 V

Safety

This transducer must be used in limited-energy secondary circuits according to IEC 61010-1.



This transducer must be used in electric/electronic equipment with respect to applicable standards and safety requirements in accordance with the manufacturer's operating instructions.



Caution, risk of electrical shock

When operating the transducer, certain parts of the module can carry hazardous voltage (eg. primary busbar, power supply).
Ignoring this warning can lead to injury and/or cause serious damage.
This transducer is a build-in device, whose conducting parts must be inaccessible after installation.
A protective housing or additional shield could be used.
Main supply must be able to be disconnected.

LEM reserves the right to carry out modifications on its transducers, in order to improve them, without prior notice

LEM International SA
Chemin des Aulx 8
1228 PLAN-LES-OUATES Switzerland
www.lem.com

Dimensions HAS 50 ... 600-S (in mm)

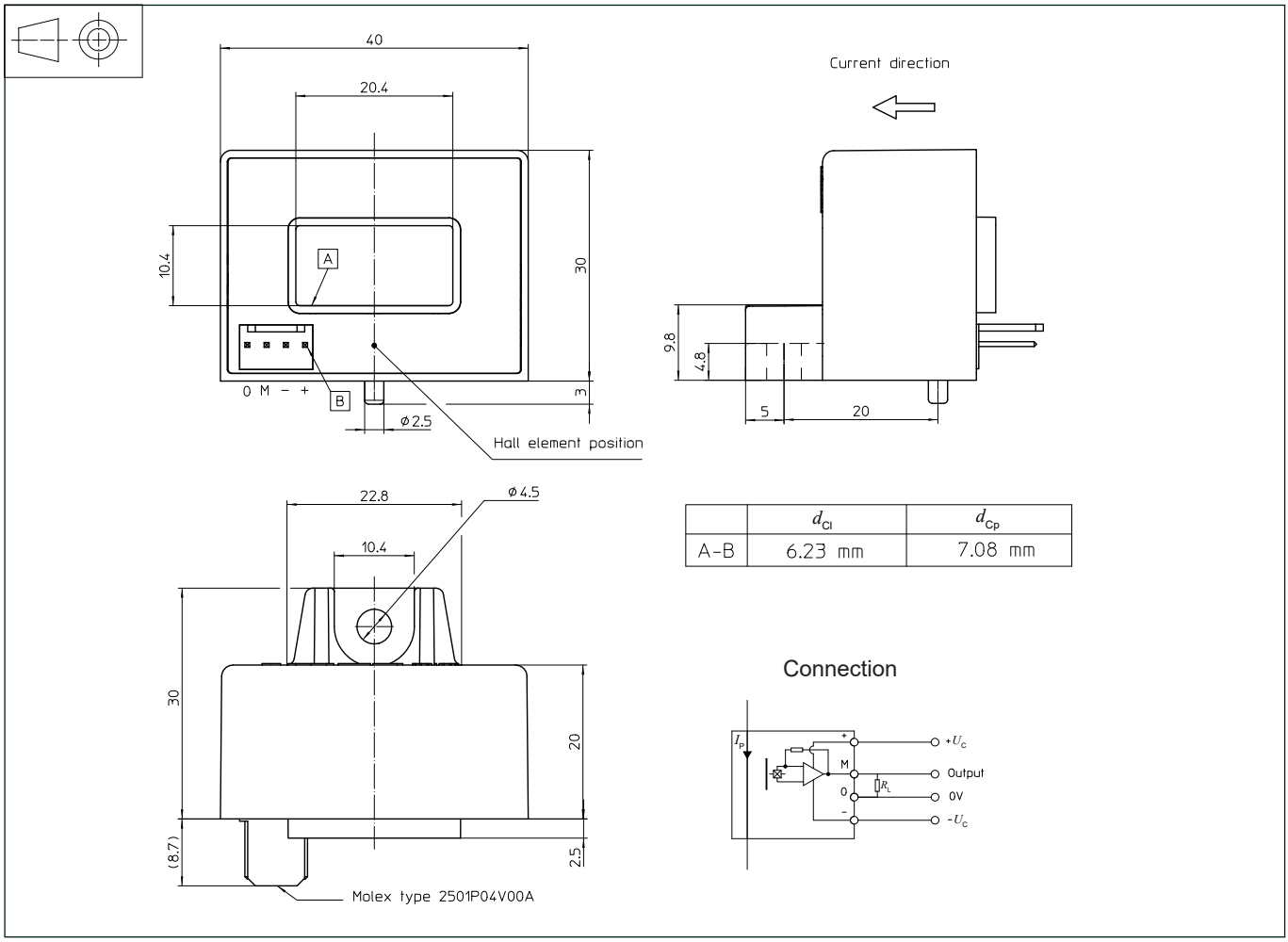

	d_{Cl}	d_{Cp}
A-B	6.23 mm	7.08 mm

Mechanical characteristics

- General tolerance ±0.5 mm
- Transducer fastening 1 hole ⌀ 4.5 mm
  1 M4 steel screw
  Recommended fastening torque 0.75 N·m (±10 %)
- Connection of secondary Molex type 2501P04V00A [1)]

Note: [1)] Recommanded mating connector : Molex 511910400 (housing) and 508029101 (contact).

Remarks

- U_{out} is positive when I_P flows in the direction of the arrow.
- Temperature of the primary conductor should not exceed 100 °C.
- Installation of the transducer must be done unless otherwise specified on the datasheet, according to LEM Transducer Generic Mounting Rules. Please refer to LEM document N°ANE120504 available on our Web site: **https://www.lem.com/en/file/3137/download/.**
- Dynamic performances (di/dt and delay time) are best with a single bar completely filling the primary hole.
- This is a standard model. For different versions (supply voltages, turns ratios, unidirectional measurements...), please contact us.

15April2020/version 15

LEM reserves the right to carry out modifications on its transducers, in order to improve them, without prior notice

LEM International SA
Chemin des Aulx 8
1228 PLAN-LES-OUATES Switzerland
www.lem.com