Features/Benefits

- ***Positive detent***
- ***Low profile***
- ***IR reflow to 260º solder profile***
- ***Surface and thru hole mounting***
- ***SPDT, DPDT, DP3T models***
- ***RoHS compliant***

Typical Applications

- ***Telecommunication products***
- ***Computer peripherals***
- ***Thermostat select switch***
- ***Instrumentations***

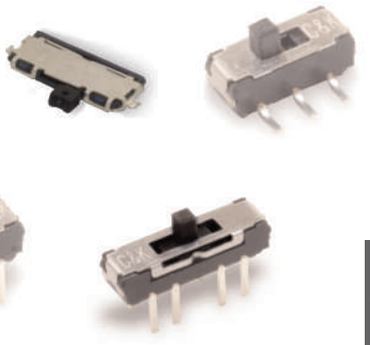

Specifications

CONTACT RATING: 6 VDC @ 0.3A
ELECTRICAL LIFE: 5,000 make-and-break cycles
CONTACT RESISTANCE: 70 m Ω max.
INSULATION RESISTANCE: 100 M Ω min. @ 500V.
DIELECTRIC STRENGTH: 500 VAC min. @ sea level.
OPERATING TEMPERATURE: -40ºC to +85ºC
STORAGE TEMPERATURE: -40ºC to +85ºC

NOTE: Specifications and materials listed above are for switches with standard options.
For information on specific and custom switches, consult Customer Service Center.

Materials

HOUSING: 4/6 nylon (UL94V-2), black.
ACTUATOR: 4/6 nylon (UL94V-2), black (some options white).
CONTACTS: Copper alloy, silver plated.
TERMINALS: Brass, silver plated

RIGHT ANGLE, PC THRU-HOLE

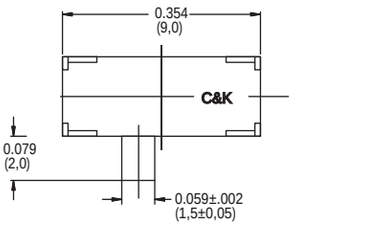

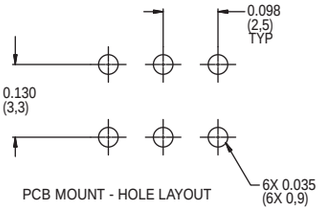



Part Number
JS202011AQN
DPDT

Shown in position b

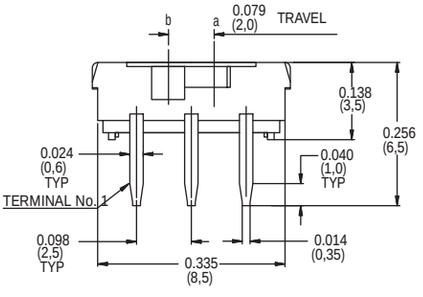

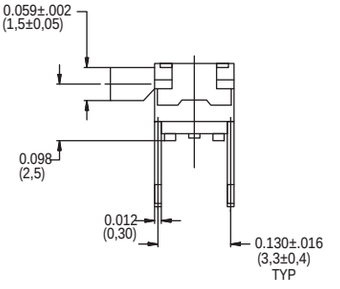

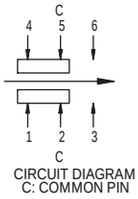

Shown in position b

JS Series
Sub-Miniature Slide Switches

RIGHT ANGLE, PC THRU-HOLE

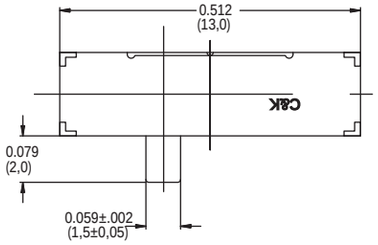

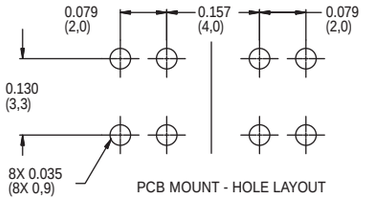



Part Number
JS203011AQN
DP3T

Shown in position b

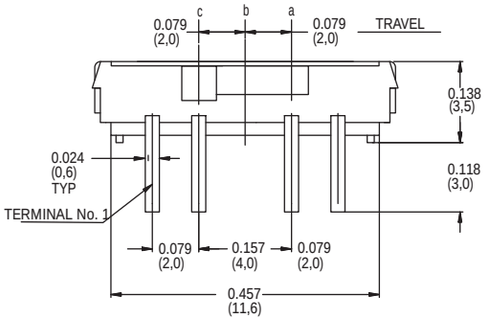

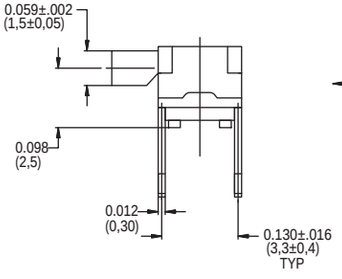

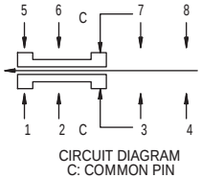

Shown in position c

PC THRU-HOLE

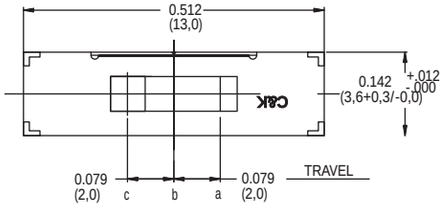

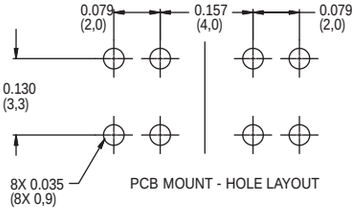

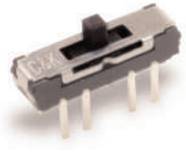

Part Number
JS203011CQN
DP3T

Shown in position b

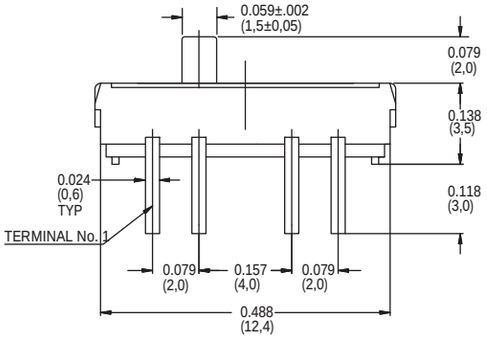

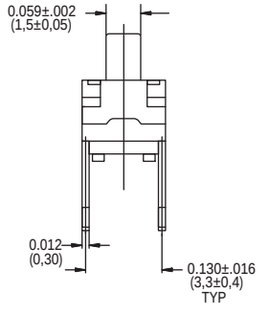

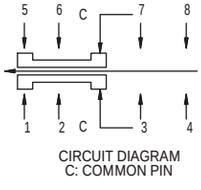

Shown in position c

Third Angle Projection

Dimensions are shown: Inch (mm)
Specifications and dimensions subject to change

PC THRU-HOLE

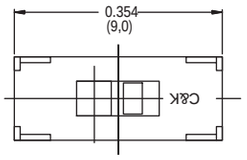

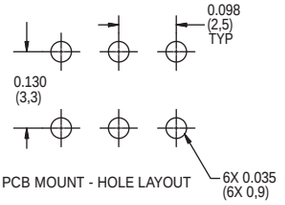



Part Number
JS202011CQN
DPDT

Shown in position a

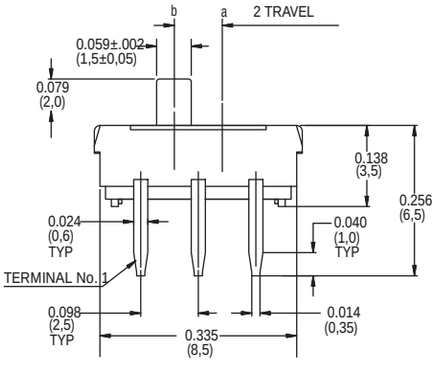

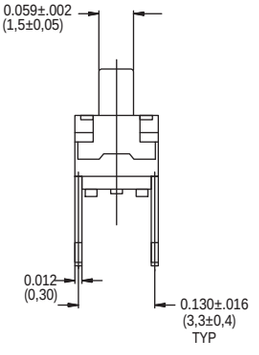

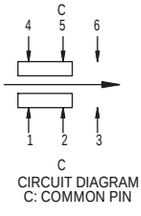

Shown in position b

SURFACE MOUNT



Part number
JS202011SCQN
DPDT

Shown in position b. Quantity per reel 1000

Available in tape & reel only, see page I-58

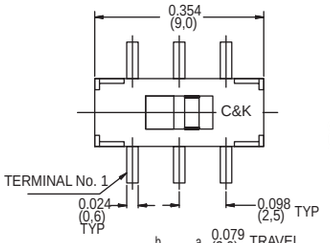

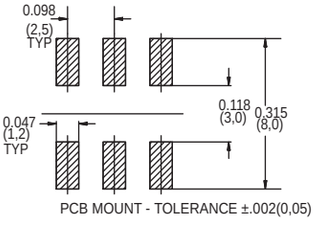

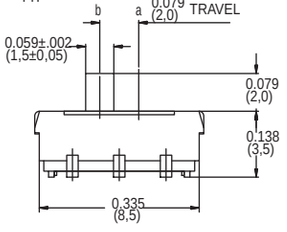

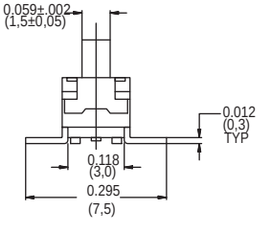

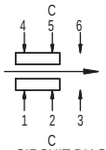

Shown in position b

Part number
JS203011SCQN
DP3T

Quantity per reel 900

Available in tape & reel only, see page I-60



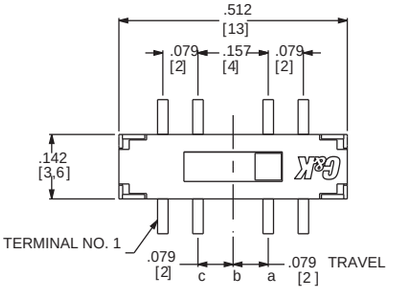

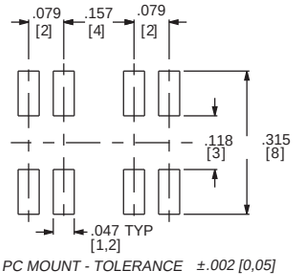

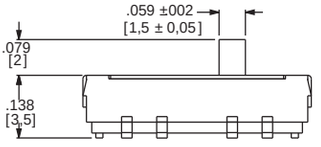

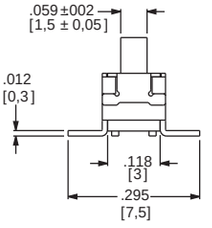

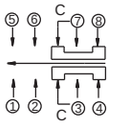

CIRCUIT DIAGRAM
C: COMMON PIN

Shown in position a

Third Angle Projection

Dimensions are shown: Inches (mm)
Specifications and dimensions subject to change

JS Series
Sub-Miniature Slide Switches

RIGHT ANGLE SURFACE MOUNT

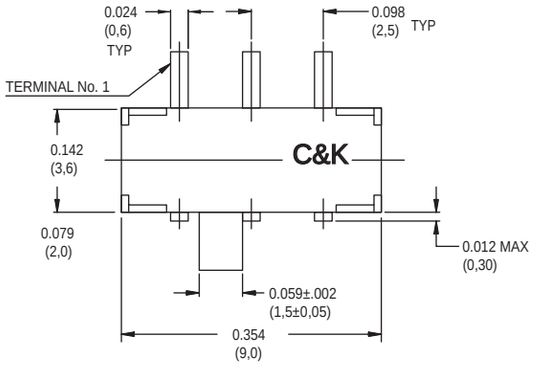

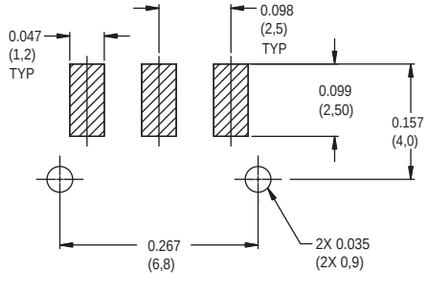

PCB MOUNT - HOLE LAYOUT



Part Number
JS102011SAQN
SPDT

Shown in position a

Available in tape & reel
only, see page I-59

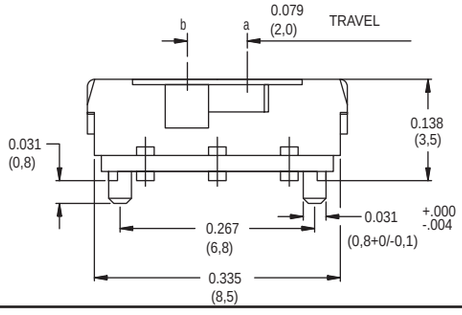

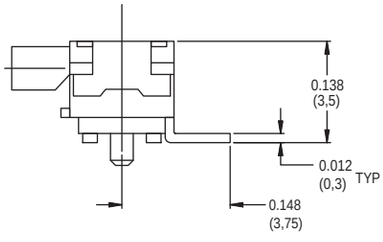

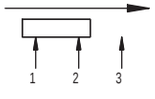

C
CIRCUIT DIAGRAM
C: COMMON PIN

Shown in position b

PC THRU-HOLE

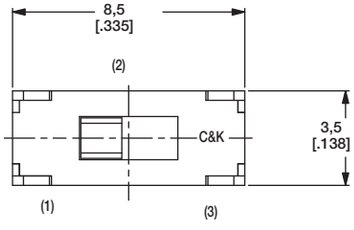

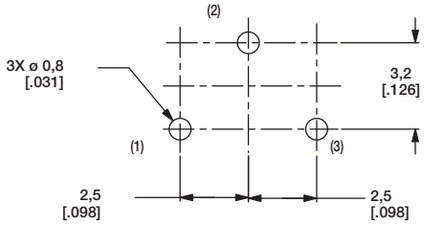

PCB LAYOUT RECOMMENDED



Part Number
JS102011CQN
SPDT

Shown in position a

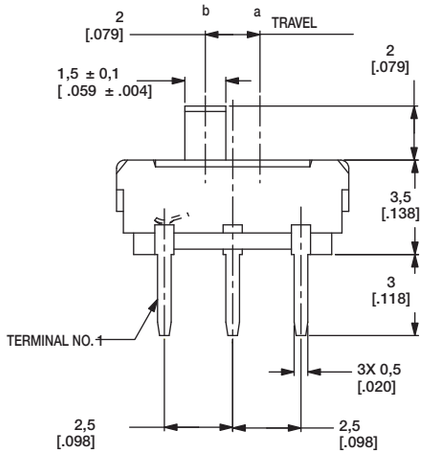

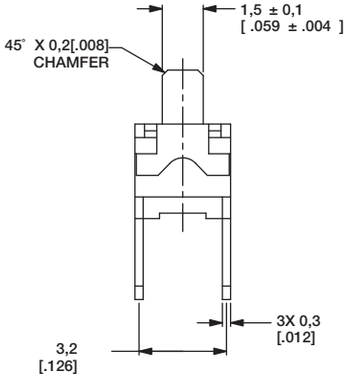

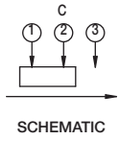

SCHEMATIC

Shown in position b

Third Angle Projection

Dimensions are shown: Inch (mm)
Specifications and dimensions subject to change

SURFACE MOUNT

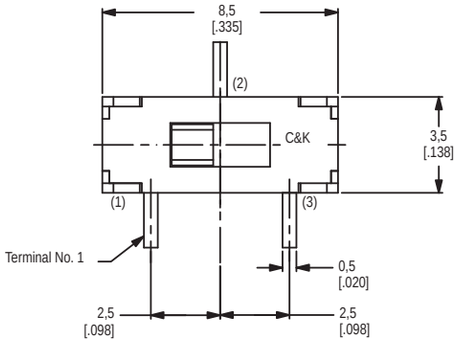

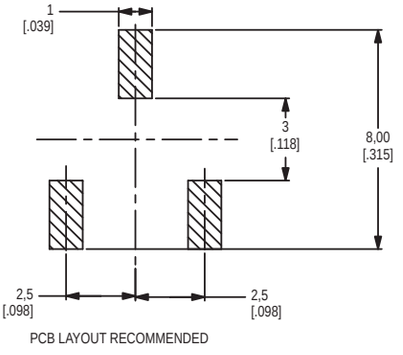

PCB LAYOUT RECOMMENDED



Part Number
JS102011SCQN
SPDT

Shown in position a

Available in tape & reel
only, see page I-59

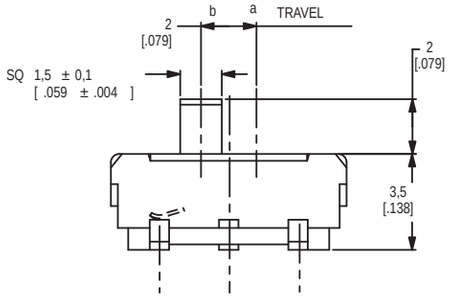

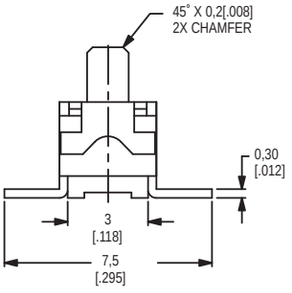

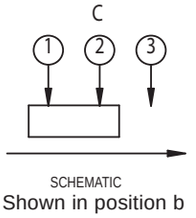

SCHEMATIC
Shown in position b

SURFACE MOUNT

NEW

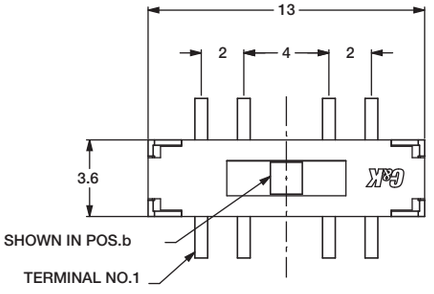

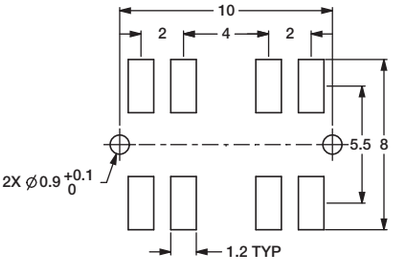

PC MOUNT - TOLERANCE ±.05

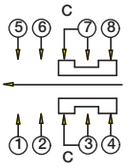

CIRCUIT DIAGRAM
C: COMMON PIN
BOTTOM VIEW

SWITCH FUNCTION		
POS.c	POS.b	POS.a
C&K	C&K	C&K
(MOM)	ON	ON
CONNECTED TERMINALS		
1-3,5-7	2-3,6-7	3-4,7-8

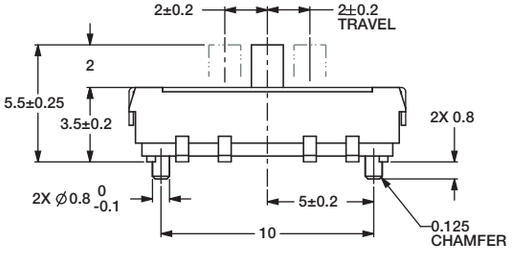

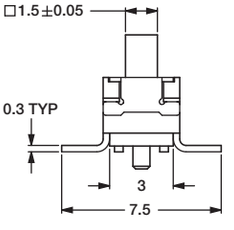



Part Number
JS207011SCQNR
DP3T

Shown in position b

Available in tape & reel
only, see page I-58

Third Angle
Projection

Dimensions are shown: Inches (mm)
Specifications and dimensions subject to change

JS Series
Sub-Miniature Slide Switches

PC THRU-HOLE

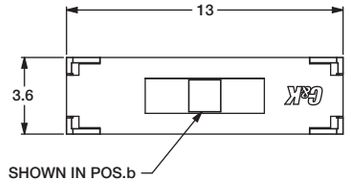

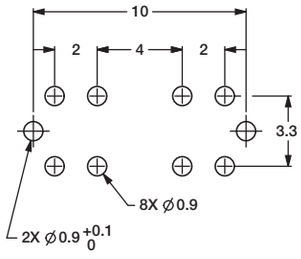

PC MOUNT - TOLERANCE ±.05

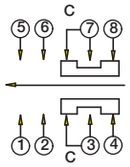

CIRCUIT DIAGRAM
C: COMMON PIN
BOTTOM VIEW

SWITCH FUNCTION		
POS.c	POS.b	POS.a
C&K	C&K	C&K
(MOM)	ON	ON
CONNECTED TERMINALS		
1-3,5-7	2-3,6-7	3-4,7-8

NEW



Part Number
JS207011CQNR
DP3T

Shown in position b

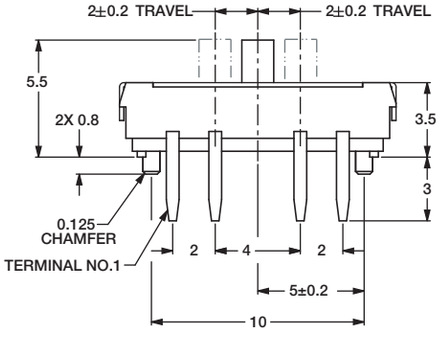

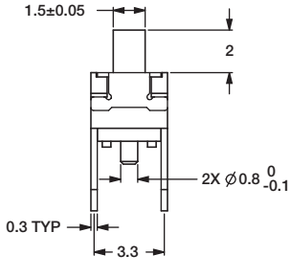

RIGHT ANGLE SURFACE MOUNT

NEW



Part Number
JS102011JAQN
SPDT

Shown in position

Available in tape & reel
only, see page I-59

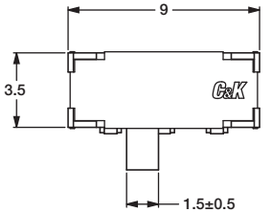

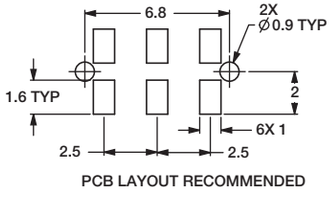

PCB LAYOUT RECOMMENDED

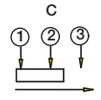

CIRCUIT DIAGRAM
C: COMMON PIN
BOTTOM VIEW

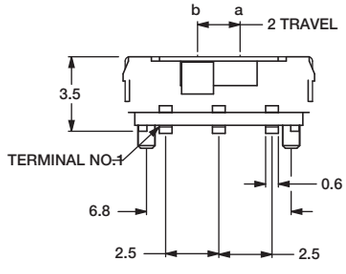

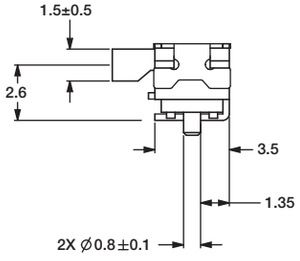

Third Angle Projection

Dimensions are shown: mm
Specifications and dimensions subject to change

VERTICAL MOUNT SMT - J BEND

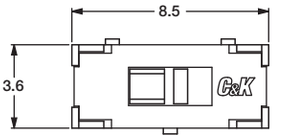

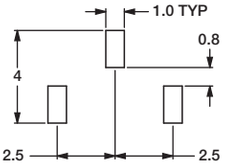

PCB LAYOUT RECOMMENDED



CIRCUIT DIAGRAM
C: COMMON PIN
BOTTOM VIEW

NEW



Part Number
JS102011JCQN
SPDT

Available in tape & reel
only, see page I-59

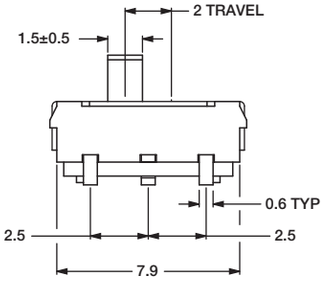

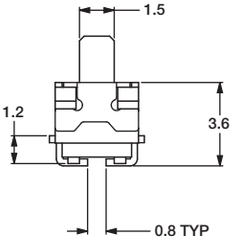

RIGHT ANGLE SURFACE MOUNT

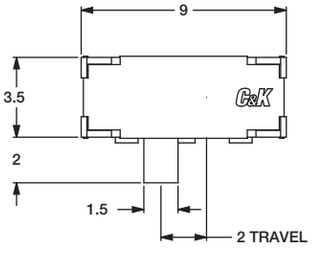

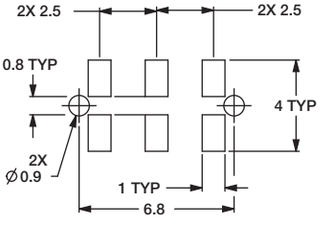

PCB LAYOUT RECOMMENDED

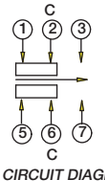

CIRCUIT DIAGRAM
C: COMMON PIN
BOTTOM VIEW

NEW



Part Number
JS202011JAQN
DPDT

Shown in position

Available in tape & reel
only, see page I-61

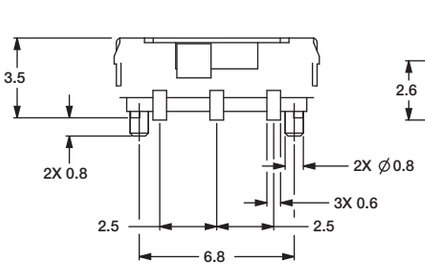

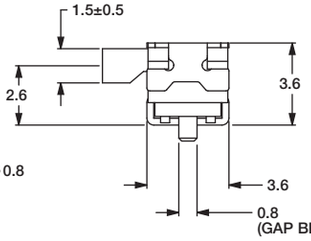

Third Angle Projection

Dimensions are shown: mm
Specifications and dimensions subject to change

VERTICAL MOUNT SMT - J BEND

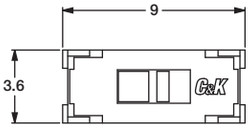

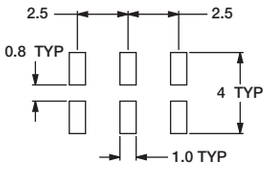

PCB LAYOUT RECOMMENDED

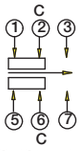

CIRCUIT DIAGRAM
C: COMMON PIN
BOTTOM VIEW

NEW



Part Number
JS202011JCQN
DPDT

Shown in position

Available in tape & reel
only, see page I-61

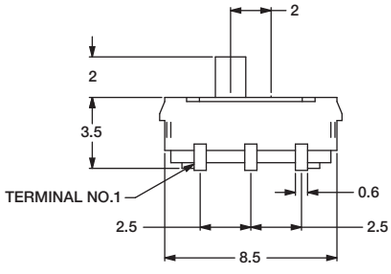

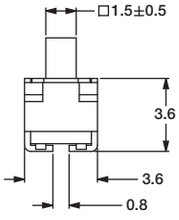

RIGHT ANGLE MOUNT SMT - J BEND

NEW



Part Number
JS203011JAQN
DP3T

Shown in position

Available in tape & reel
only, see page I-60

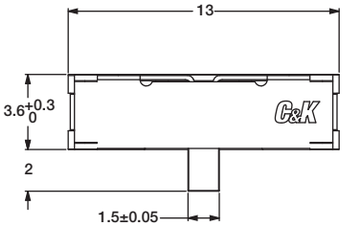

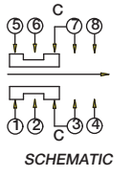

SCHEMATIC
C: COMMON PIN

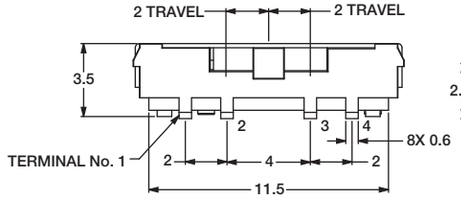

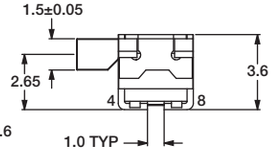

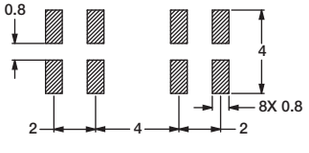

PCB LAYOUT RECOMMENDED

Third Angle Projection

Dimensions are shown: mm
Specifications and dimensions subject to change

VERTICAL MOUNT SMT - J BEND

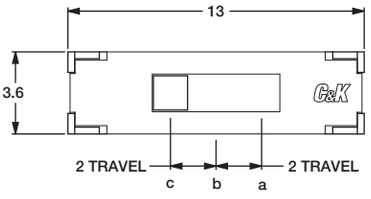

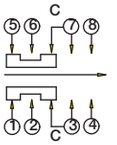

SCHEMATIC
C: COMMON PIN

NEW



Part Number
JS203011JCQN
DP3T

Available in tape & reel only, see page I-60

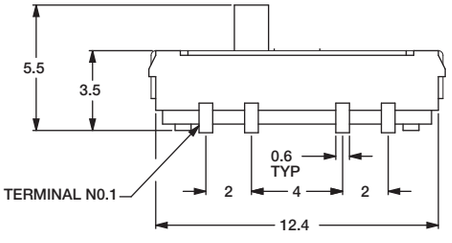

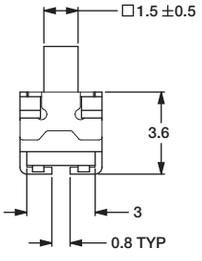

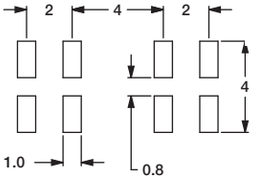

PCB LAYOUT RECOMMENDED

SURFACE MOUNT - J BEND

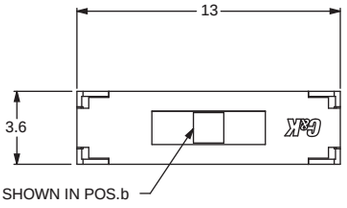

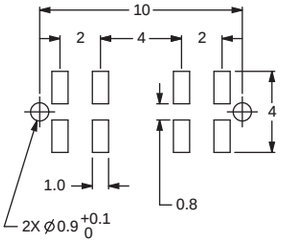

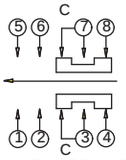

CIRCUIT DIAGRAM
C: COMMON PIN
BOTTOM VIEW

NEW



Part Number
JS207011JCQNR
SP3T

Available in tape & reel only, see page I-58

PC MOUNT - TOLERANCE ±.05

SWITCH FUNCTION		
POS.c	POS.b	POS.a
C&K	C&K	C&K
(MOM)	ON	ON
CONNECTED TERMINALS		
1-3,5-7	2-3,6-7	3-4,7-8

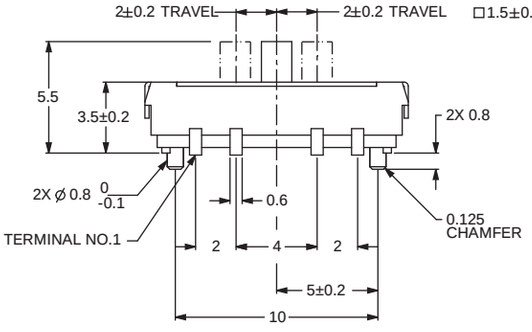

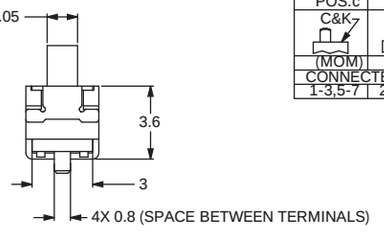

TAPE AND REEL FOR PART NUMBER JS207011SCQNR, JS207011JCQNR

Quantity per reel 800

PACKING DETAIL 800 PCS

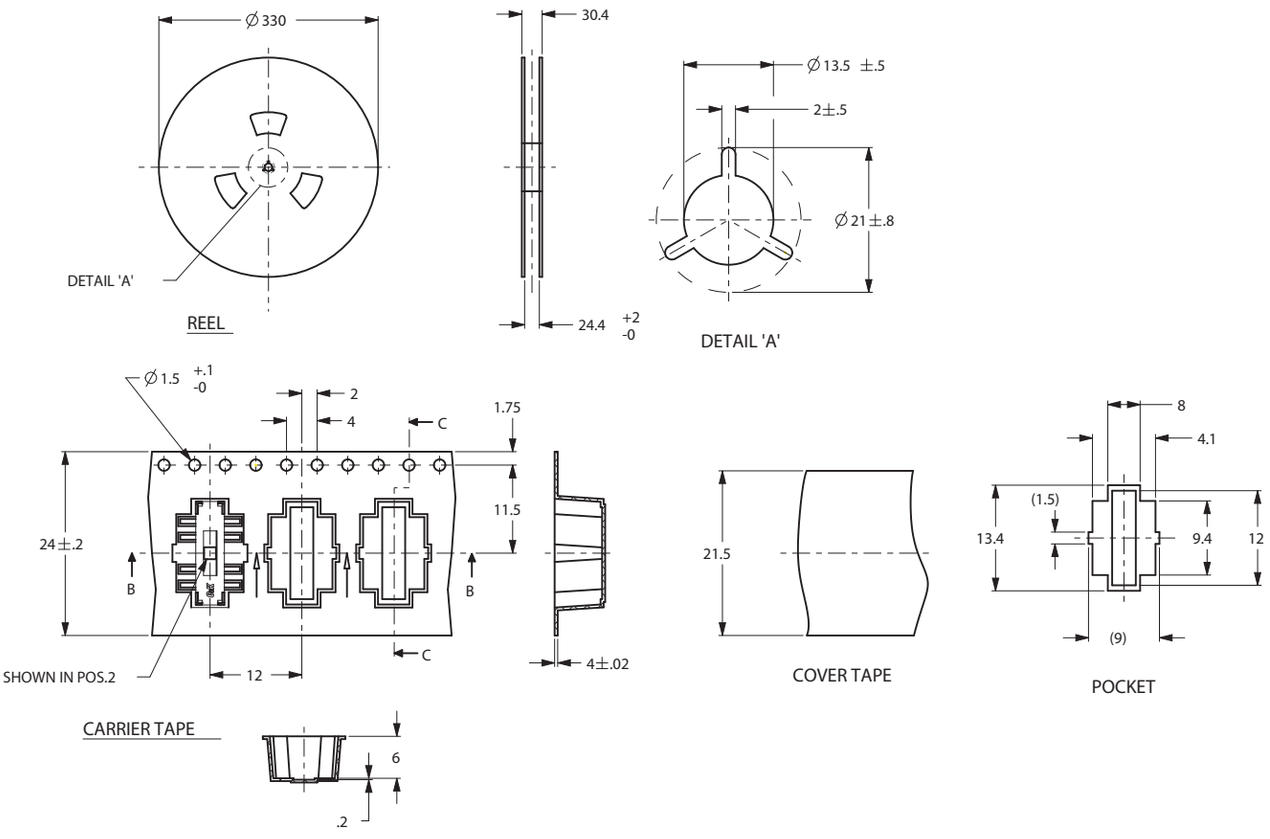

TAPE AND REEL FOR PART NUMBER JS202011SCQN

Quantity per reel 1000

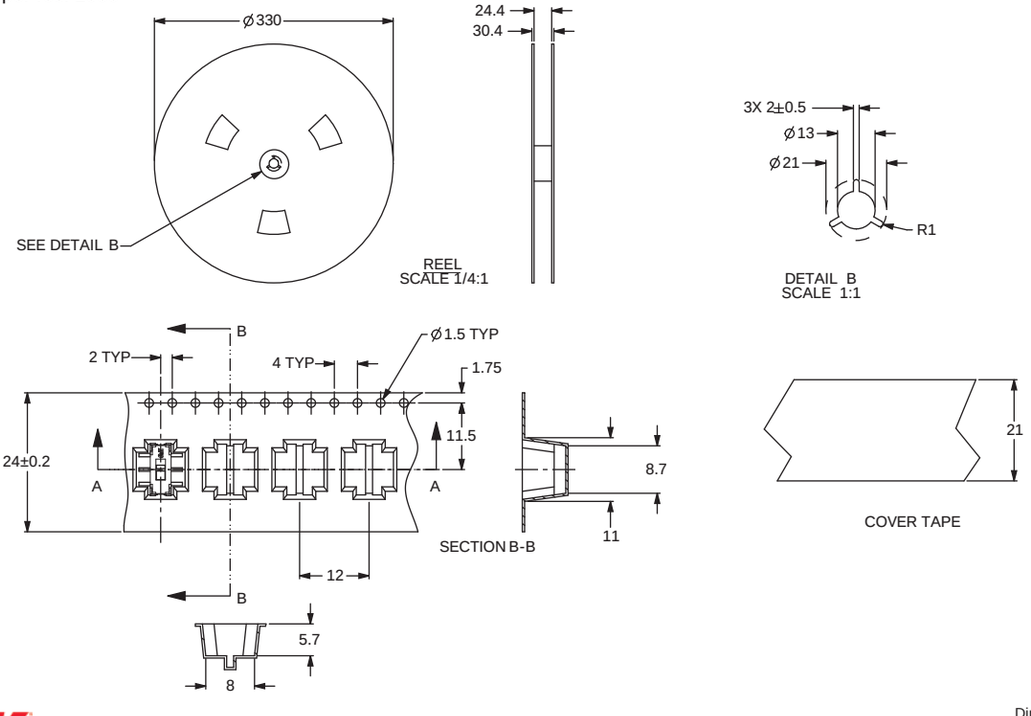

TAPE AND REEL FOR
PART NUMBER JS102011SCQN, JS102011JCQN
Quantity per reel 1000

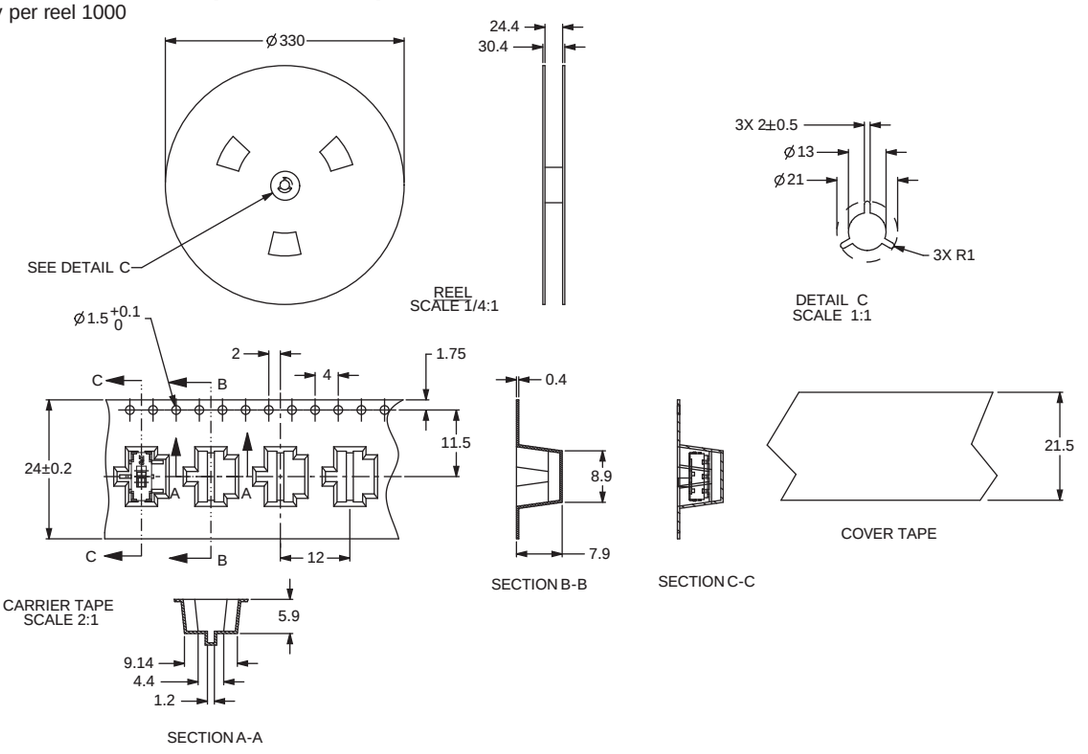

TAPE AND REEL FOR PART NUMBER JS102011SAQN, JS102011JAQN

Quantity per reel 1000

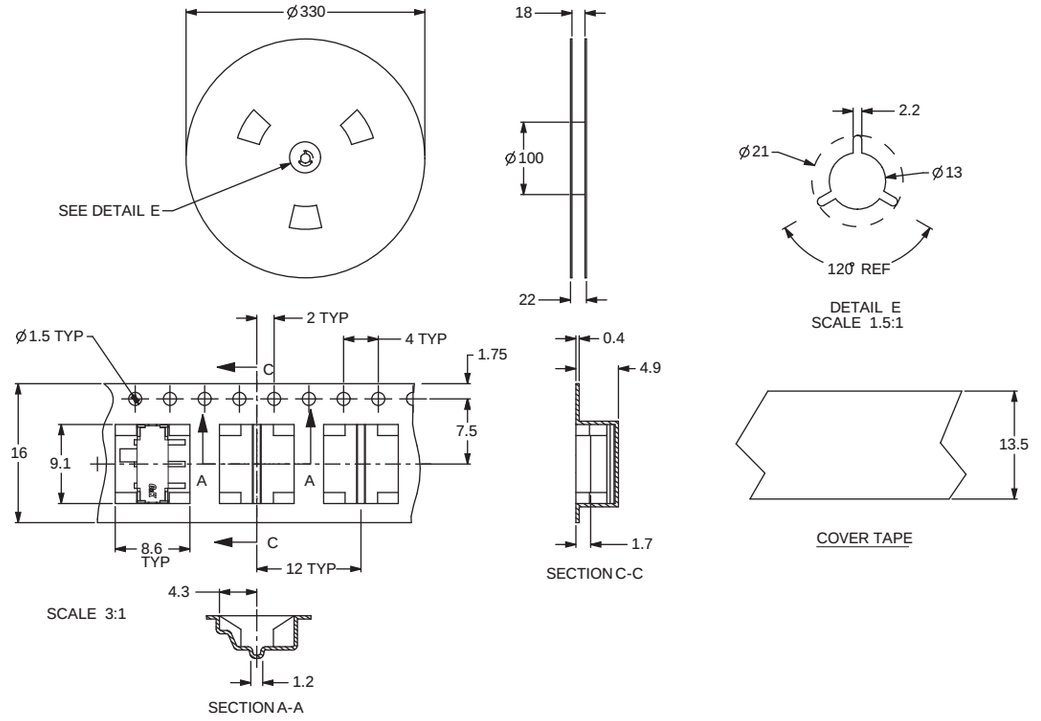

Third Angle Projection

Dimensions are shown: mm
Specifications and dimensions subject to change

TAPE AND REEL FOR PART NUMBER JS203011SCQN, JS203011JCQN
Quantity per reel 900

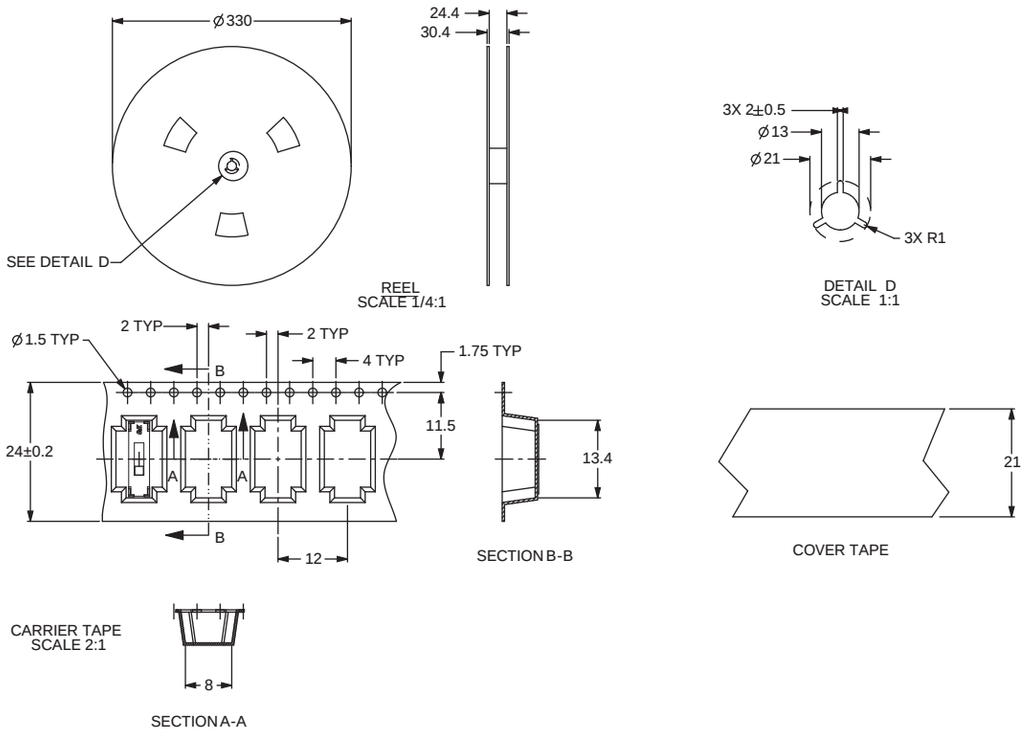

TAPE AND REEL FOR PART NUMBER JS203011JAQN

Quantity per reel 1000

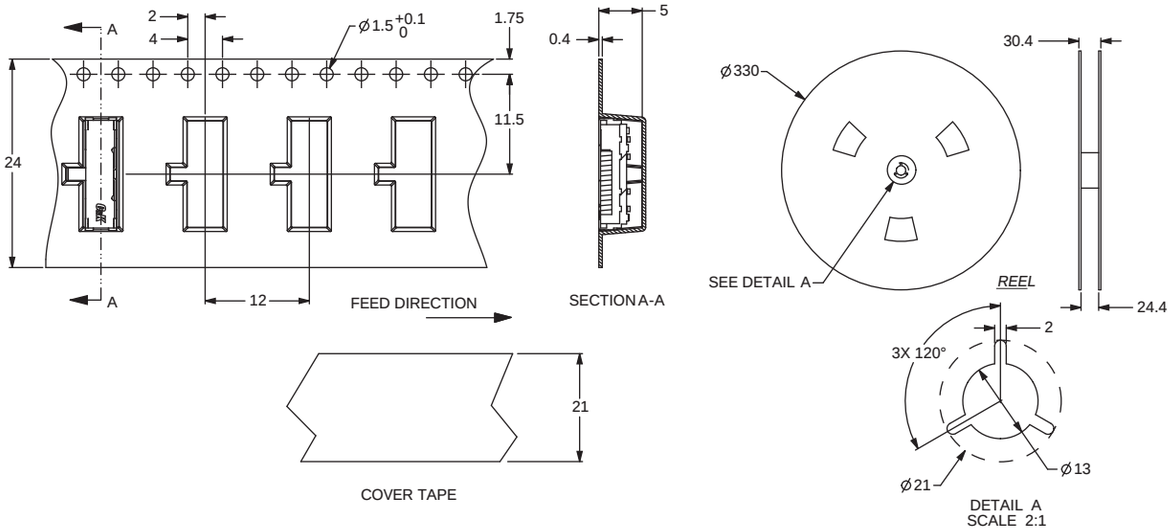

TAPE AND REEL FOR
PART NUMBER JS202011JCQN
Quantity per reel 1300

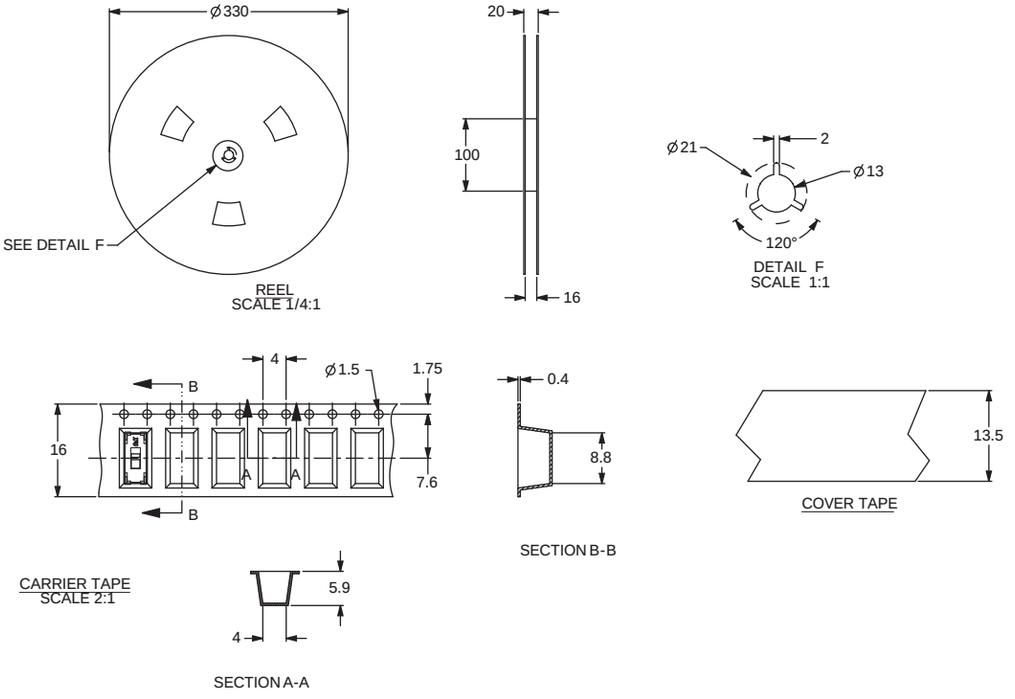

TAPE AND REEL FOR PART NUMBER JS202011JAQN
Quantity per reel 1000

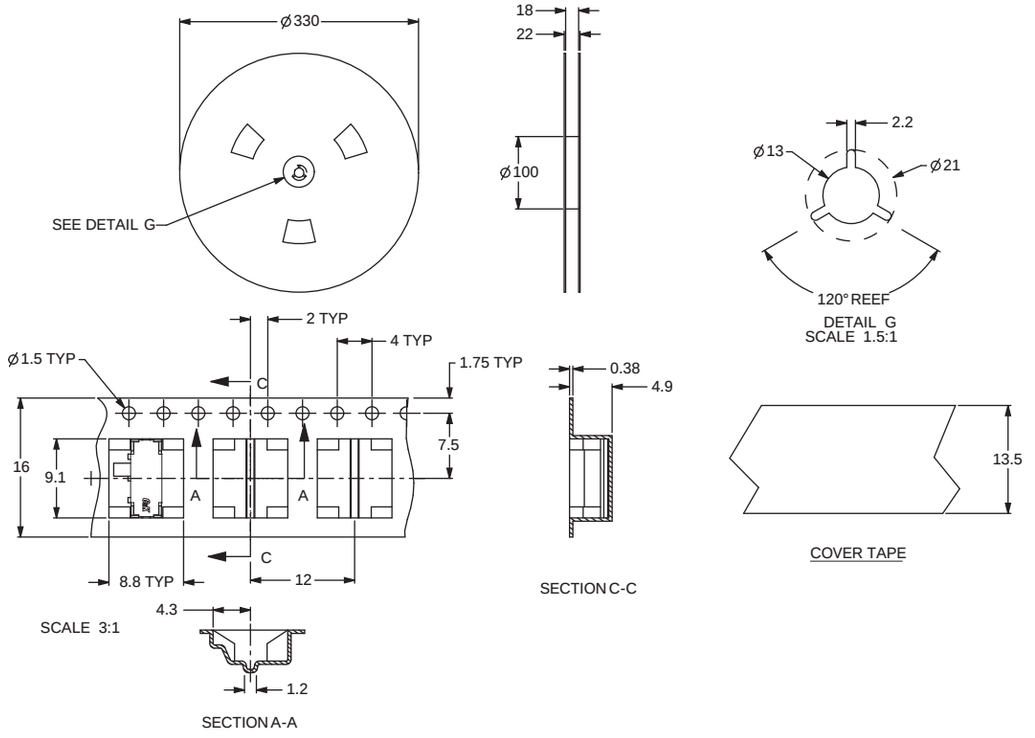

RIGHT ANGLE SURFACE MOUNT
LOW PROFILE .028±.004 (0.7±0.1) HIGH



Part Number
JS102000SAQN
SPDT

Specifications

CONTACT RATING: 5 VDC @ 1MA
ELECTRICAL LIFE: 15,000 cycles.
CONTACT RESISTANCE: <100 m ohms (initial) <200 m ohms (after processing).
INSULATION RESISTANCE: 100 m ohms @500 VDC.
DIELECTRIC STRENGTH: 250 VAC.
OPERATING TEMPERATURE: -40ºC to +85ºC

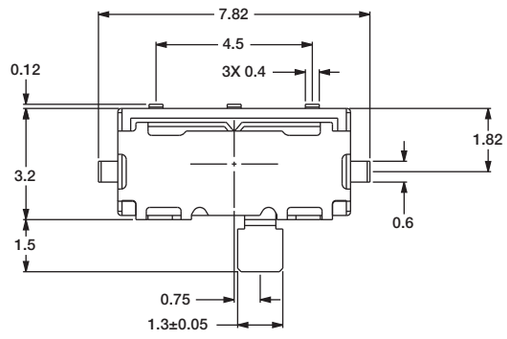

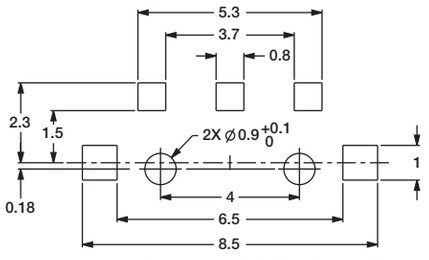

RECOMMENDED PC MOUNTING

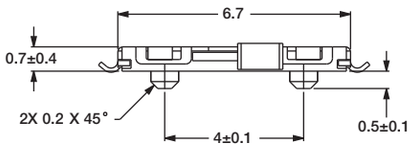

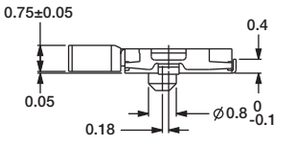

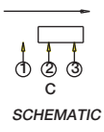

SCHEMATIC

TAPE AND REEL FOR PART NUMBER JS102000SAQN

Quantity per reel 4000

