DOUBLE-POLE POWER ROCKER SWITCH

YR Series

Features

- High current rating to 20 amps
- New style with rounded corners
- Lighted and non-lighted
- Maintained-action and momentary
- Available in a variety of colors
- Mechanical life: min. 50,000 operations

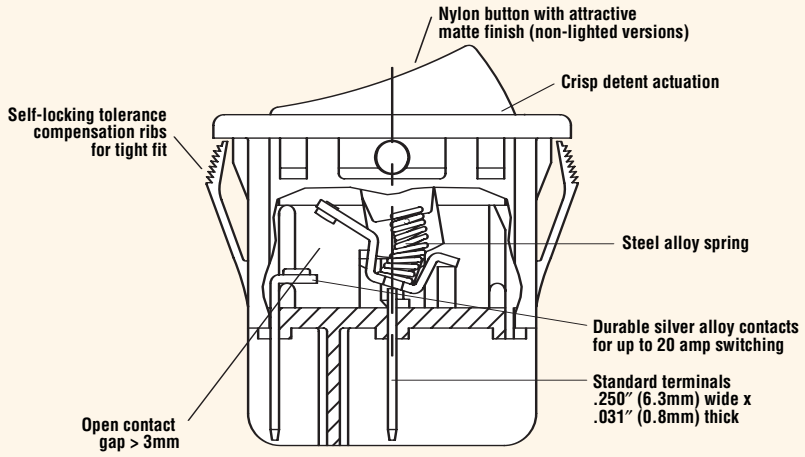

Electrical Ratings

Switch Series	EN61058 Rating	UL1054 Rating	Electrical Life at Rated Load According to VDE (Min. Operations)	According to UL (Min. Operations)
YR	16(4)A, 250V~, T125 1E4	20A, 125VAC; 16A 250VAC; 3/4HP 125/250VAC	10,000	6,000

Specifications

Electrical	
Dielectric Strength:	1000VAC for 1 minute
Insulation Resistance:	10^8 ohms min at 500VDC
Initial Contact Resistance:	0.020 ohms max
Temperature Rating:	-20°C to +105°C
Materials	
Actuator (non-lighted):	Nylon 66 94V-2
Actuator (lighted):	Polycarbonate
Case:	Nylon 66 94V-2
Spring:	Steel Wire
Contacts:	Silver Alloy
Movable Arm:	Silver-Plated Copper Alloy
Terminals:	Tin-Plated Copper Alloy



Dimensions inches (mm)

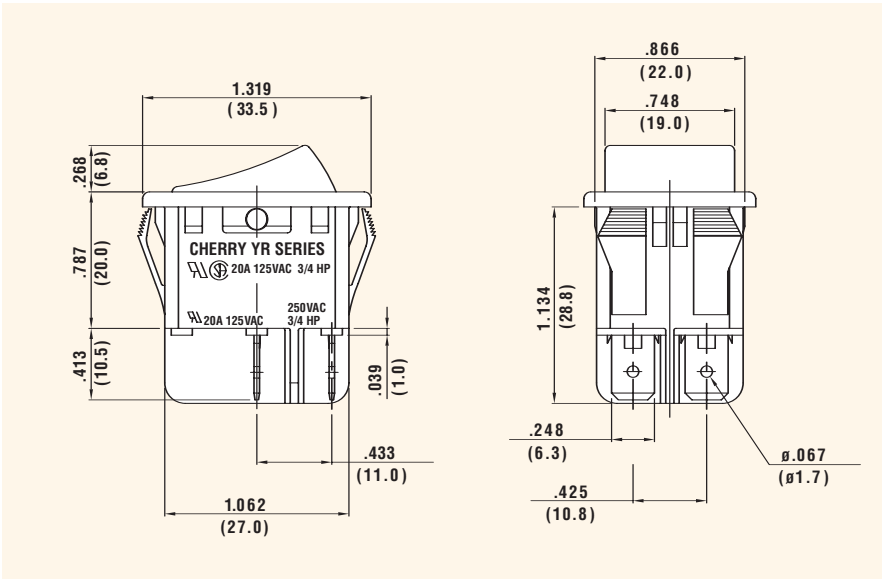

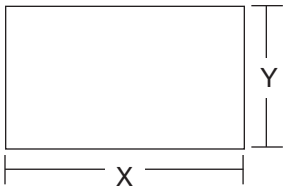

Z = Panel Thickness

Recommended Panel Cut-Out Dimensions

inches (mm)

Dim. Z	Dim. X	Dim. Y
0.030 to 0.049 (0.75 to 1.25)	1.181 (30.00)	0.866 (22.0)
0.049 to 0.079 (1.25 to 2.00)	1.189 (30.2)	0.866 (22.0)
0.079 to 0.118 (2.00 to 3.00)	1.201 (30.5)	0.866 (22.0)

Examples of Common Part Numbers and Descriptions inches (mm)

Part Number	Circuitry	Switch Function	Terminal Type	Actuator/ Housing Color	Legend Marking
YRM32F2FBBNN	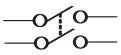	On – Off	0.250 (6.3) Quick-Connect	Black/Black	
YRM33F2BBBNN	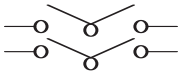	On – On	0.250 (6.3) Quick-Connect	Black/Black	
YRM32F2BBRLN	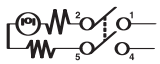	On – Off/Lighted	0.250 (6.3) Quick-Connect	Red/Black	

Ordering Information

YR **M** **3** **2** **F** **2** **F** **B** **B** **N** **N**

Series

Code	Circuitry
2	Single-Pole
3	Double-Pole

Code	Switch Function
2	On – Off
3	On – On
5	(On) – Off
6	(On) – On

Code	Actuator Type
2	Curve

Code	Housing Color
E	Charcoal Grey
Y	Grey
B	Black
W	White
C	Brown

Code	Lighted
N	Non-Lighted
L	Lighted (Bulb 125VAC)
E	Lighted (Bulb 250VAC)
F	Lighted 5VDC Incandescent
G	Lighted 6VDC Incandescent
H	Lighted 12VDC Incandescent

Code	Contact Rating
M	20A, 125VAC; 16A, 250VAC; 3/4HP125/250VAC (UL/CSA) 16(4)A, 250V~, T125 1E4 (VDE)

Code	Actuator Marking
B	Blank
C	LO HI
D	OFF ON
E	O I
F	O —
G	•

Code	Actuator Color
Y	Grey
B	Black
G	Green
A	Amber
R	Red
W	White
C	Brown
E	Charcoal Grey

Code	Splashproof
N	No Rocker Boot
S	Rocker Boot

Code	Terminal Type inches (mm)
A	0.187 (4.8) QC
F	0.250 (6.3) QC
S	0.250 (6.3) M3 Tapped Screw
T	0.250 (6.3) Solder Tag

Specifications subject to change without notice.