MURR ELEKTRONIK
stay connected

M8 female recept. A-cod. front

PP-wires 4x0.25 0.2m

Flange female
M8, 4-pole
Front mounting
with multi-strand wire

Link to Product

Illustration



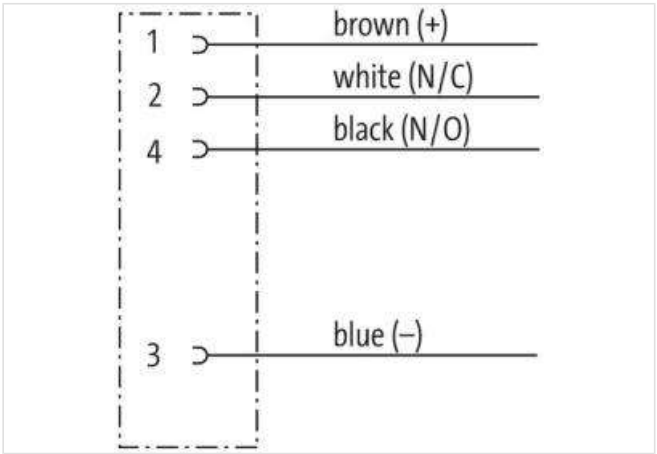

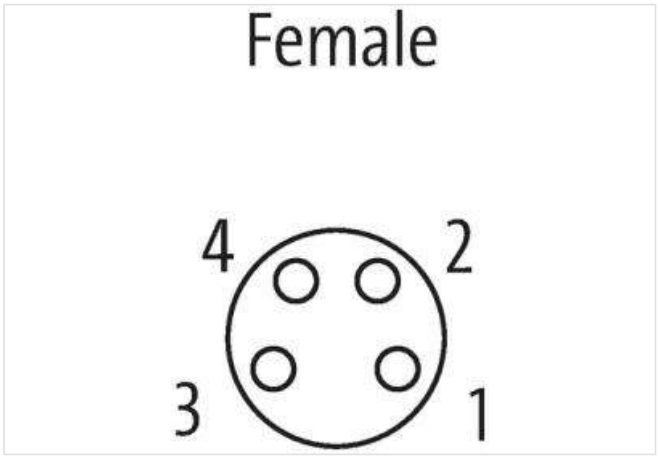

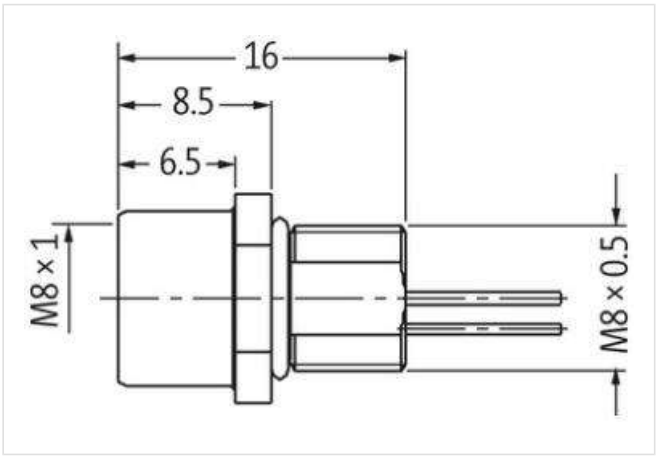

Product may differ from Image

Cable length	0,2 m
Side 1	
Tightening torque	0,4 Nm
Mounting method	inserted, screwed
Family construction form	M8

The information in this Product-PDF has been compiled with the utmost care.
Liability for the correctness completeness and topicality of the information is restricted to gross negligence. Version: 2024-01-31

MURR ELEKTRONIK
stay connected

Thread	M8 x 1
Material	Brass
Degree of protection (EN IEC 60529)	IP67
Commercial data	
ECLASS-6.0	27279220
ECLASS-6.1	27279220
ECLASS-7.0	27440103
ECLASS-8.0	27440103
ECLASS-9.0	27440103
ECLASS-10.1	27440103
ECLASS-11.1	27440103
ECLASS-12.0	27440103
ETIM-5.0	EC001855
customs tariff number	85444290
GTIN	4048879407663
Packaging unit	1
Electrical data | Supply	
Operating voltage AC max.	50 V
Operating voltage DC max.	60 V
Current operating per contact max.	4 A
Installation | Connection	
Mounting set	M8 x 1
Device protection | Electrical	
Protection NEMA	3, 4, 6P
Additional condition protection degree	inserted, screwed
Rated surge voltage	1,5 kV
Mechanical data | Material data	
Coating of fitting	nickel plated
Material screw connection	Brass
Mechanical data | Mounting data	
Mounting method	Schraubgewinde
Looking techniques	Schraubgewinde
Environmental characteristics | Climatic	
Operating temperature min.	-25 °C
Operating temperature max.	85 °C
Additional condition temperature range	depending on cable quality
Conformities, approvals	
UL 50E	yes
Cable	
No./diameter of wires	4× 0.25 mm²
Wire isolation	PP (br, bk, bl, wh)
Outer Ø	1.1 mm ±5%
Cable number	969
Temperature range (fixed)	-40...+90 °C
Temperature range (mobile)	-25...+90 °C
Bend radius (fixed)	5× outer Ø

The information in this Product-PDF has been compiled with the utmost care.
Liability for the correctness completeness and topicality of the information is restricted to gross negligence. Version: 2024-01-31