Footswitches with two pedals

F2

Protection class IP 65



Designation	F2-U1Z/U1Z		F2-U2Z/U2Z	
Part number	**606.2110.013**		**606.2220.015**	
Circuit diagram	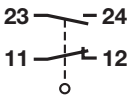	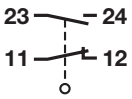	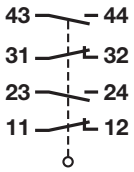	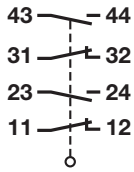
Slow make & break/snap action	●/–	●/–	●/–	●/–
Pressure point	–	–	–	–
Latching switch	–	–	–	–
Potentiometer	–	–	–	–
Pedal interlocking	–	–	–	–
Emergency stop function	–	–	–	–
Power contactor	–	–	–	–
Voltage max.	500 V AC		500 V AC	
Permanent current max.	10 A		10 A	
In-rush current complies with standards	●		●	
IEC 947-5-1 AC 15/DC 13				
Switching frequency max.	50/min.		50/min.	
Mechanical life – number of switching actions	10 x 10^6		10 x 10^6	
Mechanical life – number of revolutions	–		–	
Operating temperature min./max.	–30 °C/+80 °C		–30 °C/+80 °C	
	–22 °F/+176 °F		–22 °F/+176 °F	
Approvals	BG, CSA, UL		BG, CSA, UL	
Cable entry	1 x M 20		1 x M 20	
Weight	1.70 kg/3.7 lb		1.70 kg/3.7 lb	
Delivery: ex-stock/built to order	●/–		●/–	

All dimensions in mm (inch)

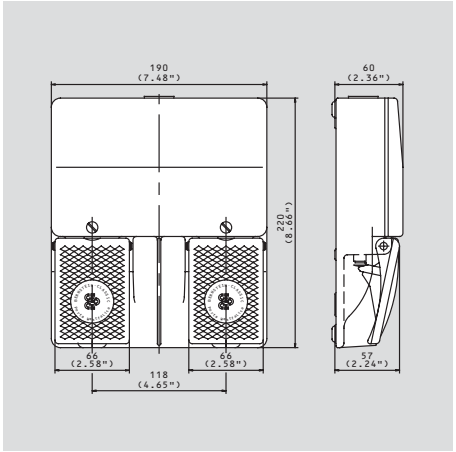

Footswitches with two pedals (guarded) F2 UN

With three pedals F3

With three pedals (guarded) F3 UN

Protection class IP 65



Designation	F2-U1Z/U1Z UN	F2-SU1Z/SU1Z UN	F2-U2Z/U2Z UN	F2-U2ZD/U2ZD UN
Part number	**606.2610.014**	**606.2830.022**	**606.2720.016**	**606.2720.020**
Circuit diagram	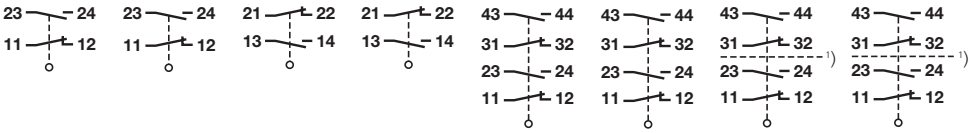			
[1]) pressure point				
Slow make & break/snap action	●/– ●/–	–/● –/●	●/– ●/–	●/– ●/–
Pressure point	– –	– –	– –	● ●
Latching switch	– –	– –	– –	– –
Potentiometer	– –	– –	– –	– –
Pedal interlocking	– –	– –	– –	– –
Emergency stop function	– –	– –	– –	– –
Power contactor	– –	– –	– –	– –
Voltage max.	500 V AC	500 V AC	500 V AC	500 V AC
Permanent current max.	10 A	10 A	10 A	10 A
In-rush current complies with standards IEC 947-5-1 AC 15/DC 13	●	●	●	●
Switching frequency max.	50/min.	50/min.	50/min.	50/min.
Mechanical life – number of switching actions	10 x 10^6	10 x 10^6	10 x 10^6	10 x 10^6
Mechanical life – number of revolutions	–	–	–	–
Operating temperature min./max.	–30 °C/+80 °C –22 °F/+176 °F	–30 °C/+80 °C –22 °F/+176 °F	–30 °C/+80 °C –22 °F/+176 °F	–30 °C/+80 °C –22 °F/+176 °F
Approvals	BG, CSA, UL	BG, CSA, UL	BG, CSA, UL	BG, CSA, UL
Cable entry	1 x M 20	1 x M 20	1 x M 20	1 x M 20
Weight	2.60 kg/5.7 lb	2.60 kg/5.7 lb	2.60 kg/5.7 lb	2.80 kg/6.2 lb
Delivery: ex-stock/built to order	●/–	●/–	●/–	●/–

All dimensions in mm (inch)

