Safety Controller
Series SCx

Description **SCx-I-16**	Article number **6075772218**

Safety input module 16 inputs (4 convertible)



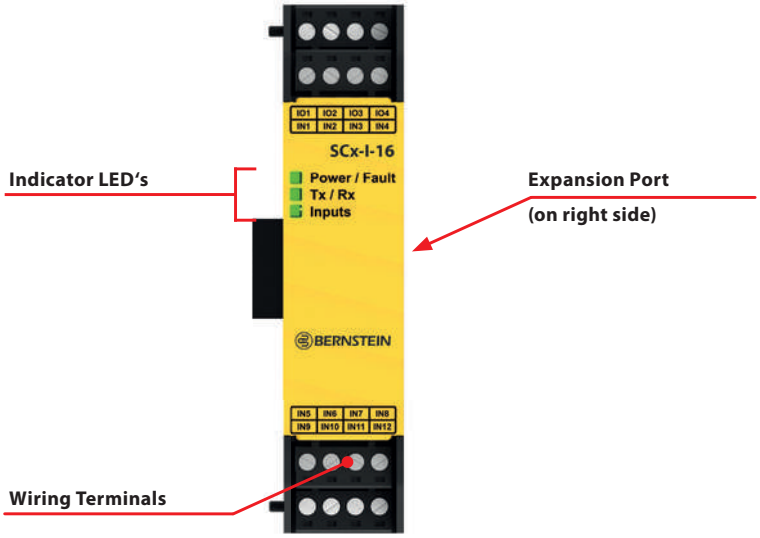

Electrical Data		
Sourcing voltage		
	Voltage	24 V DC ± 20 % (incl. ripple)
	Current	100 mA no load
BUS Current		0,09 A no Load; 0,41 A maximum Load
Convertible E/A		
	Sourcing current	≤ 80 mA (overcurrent protection)
	Test Pulses	1 ms every 25 to 75 ms
Safety Inputs (and Convertible E/A when used as inputs)		
Input On threshold		> 15 V DC (guaranteed on) ≤ 30 V DC
Input Off threshold		< 5 V DC and < 2 mA, –3 V DC min.
Input On Current		5 mA typical at 24 V DC, 50 mA peak contact cleaning current at 24 V DC
Input lead resistance		300 Ω maximum (150 Ω per lead)
Input requirements for a 4-wire Safety Mat		· Maximum capacity between plates: 0,22 µF[1] · Maximum capacity between bottom plate and ground: 0,22 µF[1] · Maximum resistance between the 2 input terminals of one plate: 20 Ω

Mechanical Data	
Operating Conditions	
Temperature	0 °C to +55 °C
Storage Temperature	–30 °C to +65 °C
Humidity	90 % at +50 °C maximum relative humidity (non-condensing)
Operating Altitude	2000 m maximum (6562 ft maximum)
Protection class	IP20 (NEMA 1), for use in enclosures to IP54 (NEMA 3) or higher
Mechanical Stress	
Shock	15 g for 11 ms, half sine, 18 shocks total (per IEC 61131-2)
Vibration	3,5 mm occasional / 1,75 mm continuous at 5 Hz to 9 Hz, 1,0 g occasional and 0,5 g continuous at 9 Hz to 150 Hz: all at 10 sweep cycles per axis (per IEC 61131-2)

Supply Wiring (AWG)	Required Overcurrent Protection (Amps)
0,50/20	5,0
0,32/22	3,0
0,20/24	2,0
0,13/26	1,0
0,08/28	0,8
0,05/30	0,5

Overcurrent protection is required to be provided by end product application per the supplied table.
Overcurrent protection may be provided with external fusing or via Current Limiting, Class 2 Power Supply.
Power supply wires < 0.20mm² (24 AWG) must not be connected.
For additional product support, go to www.bernstein.eu.

Standards	
	EN ISO 12100
	ISO 13857
	ISO13850
	EN 574
	IEC6206
	EN ISO 13849-1
	ISO 13855
	ISO 14119
	EN 60204-1
	IEC 61496
	IEC 60529
	IEC 60947-1
	IEC 60947-5-1
	IEC 60947-5-5
	IEC 61508
	IEC 62046

Safety Ratings	
	Category 4, PL e (EN ISO 13849)
	SIL CL 3 (IEC 62061, IEC 61508)

Safety characteristics	
PFH (1/H)	4×10^{-10}
Proof Test Interval	20 years

EU-Conformity	
	according to directive 2006/42/EG (Safety-of-Machinery-Directive)
	according to directive 2014/30/EU (EMV-Richtlinie)
	2012/19/EU (EU-WEEE II); WEEE-Reg. No. DE 50560927

Approvals	
	$_{c}UL_{us}$