Max. 930 m³/h

S-Force

DC axial fans

Ø 172 x 51 mm



- **Material:** Housing: Die-cast aluminum
  Impeller: GRP[1] (PA)
- **Direction of air flow:** Exhaust over struts
- **Direction of rotation:** Counterclockwise, looking towards rotor
- **Connection:** Via single wires AWG 18, 20 or AWG 22, TR 64, speed signal and control input AWG 22
- **Highlights:** Highly efficient and smoothly operating 3-phase fan drive
  Housing with grounding lug for screw M4 x 8 (Torx)
- **Weight:** 910 g

1) Fiberglass-reinforced plastic

- **Possible special versions:**
  (See chapter DC fans - specials)
  - Speed signal
  - Go / NoGo alarm
  - Alarm with speed limit
  - External temperature sensor
  - Internal temperature sensor
  - PWM control input (standard)
  - Analog control input
  - Multi-option control input
  - Moisture protection
  - Salt spray protection
  - Degree of protection: IP 54

Series 6300 TD
VWS0148XULDS

Nominal data

Type	Air flow m³/h	Air flow cfm	Nominal voltage VDC	Voltage range VDC	Sound pressure level dB(A)	Sound power level Bel(A)	Sintec sleeve bearings □ / Ball bearings ■	Power consumption* Watts	Nominal speed rpm⁻¹	Temperature range °C	Service life L_{10} (40 °C) ebm-papst standard / Service life L_{10} (T_{max}) ebm-papst standard Hours	Life expectancy L_{10IPC} (40 °C) see page 15 Hours	Curve
6312/2 TDHP	600	353	**12**	8...16	60	7.3	■	40	5 500	-20...+70	75 000 / 37 500	127 500	②
6314/2 TDHP-298	600	353	**24**	16...30	60	7.3	■	42	5 500	-20...+65	75 000 / 42 500	127 500	①
6314/2 TDHP	600	353	**24**	16...36	60	7.3	■	40	5 500	-20...+75	75 000 / 30 000	127 500	②
6314/2 TDHHP	710	418	**24**	16...36	69	7.9	■	67	7 000	-20...+75	62 500 / 25 000	105 000	③
6314/2 TDH4P	930	545	**24**	16...36	75	8.4	■	150	9 200	-20...+75	52 500 / 20 000	87 500	④
6318/2 TDHP-299	600	353	**48**	36...60	60	7.3	■	42	5 500	-20...+65	75 000 / 42 500	127 500	①
6318/2 TDHP	600	353	**48**	36...72	60	7.3	■	40	5 500	-20...+75	75 000 / 30 000	127 500	②
6318/2 TDHHP	710	418	**48**	36...72	69	7.9	■	67	7 000	-20...+75	62 500 / 25 000	105 000	③
6318/2 TDH4P	930	545	**48**	36...72	75	8.4	■	150	9 200	-20...+75	52 500 / 20 000	87 500	⑤

Subject to change

Speed control range from 1000 rpm⁻¹ up to maximum nominal speed.
Standstill at 0 % PWM, maximum speed if control cable is interrupted.
* Power consumption at free air flow. These values can be significantly higher in the operating point.

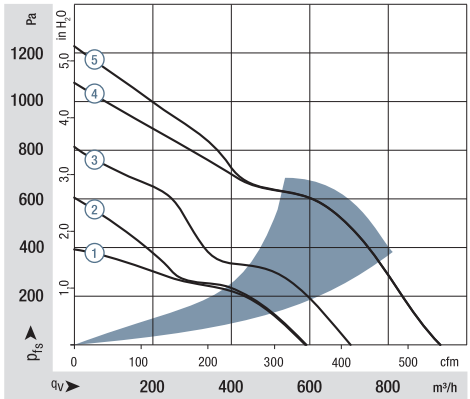

*** Power consumption – in operation**

Fan type	optimum operating range (W)
6318/2 TDHHP	115
6318/2 TDH4P	270

Air performance measured according to: ISO 5801.
Installation category A, without contact protection.
Noise: Total sound power level LwA ISO 10302 measured on a hemisphere with a radius of 2 m.
Sound pressure level LpA measured at 1 m distance from fan axis.
The values given are applicable only under the specified measuring conditions and may differ depending on the installation conditions.
In the event of deviation from the standard configuration, the parameters must be checked after installation!
For detailed information see
http://www.ebmpapst.com/general conditions

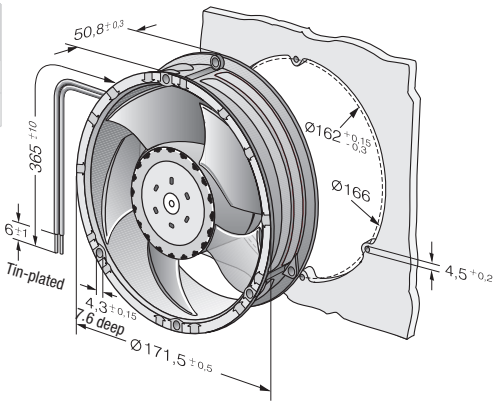

Finger guards from p. 254

ebmpapst