Series 04

22.5mm 30.5mm IP65 10A 500VAC

INDICATOR | PUSHBUTTON | E-STOP | MUSHROOM | KEYLOCK | SELECTOR | BUZZER

Choose one component from each of the coloured sections to assemble a complete switch.

Product Profile

The Series 04 is a high quality switch range that includes pushbuttons, indicators, selectors, mushroom headed switches, key switches, and Emergency-stops.

Options include self cleaning, slow-make and snap-action switching elements.

Technical data see pages 40-42
Technical drawings see pages 43-47

- IP65 Protection
- Switch Rating:
  Maximum Voltage, 500VAC
  Maximum Thermal Current, I_{th} = 10A
  230VAC/6A, 24VDC/10A
- Raised Mounting into 22.5mm cut out
- Flush Mounting into 30.5mm cut out
- Illumination using Ba9s Lamps or LED's
- All standard lenses are transparent with translucent diffuser
- Screw terminal or plug-in connections

Indicator



Indicator, round, full face, 22.5mm mounting

Colour	Part No.
Red	704.000.2
Yellow	704.000.4
Green	704.000.5
Blue	704.000.6
Clear	704.000.7

For complete switch also order



Indicator, flush mount, aluminium bezel, 30.5mm mounting

Colour	Part No.
Red	704.006.218*
Yellow	704.006.418*
Green	704.006.518*
Blue	704.006.618*
Clear	704.006.718*

*Add suffix 'B' for non captive screw with flat washer and spring washer option

For complete switch also order

Indicator



Indicator, flush mount, silver bezel, 30 x 30mm mounting

Colour	Part No.
Red	704.202.208
Yellow	704.202.408
Green	704.202.508
Blue	704.202.608
Clear	704.202.708

For complete switch also order

Non Illuminated pushbutton



Non illuminated raised pushbutton, grey plastic bezel, 22.5mm mounting

Colour	Part No., Momentary	Part No., Maintained
Red	704.010.2	704.040.2
Yellow	704.010.4	704.040.4
Green	704.010.5	704.040.5
Blue	704.010.6	704.040.6
Clear	704.010.7	704.040.7
Black	704.010.0	704.040.0

For complete switch also order A



Non illuminated raised pushbutton, aluminium bezel, 22.5mm mounting

Colour	Part No., Momentary	Part No., Maintained
Red	704.012.2	704.042.2
Yellow	704.012.4	704.042.4
Green	704.012.5	704.042.5
Blue	704.012.6	704.042.6
Clear	704.012.7	704.042.7
Black	704.012.0	704.042.0

For complete switch also order A

Choose one component from each of the coloured sections to assemble a complete switch.
For other options or further information please contact your local sales office.

BLOCK | LED | A ACCESSORIES

Non Illuminated pushbutton



Non illuminated flush mount pushbutton, aluminium bezel, 30.5mm mounting

Colour	Part No., Momentary	Part No., Maintained
Red	704.012.218	704.042.218
Yellow	704.012.418	704.042.418
Green	704.012.518	704.042.518
Blue	704.012.618	704.042.618
Clear	704.012.718	704.042.718
Black	704.012.018	704.042.018

For complete switch also order A



Non illuminated flush mount pushbutton, silver bezel, 30 x 30mm mounting

Colour	Part No., Momentary	Part No., Maintained
Red	704.210.008	704.240.008
Yellow	704.210.208	704.240.208
Green	704.210.408	704.240.408
Blue	704.210.508	704.240.508
Clear	704.210.608	704.240.608
Black	704.210.708	704.240.708

For complete switch also order A

Illuminated pushbutton



Illuminated raised pushbutton, grey plastic bezel, 22.5mm mounting

Colour	Part No., Momentary	Part No., Maintained
Red	704.030.2	704.060.2
Yellow	704.030.4	704.060.4
Green	704.030.5	704.060.5
Blue	704.030.6	704.060.6
Clear	704.030.7	704.060.7

For complete switch also order A

Illuminated pushbutton



Illuminated raised pushbutton, aluminium bezel, 22.5mm mounting

Colour	Part No., Momentary	Part No., Maintained
Red	704.032.2	704.062.2
Yellow	704.032.4	704.062.4
Green	704.032.5	704.062.5
Blue	704.032.6	704.062.6
Clear	704.032.7	704.062.7

For complete switch also order A



Illuminated flush mount pushbutton, aluminium bezel, 30.5mm mounting

Colour	Part No., Momentary	Part No., Maintained
Red	704.032.218*	704.062.218*
Yellow	704.032.418*	704.062.418*
Green	704.032.518*	704.062.518*
Blue	704.032.618*	704.062.618*
Clear	704.032.718*	704.062.718*

*Add suffix 'B' for non captive screw with flat washer and spring washer option

For complete switch also order A



Illuminated flush mount pushbutton, silver bezel, 30 x 30mm mounting

Colour	Part No., Momentary	Part No., Maintained
Red	704.230.208*	704.260.208*
Yellow	704.230.408*	704.260.408*
Green	704.230.508*	704.260.508*
Blue	704.230.608*	704.260.608*
Clear	704.230.708*	704.260.708*

*Add suffix 'B' for improved shock and vibration performance option

For complete switch also order A

Series 04

22.5mm 30.5mm IP65 10A 500VAC

INDICATOR | PUSHBUTTON | E-STOP | MUSHROOM | KEYLOCK | SELECTOR | BUZZER

Choose one component from each of the coloured sections to assemble a complete switch.

Emergency-stop switch



Emergency-stop, twist release, 37mm diameter, foolproof to EN 60947-5-1 and EN 418, use slow-make switching elements

	Part No.
	704.064.2

For complete switch also order A



Emergency-stop, key release, 37mm diameter, foolproof to EN 60947-5-1 and EN 418, use slow-make switching elements

	Part No.
	704.066.2

For complete switch also order A

Mushroom headed pushbutton



Mushroom headed pushbutton, plastic bezel and aluminium bezel, 22.5mm mounting, function momentary

Colour	Part No., Plastic	Part No., Aluminium
Red	704.070.2	704.071.2
Yellow	704.070.4	704.071.4
Green	704.070.5	704.071.5
Black	704.070.0	704.071.0

For complete switch also order A

Complete switch



Features

- IP65 protection
- Renowned in the transportation sector for guaranteed reliability
- Modular switching system
- Intensive LED illumination
- Good snap action tactile feel
- Self cleaning contacts
- Stackable contact blocks
- Flush mount aluminium protective cover (to prevent accidental operation, damage)
- Spring return to close
- Worldwide approvals

Choose one component from each of the coloured sections to assemble a complete switch.
For other options or further information please contact your local sales office.

BLOCK | LED | A ACCESSORIES

Key insert switch



Crew insert switch, stainless steel front ring, flush mount, 30.5mm mounting

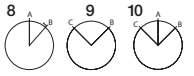

Drawing	Part No.	Momentary/Maintained
8	704.103.0.*28	Momentary
9	704.101.0.*28	Maintained
10	704.093.0.*18	Maintained/Maintained
10	704.095.0.*18	Momentary/Momentary
10	704.097.0.*18	Maintained/Momentary

*Customised key shape will be given a specified letter by EAO. When ordering please include dimensional drawing and sample key

For complete switch also order A

Keylock switch



Keylock switch 2 position, raised, 22.5mm mounting

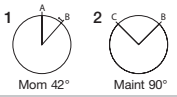

Drawing	Part No.	Momentary/Maintained	Key rem.
1	704.123.0	Momentary	A
2	704.121.0	Maintained	C
2	704.122.0	Maintained	C + B

For complete switch also order A



Keylock switch 2 position, raised, 22.5mm mounting

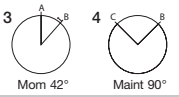

Drawing	Part No.	Momentary/Maintained	Key rem.
3	704.123.018	Momentary	A
4	704.121.018	Maintained	C
4	704.122.018	Maintained	C + B

For complete switch also order A

Keylock switch



Keylock switch 2 position, flush mount, 30 x 30mm mounting

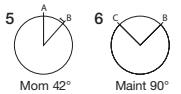

Drawing	Part No.	Momentary/Maintained	Key rem.
5	704.343.008	Momentary	A
6	704.341.008	Maintained	C
6	704.342.008	Maintained	C + B

For complete switch also order A



Keylock switch 3 position, raised, 22.5mm mounting

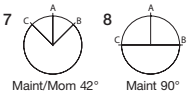

Drawing	Part No.	Momentary/Maintained	Key rem.
7	704.115.0	Momentary	A
7	704.114.0	Maintained	A
7	704.116.0	Maintained	C + B
8	704.113.0	Maintained	C + A + B

For complete switch also order A



Keylock switch 3 position, flush mount, 30.5mm mounting

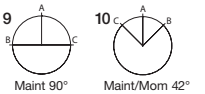

Drawing	Part No.	Momentary/Maintained	Key rem.
9	704.113.018	Maintained	C + A + B
10	704.115.018	Momentary	A
10	704.114.018	Maintained	A
10	704.116.018	Maintained	C + B

For complete switch also order A

INDICATOR | PUSHBUTTON | E-STOP | MUSHROOM | KEYLOCK | SELECTOR | BUZZER

Choose one component from each of the coloured sections to assemble a complete switch.

Keylock switch



Keylock switch
3 position, flush mount,
30 x 30mm mounting

11 Maint/Mom 42°

Drawing	Part No.	Momentary/Maintained	Key rem.
11	704.335.008	Momentary	A
11	704.334.008	Maintained	A
11	704.336.008	Maintained	C + B
11	704.333.008	Maintained	C + A + B

For complete switch also order A

Selector switch



Selector switch short
lever 2 position, raised,
22.5mm mounting

12 Mom 42° 13 Maint 90°

Drawing	Part No.	Momentary/Maintained	Bezel
12	704.412.0	Momentary	Grey plastic
12	704.413.0	Momentary	Aluminium
13	704.410.0	Maintained	Grey plastic
13	704.411.0	Maintained	Aluminium

For complete switch also order A



Selector switch short lever
2 position, flush mount,
30.5mm mounting

14 Mom 42° 15 Maint 90°

Drawing	Part No.	Momentary/Maintained	Bezel
14	704.413.018	Momentary	Aluminium
15	704.411.018	Maintained	Aluminium

For complete switch also order A

Selector switch



Selector switch short lever
2 position, flush mount,
30 x 30mm mounting

16 Mom 42° 17 Maint 90°

Drawing	Part No.	Momentary/Maintained	Bezel
16	704.512.008	Momentary	Black plastic
17	704.510.008	Maintained	Black plastic

For complete switch also order A



Selector switch short lever
3 position, raised,
22.5mm mounting

18 Maint/Mom 42°

Drawing	Part No.	Momentary/Maintained	Bezel
18	704.404.0	Momentary	Grey plastic
18	704.405.0	Momentary	Aluminium
18	704.402.0	Maintained	Grey plastic
18	704.403.0	Maintained	Aluminium

For complete switch also order A



Selector switch short lever
3 position, flush mount,
30.5mm mounting

19 Maint/Mom 42°

Drawing	Part No.	Momentary/Maintained	Bezel
19	704.405.018	Momentary	Aluminium
19	704.403.018	Maintained	Aluminium

For complete switch also order A

Choose one component from each of the coloured sections to assemble a complete switch.
For other options or further information please contact your local sales office.

BLOCK | LED | A ACCESSORIES

Selector switch



Selector switch short lever
3 position, flush mount,
30 x 30mm mounting

19 Maint/Mom 42°

Drawing	Part No.	Momentary/Maintained	Bezel
19	704.504.008	Momentary	Black plastic
19	704.502.008	Maintained	Black plastic

For complete switch also order A



Selector switch long
lever 2 position, raised,
22.5mm mounting

20 Mom 42° 21 Maint 90°

Drawing	Part No.	Momentary/Maintained	Bezel
20	704.102.0	Momentary	Grey plastic
20	704.103.0	Momentary	Aluminium
21	704.100.0	Maintained	Grey plastic
21	704.101.0	Maintained	Aluminium

For complete switch also order A



Selector switch long lever
2 position, flush mount,
30.5mm mounting

22 Mom 42° 23 Maint 90°

Drawing	Part No.	Momentary/Maintained	Bezel
22	704.103.018	Momentary	Aluminium
23	704.101.018	Maintained	Aluminium

For complete switch also order A

Selector switch



Selector switch long lever
2 position, flush mount,
30 x 30mm mounting

24 Mom 42° 25 Maint 90°

Drawing	Part No.	Momentary/Maintained	Bezel
24	704.302.008	Momentary	Black plastic
25	704.300.008	Maintained	Black plastic

For complete switch also order A



Selector switch long
lever 3 position, raised,
22.5mm mounting

26 Maint/Mom 42°

Drawing	Part No.	Momentary/Maintained	Bezel
26	704.094.0	Momentary	Grey plastic
26	704.095.0	Momentary	Aluminium
26	704.092.0	Maintained	Grey plastic
26	704.093.0	Maintained	Aluminium

For complete switch also order A

Selector switch



Selector switch long
lever 3 position, flush mount,
30.5mm mounting

27 Maint/Mom 42°

Drawing	Part No.	Momentary/Maintained	Bezel
27	704.095.018	Momentary	Aluminium
27	704.093.018	Maintained	Aluminium

For complete switch also order A

INDICATOR | PUSHBUTTON | E-STOP | MUSHROOM | KEYLOCK | SELECTOR | BUZZER

Choose one component from each of the coloured sections to assemble a complete switch.

Selector switch



Selector switch long lever 3 position, flush mount, 30 x 30mm mounting

Drawing	Part No.	Momentary/Maintained	Bezel
28	704.294.008	Momentary	Black plastic
28	704.292.008	Maintained	Black plastic

For complete switch also order A



Selector switch, short lever multi position, flush mount, 30.5mm mounting

Part No.	Bezel
704.411.118KN	Aluminium
For complete selector switch order	
Kraus & Naimer contact block	

For complete switch also order A



Selector switch, long lever multi position, flush mount, 30.5mm mounting

Part No.	Bezel
704.101.118KN	Aluminium
For complete selector switch order	
Kraus & Naimer contact block	

For complete switch also order A

Selector switch



Selector switch, short lever multi position, flush mount, 30 x 30mm mounting

Part No.	Bezel
704.510.108KN	Black plastic
For complete selector switch order	
Kraus & Naimer contact block	

For complete switch also order A



Selector switch, long lever multi position, flush mount, 30 x 30mm mounting

Part No.	Bezel
704.300.108KN	Black plastic
For complete selector switch order	
Kraus & Naimer contact block	

For complete switch also order A

For other options or further information please contact your local sales office.

Product Profile

A range of lever switches to compliment the EAO Series 04 and are available with a choice of lever styles and switching action.

Options include momentary and maintained positions with 4 connection method types.

- IP54 Protection
- Switch Rating, 10A, 250VAC
- Flush Mounting into 33.5mm dia. cut out
- Up to 5 switching Positions
- Different handle shapes available
- LED Illumination Option
- Mechanical Life of minimum 5 Million Operations
- Connection types: Screw Terminal, Plug-in, JST Connector, Fast-on 6.3mm, cage clamp®

Lever switch



Lever switch, 2-5 positions, cage clamp®, aluminium bezel, silver contacts, 33.5mm mounting

Colour	Range	Momentary/ Maintained	Contact type	Voltage
● Black	S 41*	Momentary/ Maintained	max. 5 contacts (NC/NO)	max.250VAC/DC, 1.5A

*Part number will be supplied by EAO once schematic diagram has been defined including specification of lever style and switching action. For further information please contact your local sales office.



Lever switch, 2-5 positions, JST pin header, aluminium bezel, silver contacts, 33.5mm mounting

Colour	Range	Momentary/ Maintained	Contact type	Voltage
● Black	S 42*	Momentary/ Maintained	max. 5 contacts (NC/NO)	max.250VAC/DC, 1.5A

*Part number will be supplied by EAO once schematic diagram has been defined including specification of lever style and switching action. For further information please contact your local sales office.

Lever switch



Lever switch, 2-5 positions, plug-in terminal, aluminium bezel, silver contacts, 33.5mm mounting

Colour	Range	Momentary/ Maintained	Contact type	Voltage
● Black	S 43*	Momentary/ Maintained	max. 5 contacts (NC/NO)	max.250VAC/DC, 1.5A

*Part number will be supplied by EAO once schematic diagram has been defined including specification of lever style and switching action. For further information please contact your local sales office.



Lever switch, 2-5 positions, cage clamp®, aluminium bezel, silver contacts with positive opening, 33.5mm mounting

Colour	Range	Momentary/ Maintained	Contact type	Voltage
● Black	S 44*	Momentary/ Maintained	max. 4 contacts (NC/NO)	max.250VAC/DC, 10A

*Part number will be supplied by EAO once schematic diagram has been defined including specification of lever style and switching action. For further information please contact your local sales office.



Lever switch, 2-5 positions, plug-in or screw terminals, aluminium bezel, silver contacts with positive opening, 33.5mm mounting

Colour	Range	Momentary/ Maintained	Contact type	Voltage
● Black	S 45*	Momentary/ Maintained	max. 4 contacts (NC/NO)	max.250VAC/DC, 10A

*Part number will be supplied by EAO once schematic diagram has been defined including specification of lever style and switching action. For further information please contact your local sales office.

INDICATOR | PUSHBUTTON | E-STOP | MUSHROOM | KEYLOCK | SELECTOR | BUZZER

Choose one component from each of the coloured sections to assemble a complete switch.

Buzzer



Buzzer, plastic bezel, raised, 22.5mm mounting, 24VDC, 95dB ± 8 at a distance of 0.1m

Part No.	Front finish
14-810.002	Black plastic
14-810.902	Chromium-plated



Buzzer, plastic bezel, flush mount, 30.5mm mounting, 24VDC, IP40, 95dB ± 8 at a distance of 0.1m

Part No.	Front finish
14-810.910	Black plastic
14-810.918	Chromium-plated

Contact block

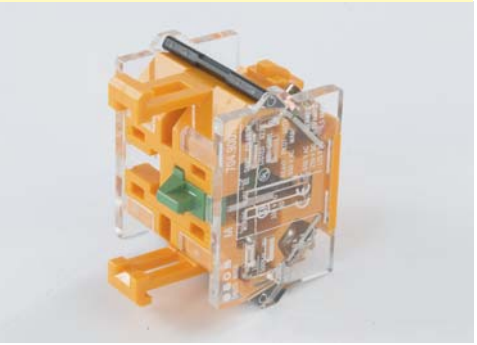

Contact block, screw terminal, snap-action with self-cleaning silver contacts

Part No.	Contact type
704.900.1*	1NO
704.900.2*	1NC
704.900.3*	2NO
704.900.4*	2NC
704.900.5*	1NO/1NC

Other contact materials available.
Please contact us.
*Add suffix 'B' for non captive screw with flat washer and spring washer option

For complete switch also order

Contact block

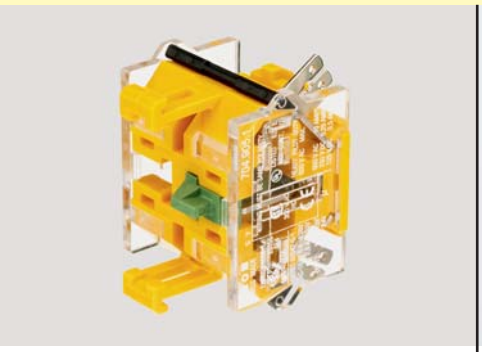

Contact block, plug-in terminal, 6.3mm, snap-action with self-cleaning silver contacts

Part No.	Contact type
704.905.1*	1NO
704.905.2*	1NC
704.905.3*	2NO
704.905.4*	2NC
704.905.5*	1NO/1NC

Other contact materials available.
Please contact us.
*Add suffix '/D' for double plug-in terminal

For complete switch also order

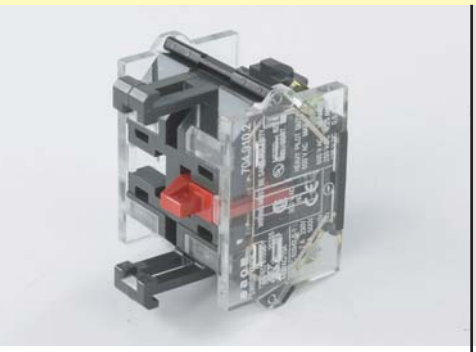

Contact block, screw terminal, slow-make with forced opening silver contacts

Part No.	Contact type
704.910.2*	1NC
704.910.4*	2NC
704.910.5*	1NO/1NC

Other contact materials available.
Please contact us.
*Add suffix '/B' for non captive screw with flat washer and spring washer option

For complete switch also order

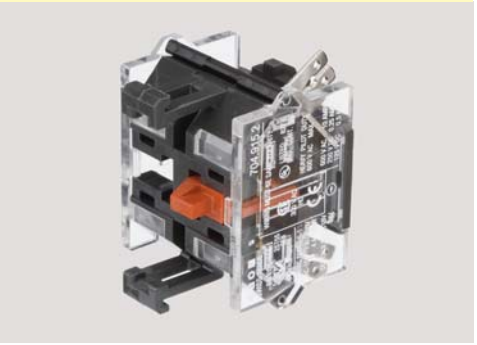

Contact block, plug-in terminal, 6.3mm, slow-make with forced opening silver contacts

Part No.	Contact type
704.915.2*	1NC
704.915.4*	2NC
704.915.5*	1NO/1NC

Other contact materials available.
Please contact us.
*Add suffix '/D' for double plug-in terminal

For complete switch also order

Choose one component from each of the coloured sections to assemble a complete switch.
For other options or further information please contact your local sales office.

BLOCK | LED | A ACCESSORIES

Contact block



Kraus & Naimer contact block, multi position, screw terminal from 2 - 12 positions

LED



LED, Ba9s, single chip, 6 Volt and 12 Volt

Colour	Part No.	Voltage
Red	10-2506.1082	6VDC, 17mA
Yellow	10-2506.1084	6VDC, 17mA
Green	10-2506.1085	6VDC, 17mA
Blue	10-2506.1086	6VDC, 7mA
White	10-2506.1089	6VDC, 17mA
Red	10-2509.1142	12VAC/DC, 16mA
Yellow	10-2509.1144	12VAC/DC, 16mA
Green	10-2509.1145	12VAC/DC, 7mA
Blue	10-2509.1146	12VAC/DC, 16mA
White	10-2509.1149	12VAC/DC, 16mA



LED, Ba9s, single chip, 24 Volt and 28 Volt

Colour	Part No.	Voltage
Red	10-2512.1142	24VAC/DC, 15mA
Yellow	10-2512.1144	24VAC/DC, 15mA
Green	10-2512.1145	24VAC/DC, 7mA
Blue	10-2512.1146	24VAC/DC, 15mA
White	10-2512.1149	24VAC/DC, 15mA
Red	10-2513.1142	28VAC/DC, 13mA
Yellow	10-2513.1144	28VAC/DC, 13mA
Green	10-2513.1145	28VAC/DC, 7mA
Blue	10-2513.1146	28VAC/DC, 13mA
White	10-2513.1149	28VAC/DC, 13mA

Customised switching element part number to be supplied by EAO, once schematic diagram has been defined. For further information please contact your local sales office.

For complete switch also order

LED



LED, Ba9s, single chip, 48 Volt

Colour	Part No.	Voltage
Red	10-2519.1052	48VAC/DC, 8mA
Yellow	10-2519.1054	48VAC/DC, 8mA
Green	10-2519.1055	48VAC/DC, 4mA
Blue	10-2519.1056	48VAC/DC, 8mA
White	10-2519.1059	48VAC/DC, 8mA



LED, Ba9s, single chip, 110 Volt with surge and transient protection

Colour	Part No.	Voltage
Red	10-2422.3052	110VDC, 5.5mA
Yellow	10-2422.3054	110VDC, 5.5mA
Green	10-2422.3055	110VDC, 5.5mA
Blue	10-2422.3056	110VDC, 5.5mA
White	10-2422.3059	110VDC, 5.5mA



LED, Ba9s, single chip, 130 Volt and 230 Volt

Colour	Part No.	Voltage
Red	10-2H24.2052	130VAC / 5mA
Yellow	10-2H24.2054	130VAC / 5mA
Green	10-2H24.2055	130VAC / 3mA
Blue	10-2H24.2056	130VAC / 5mA
White	10-2H24.2059	130VAC / 5mA
Red	10-2H25.2042	230VAC / 3mA
Yellow	10-2H25.2044	230VAC / 3mA
Green	10-2H25.2045	230VAC / 2mA
Blue	10-2H25.2046	230VAC / 3mA
White	10-2H25.2049	230VAC / 3mA

INDICATOR | PUSHBUTTON | E-STOP | MUSHROOM | KEYLOCK | SELECTOR | BUZZER

Choose one component from each of the coloured sections to assemble a complete switch.

A Accessories



Lamp / LED block, screw terminal

Part No.
704.950.0*
*Add suffix 'B' for non captive screw with
flat washer and spring washer option



Lamp / LED block, plug-in terminal, 6.3mm

Part No.
704.950.1*
*Add suffix '/D' for double plug-in terminal



Lens cap, round, transparent, plastic for raised and flush indicators with bezel and pushbutton actuators

Colour	Part No.
Red	704.602.2
Yellow	704.602.4
Green	704.602.5
Blue	704.602.6
Clear	704.602.7
For complete lens also order diffuser	
704.609.9 (see page 38)	

A Accessories



Lens cap raised, round, transparent, plastic for raised and flush mount pushbutton actuators

	Part No.
Red	704.611.2
Yellow	704.611.4
Green	704.611.5
Blue	704.611.6
Clear	704.611.7
For complete lens also order diffuser	
704.610.9 (see page 38)	



Lens cap, round, aluminium anodised for raised and flush mount pushbutton actuators

	Part No.	Comment
Red	704.601.2	
Yellow	704.601.4	
Blue	704.601.6	
Silver	704.601.8	
Silver	704.601.81	Window for illumination
Black	704.601.0	
Black	704.601.01	Window for illumination



Protective cover, raised pushbutton

Part No.
704.925.0

Choose one component from each of the coloured sections to assemble a complete switch.
For other options or further information please contact your local sales office.

BLOCK | LED | A ACCESSORIES

A Accessories



Aluminium protective cover for flush mount pushbutton with fitted spring, closed

Colour	Part No.
Red	704.928.12
Yellow	704.928.14
Blue	704.928.16
Natural	704.928.18



Aluminium protective cover for flush mount selector switch short lever with fitted spring, closed

Colour	Part No.
Natural	704.928.28



Aluminium protective cover for flush mount selector switch, lockable

	Part No.
Natural	704.928.38

A Accessories



Protective front ring with silicon membrane for raised or flush mount pushbutton

Part No.	Size
704.600.3	29mm Ø for raised pushbutton
704.955.3	35mm Ø for flush mount pushbutton



Emergency-stop protective shroud, yellow painted aluminium with 22.5mm mounting hole

Part No.
704.927.4



Emergency-stop switch label, 60mm diameter, English, German, French and Dutch

Part No.	Markings
704.963.6	Emergency stop
704.963.5	Not Aus
704.963.7	Arret D'urgence
007.963.6	Noodstop

INDICATOR | PUSHBUTTON | E-STOP | MUSHROOM | KEYLOCK | SELECTOR | BUZZER

Choose one component from each of the coloured sections to assemble a complete switch.

A Accessories



Emergency-stop switch enclosure with 22.5mm mounting hole, 83mm (w) x 83mm (h) x 59mm (d)

	Part No.
1	704.945.0
2	704.945.6



Blanking plate

Part No.	Mounting hole
704.960.7	22.5mm Ø
704.964.8	30.5mm Ø
704.964.9	30 x 30mm



Lens remover for round pushbuttons and indicators. LED and lamp remover for round and square pushbuttons and indicators

Part No.
700.006.0

A Accessories



Lens remover for square pushbuttons and indicators

98-968

04

Choose one component from each of the coloured sections to assemble a complete switch.
For other options or further information please contact your local sales office.

BUZZER | BLOCK | LED | A ACCESSORIES

A Accessories



Mounting flange

	Part No.	Material
	704.960.5	Metal
	704.950.5	Plastic

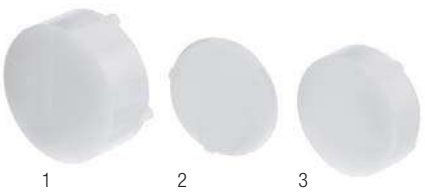

Diffuser for raised indicator, diffuser for flat lens indicator and pushbutton, diffuser for raised pushbutton

Image	Part No.	Product description
1	704.608.9	Diffuser for raised indicator
2	704.609.9	Diffuser for flat lens
3	704.610.9	Diffuser for raised pushbutton

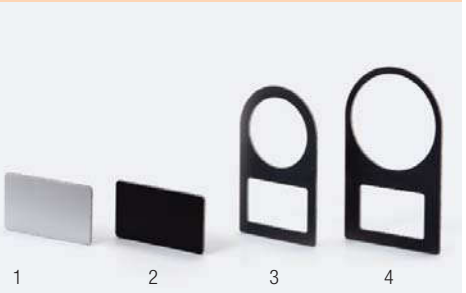

Legend plate, adhesive, natural anodised aluminium finish for raised and flush mount pushbuttons

Image	Part No.	Mounting hole	Legend plate
1	704.968.0	23.5 x 14.5mm	Aluminium
2	704.968.1	23.5 x 14.5mm	Black
3	704.968.2	22.5mm Ø	Black
4	704.968.3	30.5mm Ø	Black
	704.968.4	35 x 18mm	Aluminium
	704.968.5	35 x 18mm	Black

Snap-action switching element

Switching system

The double-break, snap-action switching element is equipped with one or two independent contact systems, acting as normally open or normally closed contact. The snap-action switching element is fitted with self-cleaning contacts. Up to 3 switching elements can be snapped to each actuator.

Material

Material of contacts
hardsilver, gold/silver, silver/palladium (for aggressive atmospheres)

Switching element
polycarbonate PC

Mechanical characteristics

Connection method
screw terminals
plug-in terminals 6.3 x 0.8 mm:
max. wire cross-section: 2 x 2.5 mm
max. wire cross-section of stranded cable: 2 x 1.5 mm
For switches with plug-in terminals it is necessary to provide insulation sockets and to maintain a spacing of 65 mm between rows (mounting dimensions).

Starting torque
screws at the mounting flange: max. 25 Ncm
screws at switching element: max. 50 Ncm

Actuating force
11-20 N ± 1 N
depending on the number of switching elements, 1 to 3 elements

Storage temperature
-40°C to + 85°C

Mechanical life

pushbuttons:	- maintained action 1.5 million cycles of operation
	- momentary action 3 million cycles of operation
selector switch:	- maintained action 1.25 million cycles of operation
	- momentary action 2.5 million cycles of operation
e-stop switch:	- >= 50´000 cycles of operation
keylock switch:	- maintained action 25´000 cycles of operation
	- momentary action 50´000 cycles of operation

Rebound time
<= 3 ms

Travel
5.8 ± 0.2 mm

Resistance to shock
(single impacts, semi-sinusoidal)
30 g for 11 ms as per EN 60 947-5-1

Resistance to vibration
(sinusoidal)
10 g at 10-2000 Hz, amplitude 0,75 mm as per EN 60 947-5-1

Ambient air temperature
min. - 25°C (- 40° with restriction)
max. without illumination: + 80°C
max. with neon lamp + 80°C
max. with LED: + 80°C
max. with incandescent lamp: + 40°C
(as per DIN IEC 68-)

Electrical characteristics

Rated insulation voltage
500 VAC/600 VDC as per VDE 0100, group C

Standards
The switches comply with the "Standards for low-voltage switching devices" EN 60 947-5-1

Contact resistance
starting value <= 50 mΩ as per IEC 512-2-4

Insulation resistance
>= 10 mΩ between open contacts at 500 VDC, as per IEC 512-2-10

Continuous thermal current I_{th_2}
10 A
The maximum current in continuous operation and at ambient temperature must not exceed the quoted maximum values.

Switch rating max.
at switch rating AC for gold-, silver- and hard silver contacts
service category AC-15 as per EN60947-5-1 (cos ϕ = 0.7)

voltage:	230 VAC	400 VAC	500 VAC
current:	6 A	4 A	2.5 A

at switch rating DC for gold-, silver- and hard silver contacts
service category DC as per EN60947-5-1
L/R=100 ms at P>=50 W and
L/R=2 x P ms<50 W
WOP stands for switch rating in watt

voltage:	24 VDC	60 VDC	110 VDC
current:	10 A	3 A	1 A

Switch rating min.
gold/silver contacts:

voltage:	5 VDC	24 VDC	110 VDC
current:	15 mA	5 mA	2 mA

hard silver contacts:

voltage:	24 VDC	110 VDC
current:	50 mA	10 mA

Electric strength
5000 VAC, 50 Hz, 1 min. between all terminals and earth.

Approvals

- SEV 500 VAC/10 A
- CSA 300 VAC
- UL 600 VAC HD
- German Navy
- German Lloyd
- CE (declaration of conformity)
- CB

Slow-make switching element

Switching system

The double-break, slow-make switching element is equipped with one or two independent contact systems, acting as normally open or normally closed contact. Slow-make contacts with forced action are ideal for high switch ratings. Up to 3 switching elements can be snapped to each actuator.

Material

Material of contacts
hardsilver, gold/silver, silver/palladium (for aggressive atmospheres)

Switching element
polycarbonate PC

Mechanical characteristics

Connection method
screw terminals
plug-in terminals 6.3 x 0.8 mm:
max. wire cross-section: 2 x 2.5 mm
max. wire cross-section of stranded cable: 2 x 1.5 mm
For switches with plug-in terminals it is necessary to provide insulation sockets and to maintain a spacing of 65 mm between rows (mounting dimensions).

Starting torque
screws at the mounting flange: max. 25 Ncm
screws at switching element: max. 50 Ncm

Actuating force
13-36 N ± 1 N
depending on the number of switching elements, 1 to 3 elements

Storage temperature
-40°C to + 85°C

Mechanical life

pushbuttons:	- maintained action 1.5 million cycles of operation
	- momentary action 3 million cycles of operation
selector switch:	- maintained action 1.25 million cycles of operation
	- momentary action 2.5 million cycles of operation
e-stop switch:	- >= 50´000 cycles of operation
keylock switch:	- maintained action 25´000 cycles of operation
	- momentary action 50´000 cycles of operation

Travel
5.8 ± 0.2 mm

Resistance to shock
(single impacts, semi-sinusoidal) 30 g for 11 ms as per EN 60 947-5-1

Resistance to vibration
(sinusoidal) 10 g at 10-2000 Hz, amplitude 0,75 mm as per EN 60 947-5-1

Rebound time
<= 1 ms

Ambient air temperature
min. - 25°C (- 40° with restriction)
max. without illumination: + 80°C
max. with neon lamp + 80°C
max. with LED: + 80°C
max. with incandescent lamp: + 40°C

Electrical characteristics

Rated insulation voltage
500 VAC/600 VDC as per VDE 0100, group C

Standards
The switches comply with the Rules for low-voltage switching devices EN 60 947-5-1

Contact resistance
starting value <= 50 mΩ as per IEC 512-2-4

Insulation resistance
>= 100 mΩ between open contacts at 500 VDC, as per IEC 512-2-10.

Continuous thermal current I_{th_2}
10 A
The maximum current in continuous operation and at ambient temperature must not exceed the quoted maximum values.

Switch rating max.
at switch rating AC for gold-, silver- and hard silver contacts
service category AC-15 as per EN60947-5-1 ($\cos \phi = 0.7$)

voltage:	230 VAC	400 VAC	500 VAC
current:	7 A	5 A	4 A

At switch rating DC for gold-, silver- and hard silver contacts
service category DC as per EN60947-5-1
L/R=100 ms at P>=50 W and
L/R=2 x P ms<50 W
WOP stands for switch rating in watt

voltage:	24 VDC	60 VDC	110 VDC
current:	10 A	5 A	2.5 A

Switch rating min.
gold/silver contacts:

voltage	24 VDC	110 VDC
current:	10 mA	2 mA

hard silver contacts:

voltage	24 VDC	110 VDC
current:	50 mA	10 mA

Electric strength
5000 VAC, 50 Hz, 1 min. between all terminals and earth

Approvals

- SEV 500 VAC/10 A
- CSA 300 VAC
- UL 600 VAC HD
- German Navy
- German Lloyd
- CE (declaration of conformity)
- CB

Buzzer

Buzzer system

System
Piezo disc

Material

Alarm buzzer case
polyamide

Front cap
plastic: polyamide
metal: nickel-plated brass sea-water proof

Mechanical characteristics

Connection method
plug-in terminal 2.8 x 0.5 mm

Operating temperature
-25°C to + 50°C

Storage temperature
-25°C to + 50°C

Degree of protection
IP 40 as per IEC 529 (flush mounting)
IP 65 (raised fitting) as per IEC 529

Electrical characteristics

Frequency (tone)
ca. 2.8 kHz continuous tone only

Sound pressure
95 db (A) ± 8 at a distance of 0.1 m

Operation voltage/current
operation voltage: 24 VDC ± 10%
operation current: <= 25 mA

Selector switch actuator

Material

Front ring
polyamide, aluminium or chromium-plated nickel steel

Mounting flange
polyethylene terephtalate

Actuator case
polycarbonate, polyamide

Mechanical characteristics

Actuating force
snap-action switching element: 11-20 N ± 1 N
slow-make switching element: 13-36 N ± 1 N
depending on the number of snap-action elements

Storage temperature
-30°C to + 85°C

Mechanical life
pushbutton: >= 3 million operations
selector switch: >= 2.5 million operations
emergency stop switch: >= 50´000 operations
keylock switch: >= 50´000 operations

Travel
5.8 ± 0.2 mm

Degree of protection
front as per IEC 529: IP 65

Ambient air temperature
min. -25°C
max. without illumination: + 80°C
max. with neon lamp: + 80°C
max. with LED: + 80°C
max. with incandescent lamp: + 55°C

Electrical characteristics

Standards
The switches comply with the "Rules for low-voltage switching devices" EN 60 947-5-1

Rotary selector switch element

Mechanical characteristics

Number of positions
2 to 12 positions max.

Number of contacts
1 to 16 max. normally open contacts
(contact positioning to the rotary plan)

Switching angle
Switching position a (9^{00}) is basic position
maintained action switching angle
12 x 30° max.
8 x 45° max.
6 x 60° max.
4 x 90° max.
momentary action with release 24°
(provide at the beginning or at the end)

Standard type of Kraus + Naimer
- CG 4 hardsilver contacts with 1 µ gold layer
- CG 4-1 hardsilver contacts with 35 µ gold layer

Electrical characteristics

DC 1, resistive circuits T = 1 ms

1 contact in line						
permissible voltage	24 V	48 V	60 V	110 V	220 V	440 V
rated service current	10.0 A	6.0 A	2.5 A	0.7 A	0.3 A	0.2 A
2 contacts in line						
permissible voltage	48 V	95 V	120 V	220 V	440 V	660 V
rated service current	10.0 A	6.0 A	2.5 A	0.7 A	0.3 A	0.2 A
3 contacts in line						
permissible voltage	70 V	140 V	180 V	330 V	660 V	
rated service current	10.0 A	6.0 A	2.5 A	0.7 A	0.3 A	
4 contacts in line						
permissible voltage	95 V	190 V	240 V	440 V		
rated service current	10.0 A	6.0 A	2.5 A	0.7 A		
5 contacts in line						
permissible voltage	120 V	240 V	300 V	550 V		
rated service current	10.0 A	6.0 A	2.5 A	0.7 A		
6 contacts in line						
permissible voltage	144 V	290 V	360 V	660 V		
rated service current	10.0 A	6.0 A	2.5 A	0.7 A		
8 contacts in line						
permissible voltage	190 V	350 V	450 V			
rated service current	10.0 A	6.0 A	2.5 A			

Inductive circuits T = 50 ms

1 contact in line					
permissible voltage	24 V	30 V	48 V	60 V	110 V
rated service current	6.0 A	3.0 A	1.0 A	0.7 A	0.3 A
2 contacts in line					
permissible voltage	48 V	60 V	95 V	120 V	220 V
rated service current	6.0 A	3.0 A	1.0 A	0.7 A	0.3 A
3 contacts in line					
permissible voltage	72 V	90 V	140 V	180 V	330 V
rated service current	6.0 A	3.0 A	1.0 A	0.7 A	0.3 A
4 contacts in line					
permissible voltage	96 V	120 V	190 V	240 V	440 V
rated service current	6.0 A	3.0 A	1.0 A	0.7 A	0.3 A
5 contacts in line					
permissible voltage	120 V	150 V	240 V	300 V	550 V
rated service current	6.0 A	3.0 A	1.0 A	0.7 A	0.3 A
6 contacts in line					
permissible voltage	144 V	180 V	290 V	360 V	660 V
rated service current	6.0 A	3.0 A	1.0 A	0.7 A	0.3 A
8 contacts in line					
permissible voltage	190 V	240 V	350 V	450 V	
rated service current	6.0 A	3.0 A	1.0 A	0.7 A	0.3 A

Short-circuit-proof
max. insurance (gL-characteristics) 10 A
conditional rated short-circuit current 3 kA

Rated service voltage

IEC	500 V
UL	300 V
SEV	380 V
CEE 24	380 V

Rated service current I_0
10 A
AC 21 switching of resistive load with low overload
AC 1 non or bad inductive load
AC 22 switching of mixed resistive and inductive load with low overload
AC 11 switching of magnetic drives, contactors, valves, draw-in magnet

Thermic rated current Ith_2
Ith_2 = 10 A

Resistance/motor load
CEE 24 4/2 A

04 Indicator

Raised

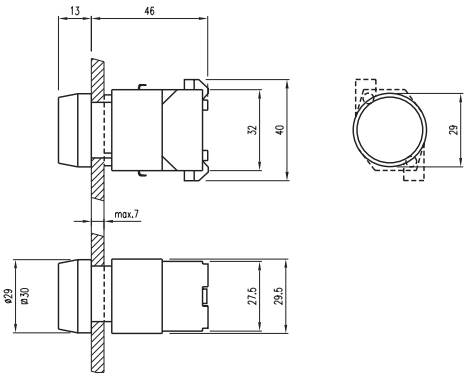

04 Indicator

Flush

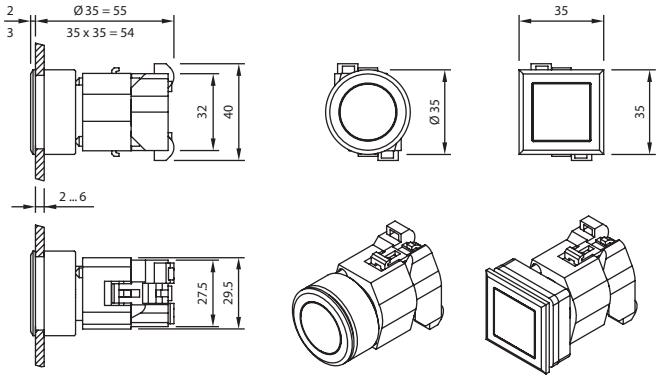

04 Pushbutton

Non-Illuminated, Raised

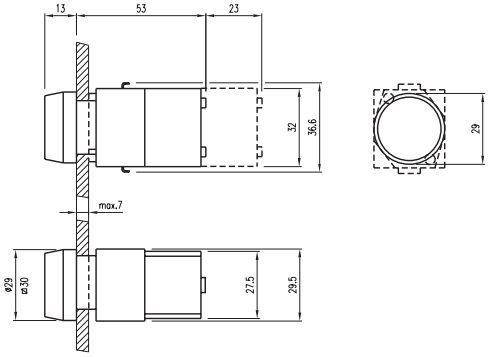

04 Pushbutton

Non-Illuminated, Flush

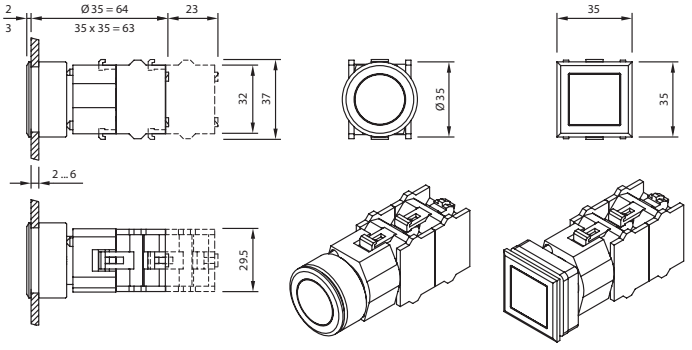

04 Pushbutton

Illuminated, Raised

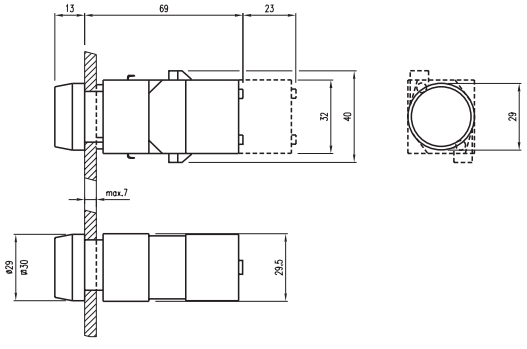

04 Pushbutton

Illuminated, Flush

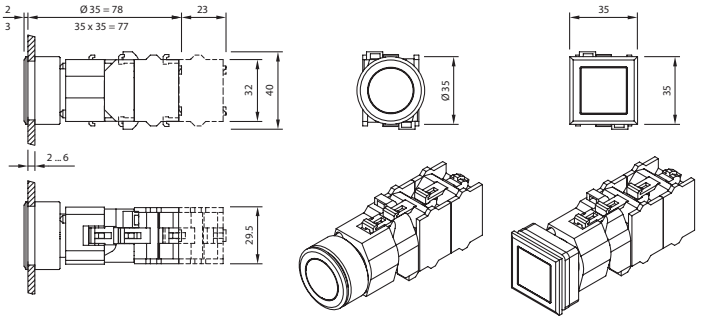

04 E-Stop

EN 418

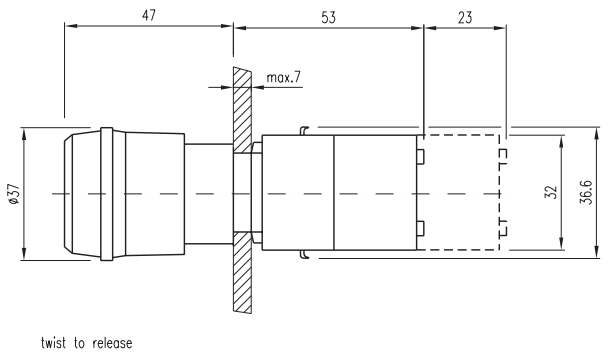

04 E-Stop

EN 418 with optional key

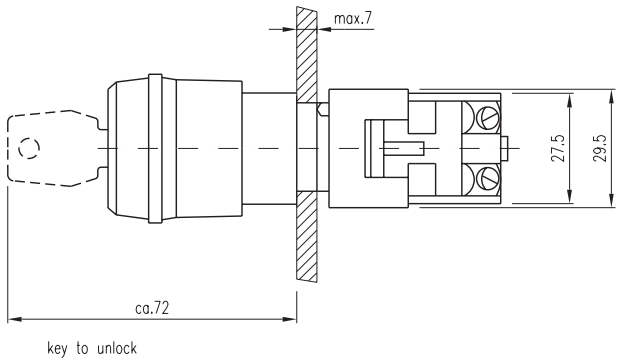

04 E-Stop Mushroom

Pushbutton Mushroom

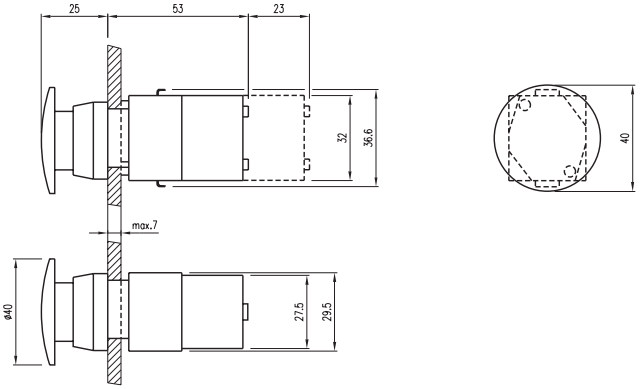

04 Keylock

2-Position, 3-Position, Raised

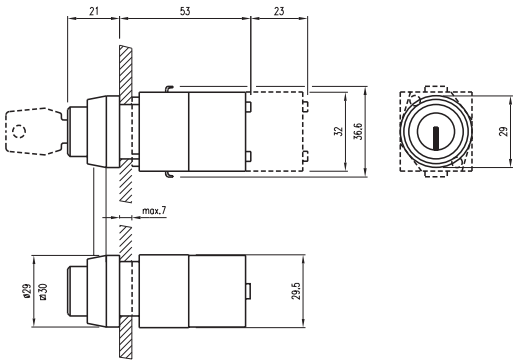

04 Keylock

2-Position, 3-Position, Flush

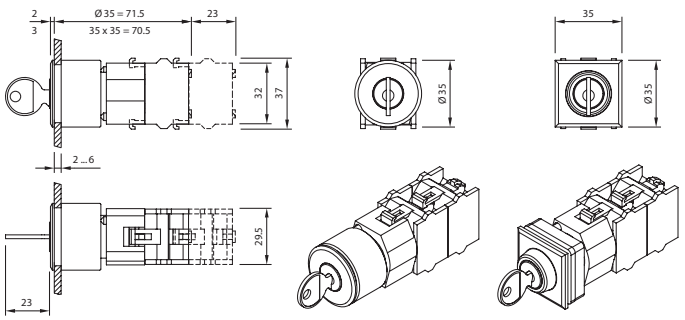

04 Selector

2-Position, 3-Position, Short, Flush

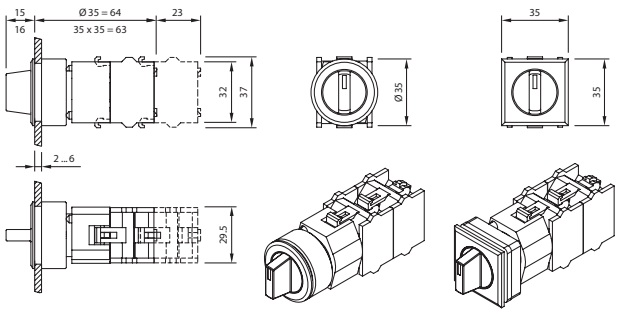

04 Selector

2-Position, 3-Position, Long, Flush

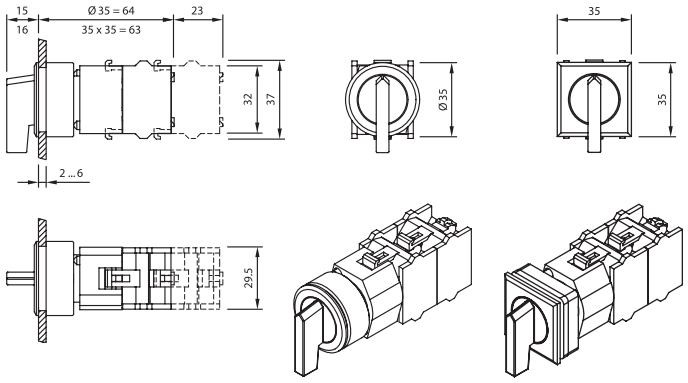

04 Selector, Short Lever

2-Position, 3-Position, Raised

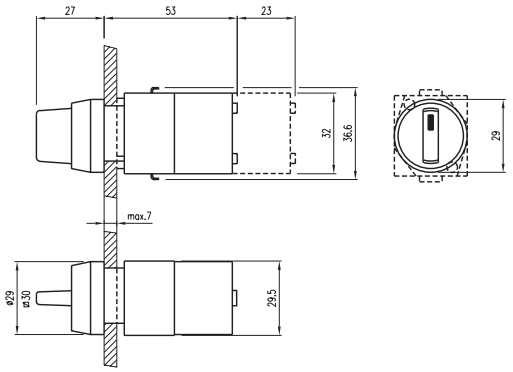

04 Selector, Long Lever

2-Position, 3-Position, Raised

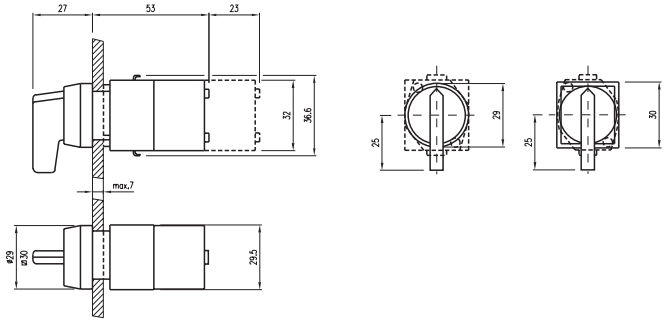

04 Lever switch

Separate technical document available.
Please contact your local sales office.

04 Buzzer

Raised

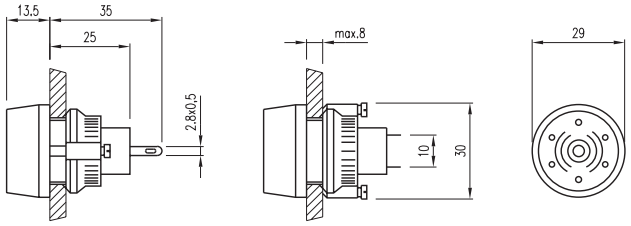

04 Buzzer

Flush

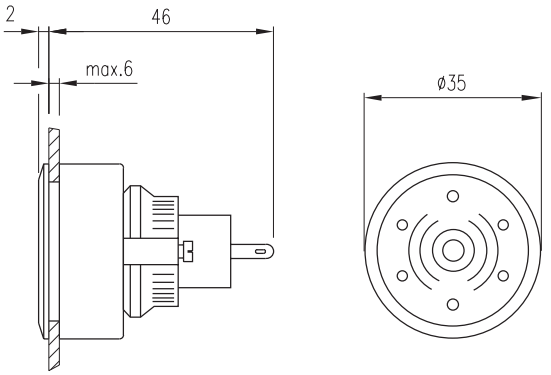

04 Key Insert Switch

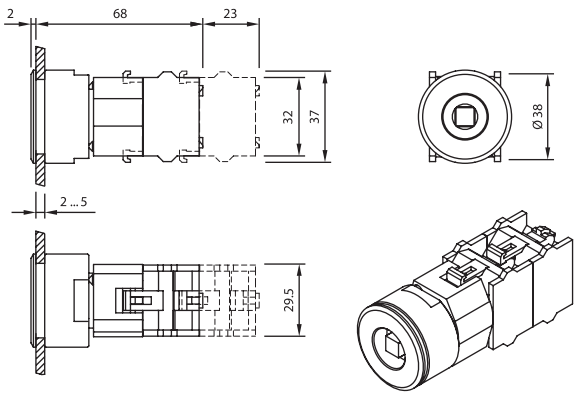

04 Cut-outs, Raised Mounting

(All but long lever)

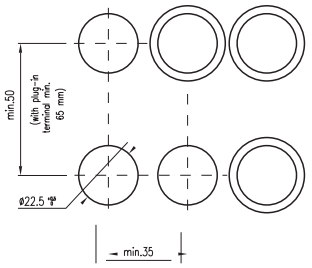

04 Cut-outs, Flush Mounting

(All but long lever)

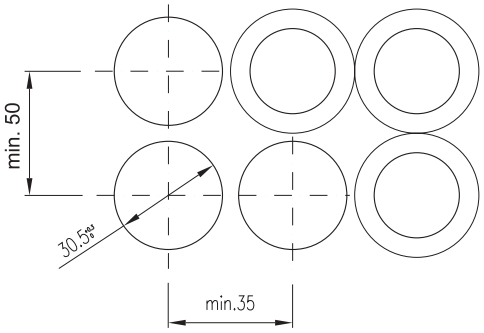

04 Long Lever Cut-outs, Raised Mounting

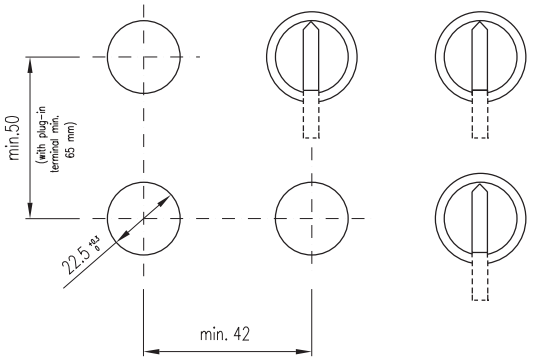

04 Long Lever Cut-outs, Flush Mounting

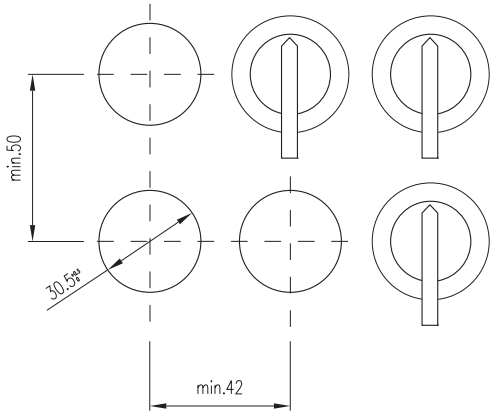

04 E-Stop EN418 Cut-outs

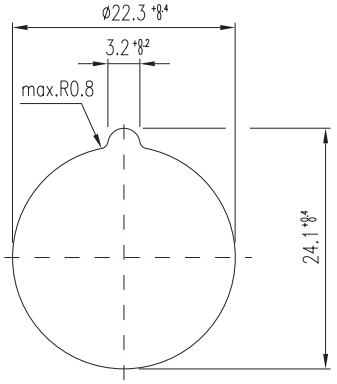

04 E-Stop Mushroom Cut-outs

Pushbutton Mushroom

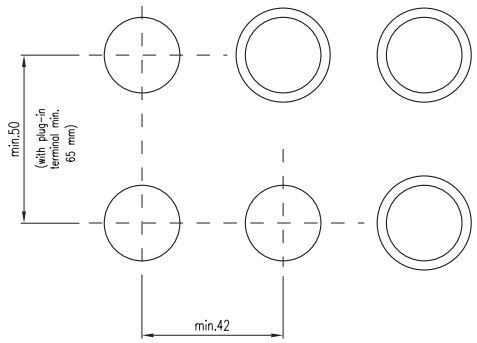

04 Key Insert Cut-outs, Flush Mounting

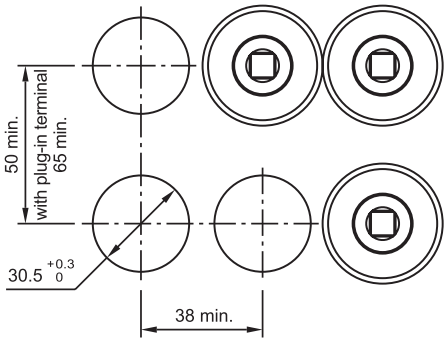

04 Cut-outs, Square, Flush Mounting

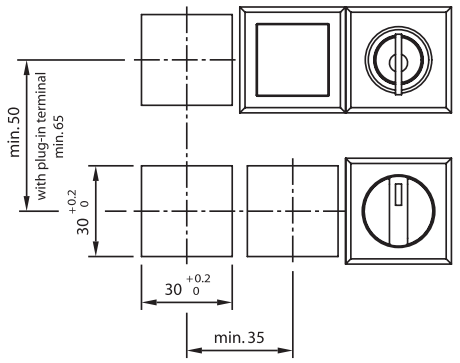

Indicator-, pushbutton-, keylock switch-, selector switch actuator short lever

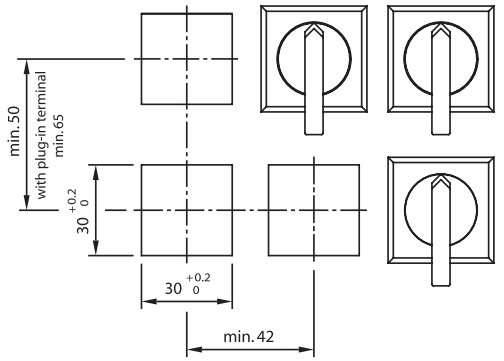

Selector switch actuator long lever

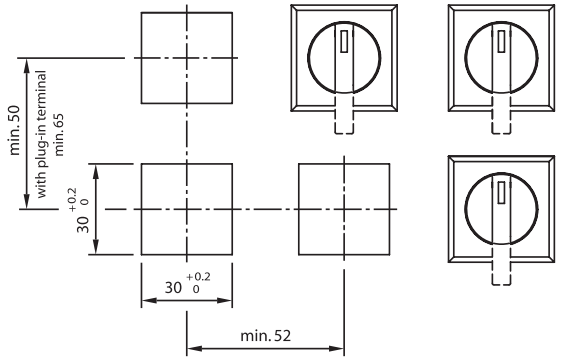

Multi position rotary selector switch actuator