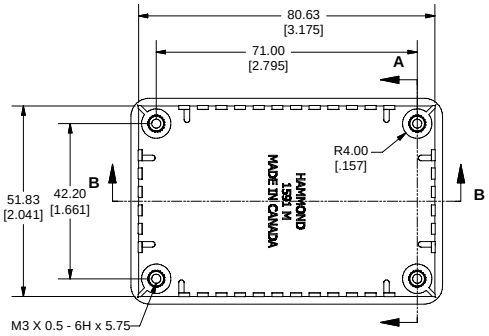


TOP VIEW OF BOX

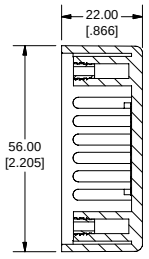


SECTION A-A

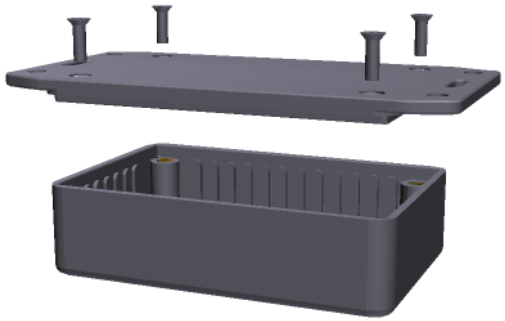

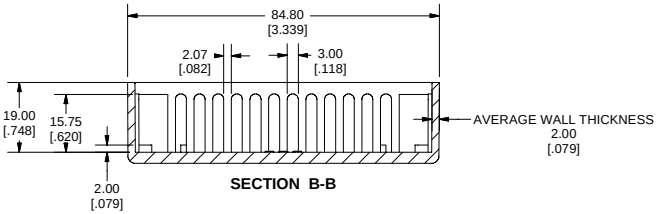


SECTION B-B

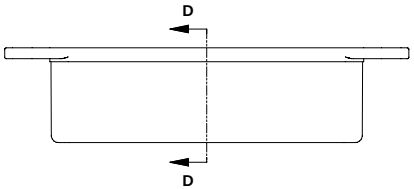


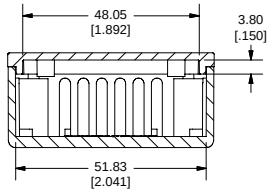


SECTION D-D

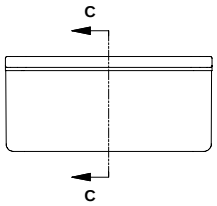


END VIEW OF ENCLOSURE

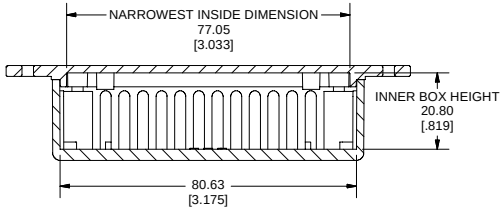


SECTION C-C

Note:
Enclosures can be Factory Modified ( Milling, Drilling, Printing etc. )
Contact Factory mjm@hammondmfg.com for quotes
Solid models of this enclosure available in STEP or IGES Format.

| PART NUMBERS | | |
|---|---|---|
| **1591MFL Flanged Lid Enclosures** | | |
| **Material** | **Colour** | **Part Number** |
| FR ABS UL94 - V0 | Black | 1591MFLBK |
| | Grey | 1591MFLGY |
| GP ABS | Black | 1591MSFLBK |
| **Accessories** | | |
| | **Description** | **Part Number** |
| Universal Use | PC Board Card Adapters | See Accessories Section |
| | Clear Lids - clear, flame retardant polycarbonate - Lid ONLY | 1591LC |
| FR ABS | Replacement Screws, Flat Head Phillips Nickel Plated Pkg of 100 | 1591MS100 1591MS100BK (Black) |
| GP ABS | Self Tapping Pkg of 100 | 1591TS100 1591TS100BK ( Black) |
| **Recomended Torque on Fasteners (no lubrication)** | | |
| | M3 - 0.5 x 10mm Screws | 30-40 cN*m |
| | #4 x 0.5 Screws | 30-40 cN*m |

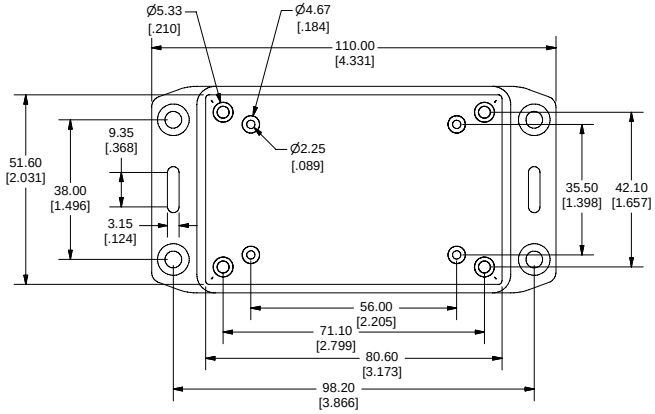


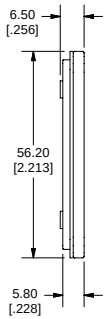


HAMMOND MANUFACTURING™

1591MFL

www.hammondmfg.com