Top View of Assembly

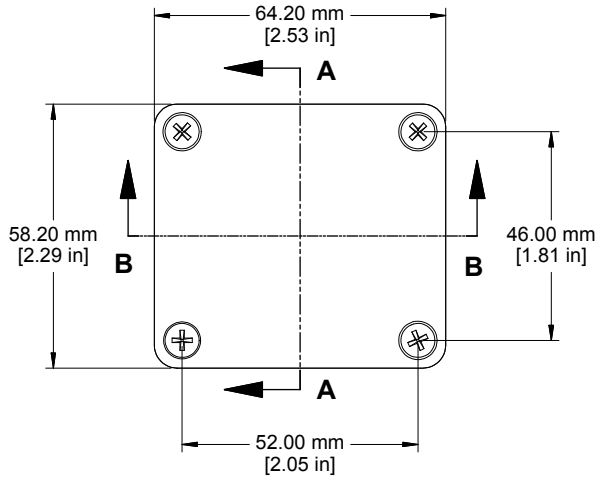

SECTION A-A
End View of Assembly

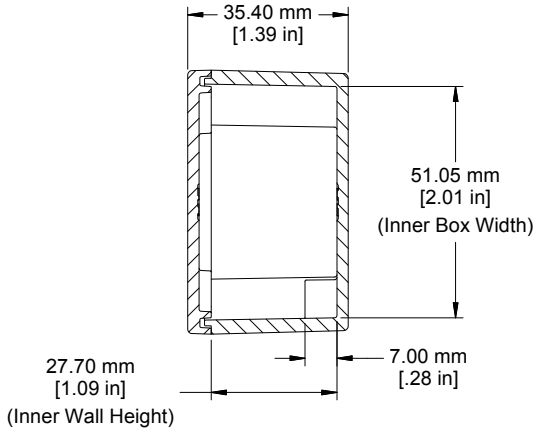

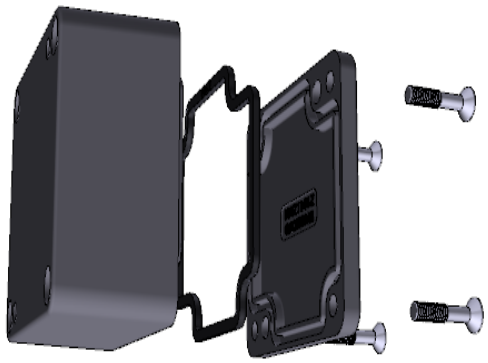

SECTION B-B
Side View of Assembly

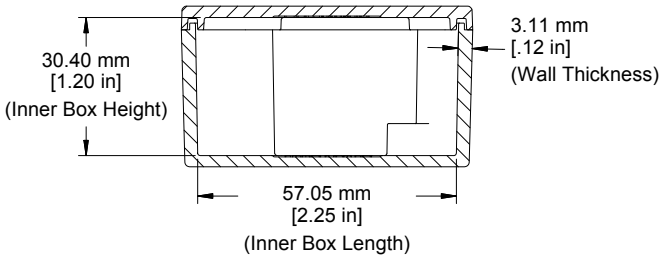

Top View Looking Inside Box

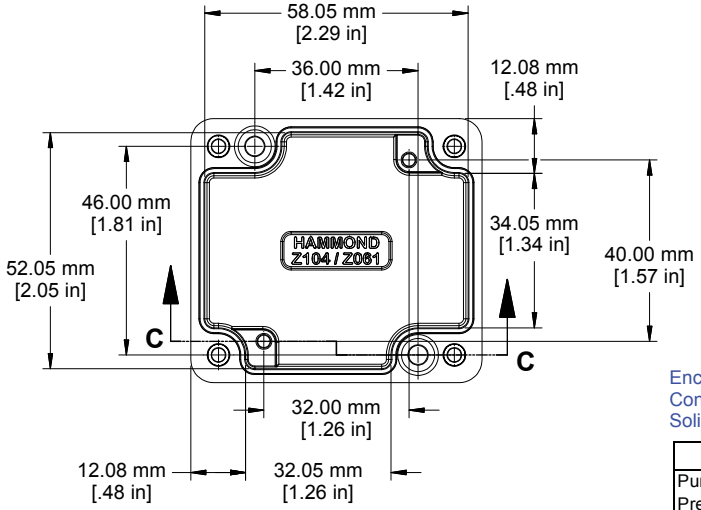

View Looking Inside Lid

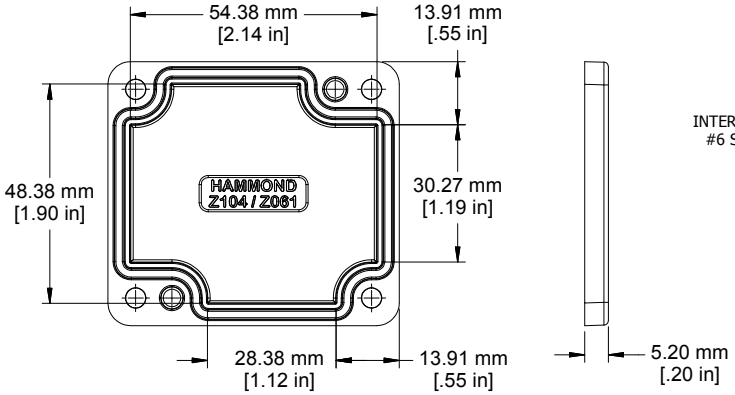

SECTION C-C
Side View of Box

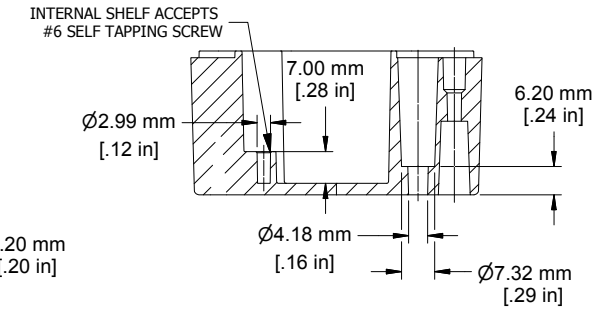

c UL US LISTED

File #E71073
NEMA 4, 4X

Enclosures can be Factory Modified (Milling, Drilling, Printing etc.)
Contact Factory mjm@hammondmfg.com for quotes
Solid models of this enclosure available in STEP or IGES.

NOTES
Purchased assembly includes enclosure, M4x20 lid screws and Pre-formed Silicone Gasket
Cover screws should be torqued to 5-7.5 lbf.in (50-75 cN.m)

1550Z104	
PART NUMBERS	
Natural Finish Enclosure	1550Z104
Black Textured Enclosure	1550Z104BK

HAMMOND MANUFACTURING™

1550Z104

www.hammondmfg.com