O5P51A

Retro-reflective sensor

O5P-FPKG/US100/3D

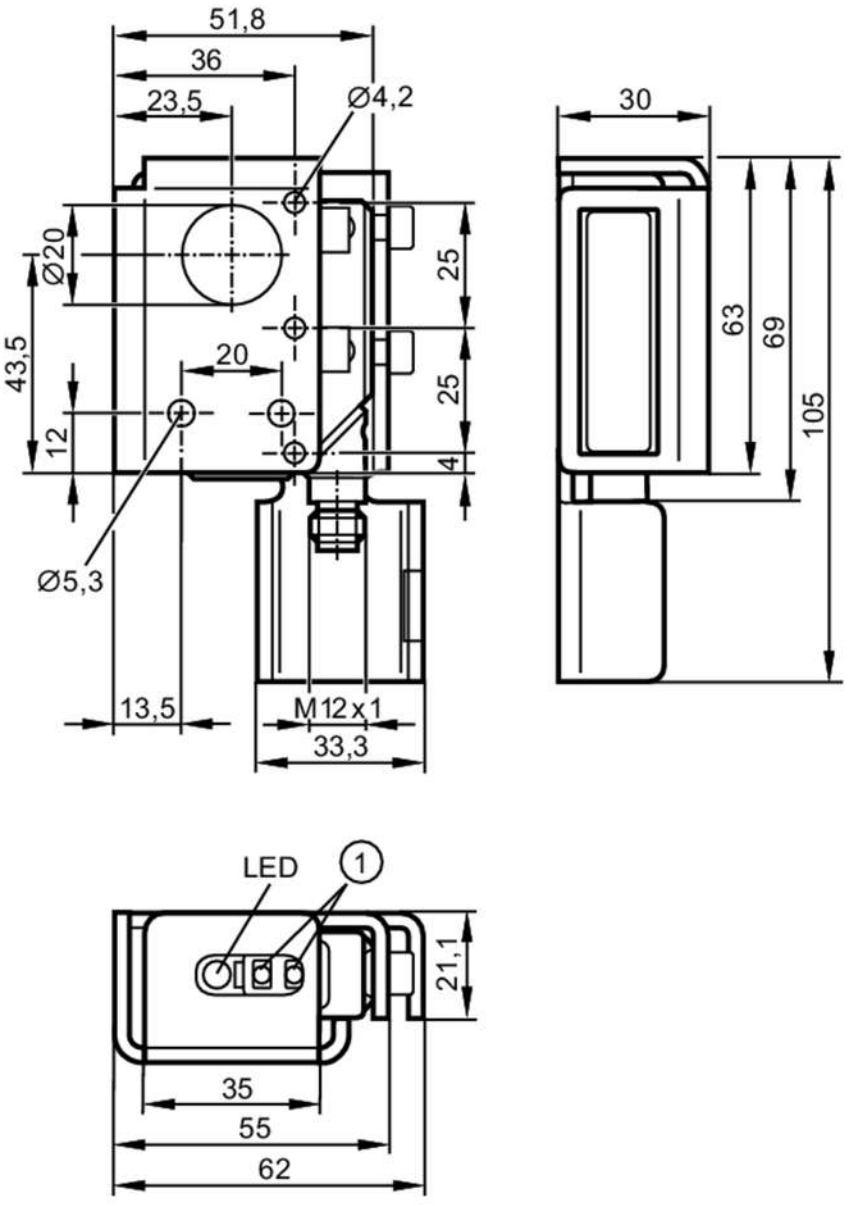

1 programming buttons
receiver in upper lens
transmitter in lower lens

Product characteristics		
Type of light		red light
Housing		rectangular
Application		
Special feature		polarisation filter
Function principle		Retro-reflective sensor
Electrical data		
Operating voltage	[V]	10...30 DC; (when used outside the hazardous area: 10...36)

O5P51A

Retro-reflective sensor

O5P-FPKG/US100/3D

Current consumption	[mA]	20	
Protection class		III	
Reverse polarity protection		yes	
Type of light		red light	
Outputs			
Electrical design		PNP	
Output function		light-on/dark-on mode; (programmable)	
Max. voltage drop switching output DC	[V]	2.5	
Permanent current rating of switching output DC	[mA]	100; (when used outside the hazardous area: 200)	
Switching frequency DC	[Hz]	2000	
Short-circuit protection		yes	
Type of short-circuit protection		pulsed	
Overload protection		yes	
Detection zone			
Range referred to prismatic reflector	[m]	0.075...10; (Prismatic reflector Ø 80 E20005)	
Range adjustable		yes	
Max. light spot diameter	[mm]	250	
Polarisation filter available		yes	
Operating conditions			
Ambient temperature	[°C]	-10...50	
Note on ambient temperature		when used outside the hazardous area: -25...60 °C	
Protection		IP 65	
Tests / approvals			
ATEX marking		II 3D Ex tc IIIC T105°C Dc X	
EMC		EN 60947-5-2	
MTTF	[years]	435	
Mechanical data			
Weight	[g]	336.5	
Housing		rectangular	
Dimensions	[mm]	105 x 30 x 62	
Materials		housing: PA; bezel: stainless steel; operator interface: TPU; Protective bracket: stainless steel	
Lens material		PMMA	
Lens alignment		side lens	
Displays / operating elements			
Display		switching status	1 x LED, yellow
Teach function		yes	
Electronic lock		yes	
Remarks			
Pack quantity		1 pcs.	

O5P51A

Retro-reflective sensor

O5P-FPKG/US100/3D

Electrical connection

Connector: 1 x M12; coding: A

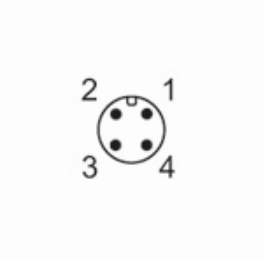

Connection

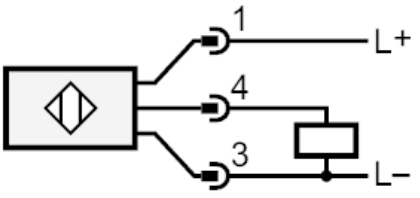

O5P51A

Retro-reflective sensor

O5P-FPKG/US100/3D

Diagrams and graphs

excess gain graph

