Compact fans for AC and DC

version 2011



The engineer's choice

ebmpapst

Trendsetter in fan technology

Uncompromising quality made by ebm-papst

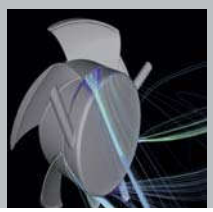







Among the best.

Trendsetting with innovative technologies. Listening to customers' needs. Developing new ideas to meet requirements and realising them with pioneering spirit. This philosophy has made ebm-papst the technological leader in the world of fans.

A brand which has very little real competition because every fan is a product of decades of application expertise gained from large-volume production and because we are in a position to produce highly efficient quality products. Our intelligent solutions for electronics cooling ensure that you are one step ahead of competitors thanks to innovative, reliable top-quality technology which is cost-favourable and in line with market requirements. And if required, tailor-made right down to the last detail. In other words, if you need fans which do not yet actually exist, contact us.

Insist on ebm-papst.

Table of contents



Information
– The company 4
– GreenTech: The Green Company 6
– Expertise and technology 8
– Tailor-made 10
– Types of fans 12
– Selecting the correct fan 13
– Fan installation 14
– Service life 15
– Definitions 16

DC axial fans
– Axial fans 17

DC centrifugal fans
– Centrifugal fans 75
– Tangential blowers 105

DC fans - specials
– Speed signal 110
– Alarm signal 114
– Vario-Pro® 119
– Speed setting 120
– Protected fans 123

ACmaxx / GreenTech EC-Compact fans
– Axial fans 125

AC axial fans
– Axial fans 141

AC centrifugal fans
– Centrifugal fans 163

Accessories
– Guard grilles 174
– Filter guard grilles 180
– Inlet nozzles 182
– Connection cables 183
– Accessories 184

ebm-papst representatives & subsidiaries 186

Company profile: ebm-papst

The entire scope of ventilation and drive technology: this is the world of ebm-papst. More than 10,000 people – in Germany and throughout the world – develop, produce and sell our motors and fans. Our global presence and our unique range of products based on a quality standard that surpasses every other have made us what we are: world market leader in motors and fans. Expertly knowing what our customers need and incessantly striving to arrive at the perfect application solution for a wide variety of different industries is what determines our daily work. Those who know us know the high standards we apply to our work and know our creed: to be as close to our customers as possible and to simply be the best in terms of innovation and reliability.



Our location in St. Georgen





Left:
Our headquarters in Mulfingen
Right:
Our location in Landshut

Our history – Our drive

Rooted in ebm, PAPST and mvl, the three leading innovators in the development and production of motors and fans, ebm-papst has established itself as the world market leader. Now as ever, our legendary inventive spirit shines through in products that set standards in many segments of industry worldwide. We are proud to say that despite difficult competition, our performance has always been exemplary and outstanding – in business, in our personal relationship with our customers, and of course with respect to technology and engineering. For decades, we have contributed to the world of air technology and drive engineering with small revolutions and large milestones.
To maintain this advantage in skills and knowledge to get maximum quality and thus the highest degree of customer satisfaction, our employees around the world put their passion and dedication to work for you.

Passionately involved in R&D

Our catalogues just list the results of our incessant efforts in R&D: products of highest quality and reliability. After all, it is our passion to constantly try something new and improve what we have. In doing so, we take advantage of the latest development methods and state-of-the-art technology and invest quite heavily in R&D facilities. Best of all, though, we rely on excellently trained and skilled engineers and technicians to be at your service in R&D and Sales & Distribution.

Producing and safeguarding high-quality products and services

This is our promise without any compromise. Whether produced in one of our six factories in Germany or one of our eleven international production sites, our products always have the same high level of quality. This quality control is something you can definitely rely on! And this across all levels of production and throughout all processes: consulting customers, development, material selection through to picking certified, choice suppliers and on to the production of parts and final delivery. On top of this, our products have to pass the most rigorous tests under all realistic operating conditions: continuous stress test, salt spray test, vibration test, or precision noise measuring, just to mention a few. And the product gets clearance for serial production only after all the desired characteristics have been determined to be just right.
Environmental care is another priority with ebm-papst. This is why we have developed our product line in EC technology, which makes for very low power consumption. Due to our manufacturing philosophy, there is absolute focus on environmental care in production, recycling, waste and wastewater disposal.

Global Domestic

In order to be specialist for customised solutions throughout the world, you need strong partners. Global Domestic – i.e. being present all over the world and being a national company in each individual country – is how we have established ourselves in all important markets on this globe with our successful subsidiaries. And so you will always find ebm-papst close to home, speaking your language, and knowing the demands of your markets. Besides, our worldwide production alliance serves as a basis for competitive pricing. Our global services and logistic outlets, i.e. IT networking, safeguard short reaction times and just-in-time delivery.

All our efforts are documented in a comprehensive quality management system, both for products and services. Being certified as complying with the tough requirements of the international standards DIN EN ISO 9001, ISO/TS 16949-2 and of standard DIN EN ISO 14001 is just one seal of approval we have received for our unceasing efforts to provide only the best quality products and services.

Sustainability is at the centre of our thoughts and actions. Out of conviction!

Eco-friendliness and sustainability have always been at the core of our thoughts and actions. For decades, we have worked according to the simple but strict creed of our co-founder Gerhard Sturm: "Each new product we develop has to be better than the last one in terms of economy and ecology." GreenTech is the ultimate expression of our corporate philosophy.





GreenTech is pro-active development.
Even in the design phase, the materials and processes we use are optimised for the greatest possible eco-friendliness, energy balance and – wherever possible – recyclability. We continually improve the material and performance of our products, as well as the flow and noise characteristics. At the same time, we significantly reduce energy consumption. Close co-operation with universities and scientific institutes and the professorship we endow in the area of power engineering and regenerative energies allows us to profit from the latest research findings in these fields – and at the same time ensure highly qualified young academics.

GreenTech is eco-friendly production.
GreenTech also stands for maximum energy efficiency in our production processes. There, the intelligent use of industrial waste heat and groundwater cooling, photovoltaics and, of course, our own cooling and ventilation technology are of the utmost importance. Our most modern plant, for instance, consumes 91% less energy than currently specified and required. In this way, our products contribute to protecting the environment, from their origin to their recyclable packaging.

GreenTech is acknowledged and certified.
Every step in our chain of production meets the stringent standards of environmental specialists and the public. The 2008 Environmental Prize of Baden-Wuerttemberg, the Green Award 2009, the Energy Efficiency Award 2009 of the dena – to give just a few examples – testify to this. The environmental advantage gained in the performance of the products developed from our GreenTech philosophy can also be measured in the fulfilment of the most stringent energy and environmental standards. In many instances, our products are already well below the thresholds energy legislation will impose a few years from now – several times over.

Our customers profit from this every day.
The heart of GreenTech is future-oriented EC technology from ebmpapst. The EC technology at the core of our most efficient motors and fans allows efficiency of up to 90%, saves energy at a very high level, significantly extends service life and makes our products maintenance-free. These values pay off not only for the environment, but every cent also pays off for the user! All ebm-papst products – even those for which GreenTech EC technology does not (yet) make sense from an application viewpoint – feature the greatest possible connection of economy and ecology.

Expertise and technology

Drive expertise

For the past 60 years, all conceivable types and applications of drive engineering have played an essential role at ebm-papst. A commitment that is the foundation for the development of optimum drive solutions – regardless of the type of fan and its usage. DC fans are generally equipped with electronically commutated external rotor motors; in order to save as much space as possible, commutation electronic components are integrated in the hub of the fan. Our AC fans are mostly driven by shaded-pole or capacitor motors based on the external rotor principle. In the 3900 and 9900 range of particularly slim fans, internal rotor motors are used.

Low-noise performance

Our aerodynamically optimised design and high mechanical precision produces outstanding noise properties in series production. So-called "soft" commutation electronics of the DC fans ensure an excellent noise performance. By avoiding steep switching edges when the individual coils are switched, this reduces the structure-borne noise from the motor. Computer-aided measurements and series of analyses performed in a state-of-the-art sound measuring chamber are conducted on each fan model from the very beginning.

Long service life

The bearing system plays a vital role both in the long life time and quietness of device fans. The SINTEC compact bearing provides most of the device fans with a proven bearing system. Constant low noise during the entire operating time and considerably lower shock sensitivity are the outstanding features of this bearing technology. In addition, with regard to temperature endurance, Sintec compact bearings can be used without problems in most applications. Despite the slightly higher noise and shock sensitivity of ball bearings, this bearing technology should be given preference for fans exposed to extreme thermal and adverse application conditions (e.g. extreme environmental conditions, critical installation position, etc.). The service life data provided in this catalogue is based on extensive service life tests and mathematically / scientifically proven service life calculations. Our product descriptions are continuously updated with all relevant data obtained from long-term tests.



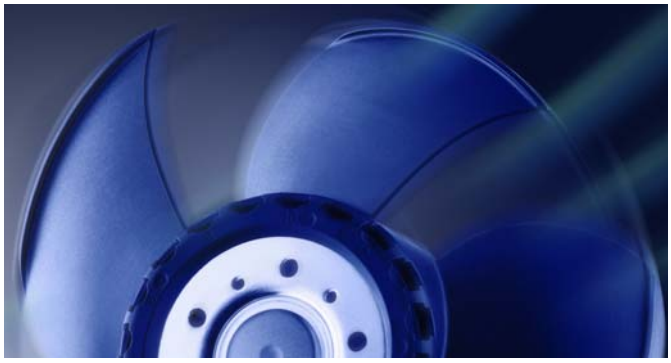

Streamline: Aerodynamics

With the aid of state-of-the-art computer programs, we are able to optimise the fan impellers and the inner shape of the housing. Air output and available motor performance are exactly matched with the size of fan. This guarantees the low noise that is typical for ebm-papst, even at high back pressure.

Sturdy construction – in metal or plastic

Fans of all-metal construction: Sturdy and indestructible. The housing is made of an aluminium alloy whereas the metal surfaces that are subject to corrosion are permanently protected by an impact- and abrasion-resistant electrophoretic baked enamel. This particular version is highly recyclable. Fans with fibreglass-reinforced plastic housing and impeller: Excellent stability and low weight distinguish this highly efficient fan concept. Combinations of metal housing and plastic impeller unite the advantages of both types of design.

Product images

The dimensioned drawings and product photos that appear in the catalogue are for orientation purposes and may differ in some details from the actual product design.

Product liability

Motors and fans from ebm-papst are components intended for proper installation. The customer bears responsibility for the overall end product.

Safety is included

It goes without saying that all ebm-papst fans conform to the approval requirements of the VDE (Association of German Electrical Engineers) and the standards and regulations of UL and CSA. All fans conform to the European Standard EN 60335 or EN 60950 plus those of the UL (Underwriters Laboratories) and CSA (Canadian Standards Association).

With few exceptions, our DC fans are designed to meet the requirements of protection class 3 / protection class voltage. ACmaxx fans are protection class 2 / AC fans are protection class 1. ebm-papst fans meet the highest requirements of electrical safety. Depending on the type, they are either impedance protected or equipped with a temperature safety switch, electronic locked-rotor protection, alarm function or have speed monitoring and speed control.

Quality in detail

It is the seemingly trivial that makes the difference when a product is labelled ‘made by ebm-papst’: consistent maintenance of development and design engineering specifications; target-oriented design; and assured quality across the entire process chain are the reasons why running times of over 150,000 hours are not unusual. The no-compromise ebm-papst quality assurance spans over all process levels – from the choice of materials and the use of carefully selected, certified suppliers, from the production of parts up to final assembly. The sum of all these apparently minor details results in fan products with superior lifetimes and reliability.

Tailor-made to meet your special requirements

Practice-oriented: Fans – customised and intelligent

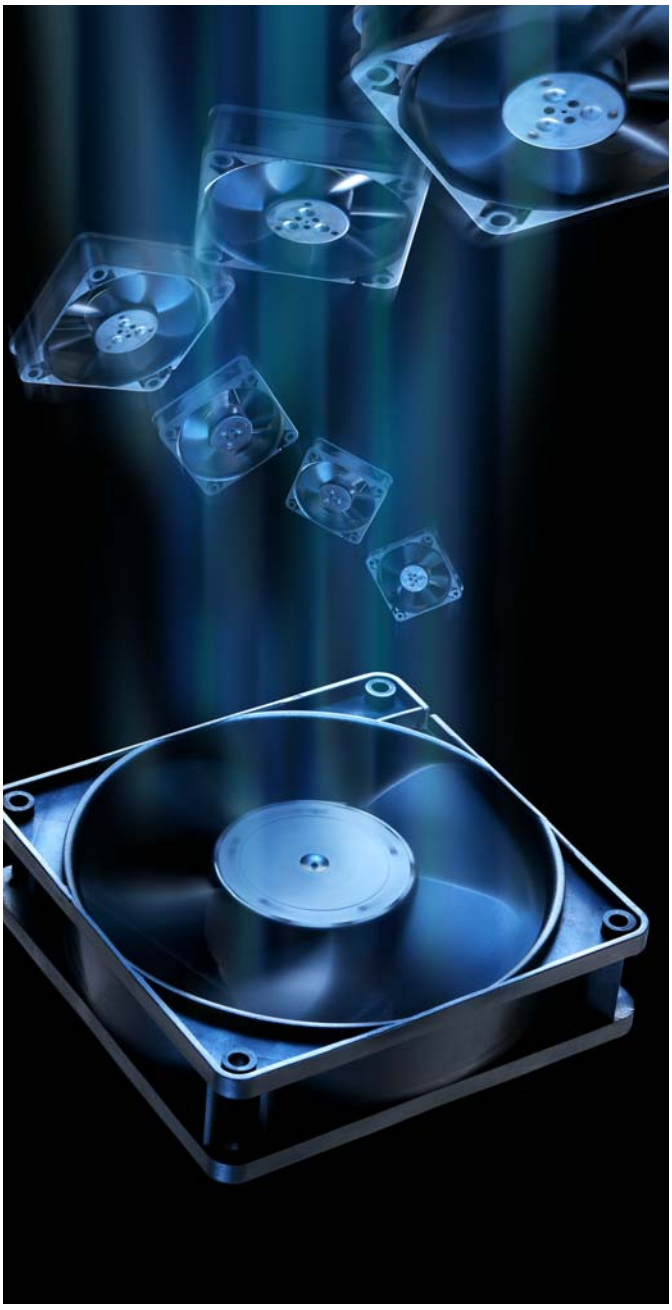

ebm-papst has always developed customer-specific intelligent fans which meet the exact requirements of the application. We provide a wide range of standard fan types, in many sizes and designs; with intelligent motor features, monitoring and control functions as well as special designs for use under extreme conditions. They are all based on the standard type fans which you will find in this catalogue. Special fan types for your application can be produced in economical batch sizes. Our expert engineers will assist you in selecting the right configuration.

Innovation at its best:
Vario-Pro® with “intelligence inside”. Its programmed intelligence thanks to customer-specifically configured software modules makes the cooling of electronics even more economical and flexible. For example, temperature-dependent speed profiles are possible with a number of freely selectable interpolation points. External speed settings and a variety of combinable alarm and tachometer functions can also be programmed. The digital motor management achieves high control accuracy.

Higher protection class for every type of application
ebm-papst provides, on request, many fan series in versions which conform to the requirements of Protection Class IP 54: Their stator and all electrical components are fully encapsulated. Stainless steel ball bearings can be used for operation in particularly aggressive media and use under extreme environmental conditions, thus providing additional reliability.

Virtually everything is possible
Regardless of your cooling and ventilation tasks, we develop the right solution and what is more, the most economical one. Based on the fans listed in this catalogue, well over 4000 different versions are available.

Temperature-controlled fans
Fans with temperature-controlled speed have particularly quiet cooling characteristics. Thanks to integrated IC technology, they adapt their speed to the current cooling requirements, which results in a drastic reduction of noise in most operating modes. A temperature sensor provides the fan with thermal information: either externally via a single lead or integrated into the hub of the fan.

Speed setting via interfaces
With a wide range of DC fans with separate control input, ebm-papst provides an alternative to the NTC-controlled types of fans. They are especially suitable for systems and units which already have standard interfaces for varying speed via internal switching and control circuits. The main applications are units which demand load-dependent individual speed profiles or systems with stand-by minimum cooling requirements and varied speed increase at varying power peaks.

“Electronic tachometer” thanks to sensor signal
Do you wish to be informed about the current fan speed at all times? ebm-papst has fans with an integrated “electronic tachometer” which registers the actual value of the fan speed. Via an integrated sensor, the fan generates speed-dependent signals which can be directly utilised. Depending on the number of poles of the motor, 2, 3 or 6 pulses per revolution are generated.

Alarm signal for more safety
If your application requires monitored fan operation, in addition to speed monitoring, ebm-papst also provides a multitude of varying alarm signals. Depending on the type of fan in question, the signal is either static, already evaluated or interface-compatible. The alarm signal output provides reliable longterm monitoring and a status signal if critical operating conditions evolve.

S-Force
The new measure of things!
When you need to provide extremely fast, powerful and efficient cooling for electronic components of all kinds, the generation of S-Force high-performance fans finishes first: in air performance, pressure build-up and technology. Extremely efficient drives and optimised aerodynamics form the core technology of the S-Force fans, which we offer in both an axial and brand-new centrifugal model.

Types of fans and their function



Axial fans:

High air flow with medium to relatively high pressure build-up

The air flow in axial fans, whose impeller is similar to that of a propeller, is conducted to a great extent parallel to the axis of rotation, in other words in the axial direction. Axial fans with free air delivery at zero static pressure have the lowest power input that rises with increasing back pressure. Axial fans for cooling of electronic equipment are mostly equipped with external housing and an electric motor integrated into the fan hub. This compact design allows space-saving accommodation of all devices; the flange is equipped with mounting holes.

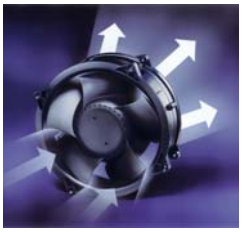

Diagonal fans:

High flow rate at relatively high pressure build-up

At first glance diagonal fans only differ slightly from axial fans. Intake is axial, whereas exhaust is diagonal. Due to the conical shape of the wheel and housing, the air is pressurised more. In direct comparison with axial fans of the same size and comparable performance, these fans are distinguished by the lower operating noise at high pressures.

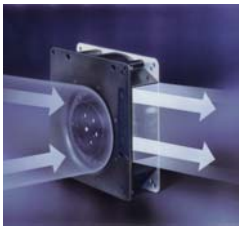

Centrifugal fans:

High pressure build-up at limited flow rate

Many of the cooling problems that occur can be optimally solved by axial and/or diagonal fans. If, for example, the required cooling air has to be conducted at an angle of 90° or if even high pressure is necessary, centrifugal fans are more effective. For your application, ebm-papst offers not only complete centrifugal fans but also motor/impeller combinations without external housing.

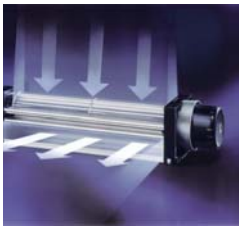

Tangential fans:

High flow rate at low pressure

Tangential fans are used above all-, for large-surface air flow in devices. The air flows through the roller-shaped impellers twice in the radial direction: in the intake area from the outside to the inside and in the outflow area from the inside to the outside. Whirls form in the roller due to the vanes which guarantee a steady flow of air through the impeller.

Selecting the correct fan

1. Dissipated energy

A large amount of the energy consumed by electrical and electronic devices is converted into heat. In selecting the correct fan, therefore, it is important to determine the dissipated energy that must be removed. The electrical power consumption of the unit to be cooled, often represents a suitable value for this purpose.

2. Permissible temperature rise

The air flow which the selected fan is required to generate, is determined by the dissipated energy and the permissible rise (ΔT) of the cooling air flow (from entry to exit of the device to be cooled). The max. allowable ΔT depends greatly on the temperature sensitivity of the individual device components. ΔT = 5K means e.g. that the average air flow leaving the device to be cooled may only be 5°C warmer than the ambient temperature (a large volume of air is required for this purpose). A lower air flow rate is sufficient if a higher temperature difference (e.g. ΔT = 20K), can be tolerated.

3. Required cooling air flow

- In the below diagram a horizontal line is drawn from the dissipated enery to intersect with the selected ΔT line.

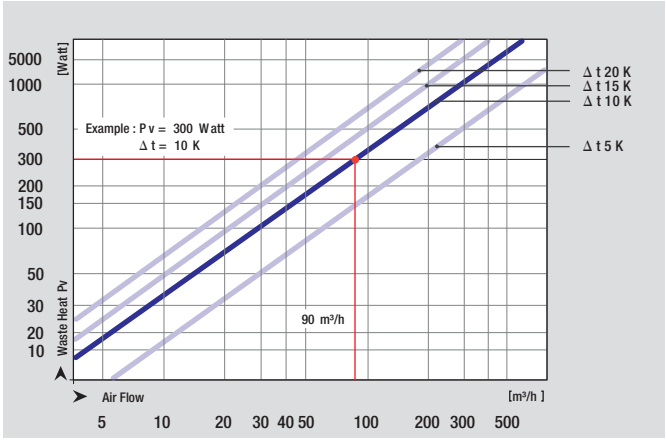

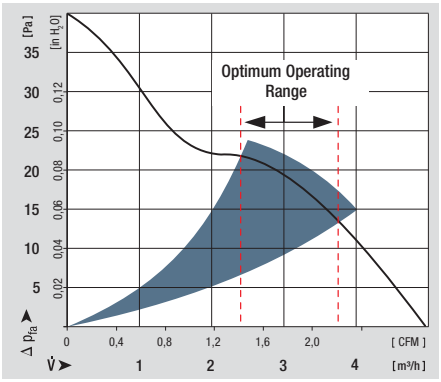

- Read down from this point to obtain the required value for the cooling air flow. The diagram is based on the following formula:

$$\dot{V}\,[m^3/h] \approx 3 \cdot \frac{Pv\ [w]}{\Delta T\ [K]}$$

4. Optimum operating range

The required fan, however, must also be able to deliver a suitable static pressure increase Δpf, in order to force the cooling air through the device. A fan must therefore be selected that provides the required air flow performance within its optimum operating range (see also the air performance curves under technical data).

5. Fan selection

If the requirements of an application are fulfilled by more than one fan, the noise level, space requirements, economy and ambient conditions will assist in making the final choice.

Fan installation

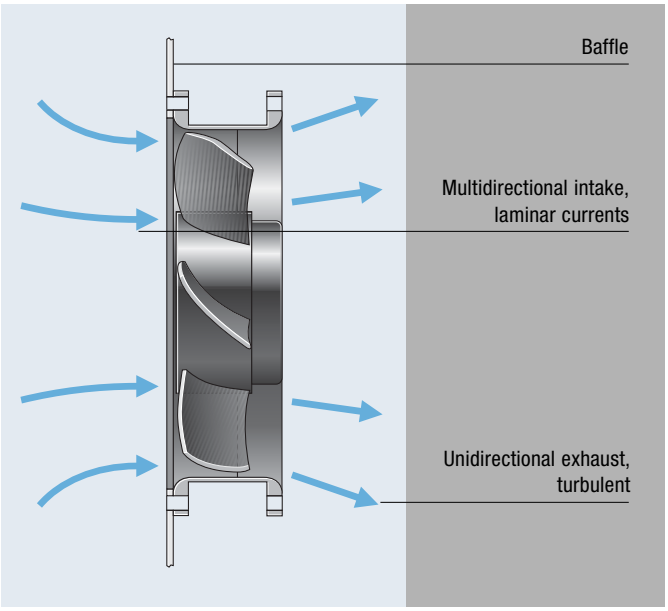

Information on installation

When a fan is operated for the first time in an application, the user may have noticed that the flow rate in the device was lower than expected. What is the reason for this?

- The values stated in this catalogue were determined under optimum, constant and comparable measurement conditions.
- Ideal mounting conditions under which free air intake and exhaust are present are seldom feasible in practice. Quite frequently the fans must be mounted in close proximity to other components or cabinet panels. As a consequence, the intake and exhaust currents may be restricted, causing the air flow to diminish and the noise level to increase. Fans are particularly sensitive to obstructions which are positioned directly in front of the output cross section as they often cause an increase in tonal noise.

Our advice: The distance between the fan and adjacent components should be at least equal to the installation depth of the fan.

Intake or exhaust side installation

Under ideal conditions, the operating point is represented as the intersection between the fan and loss curves, regardless of whether the fan is positioned at the air intake or exhaust side of the device. In addition to ensuring the required flow rate, several additional aspects must be considered for determining an appropriate fan concept.

The intake air currents of a fan are mainly laminar, comprising nearly the entire suction area. By contrast, the exhaust air of a fan is generally turbulent, while it flows on a preferred direction, e.g. axial for an axial fan. The turbulences of the exhaust intensify the heat transfer from components within the air currents, so that mounting the fan at the air intake side of the device is recommended for cooling and heating. Mounting the fan at the device intake is also advantageous because the fan will not be subjected to the dissipated heat of the device. Therefore, it operates at low ambient temperatures and has a higher life expectancy.

Accident prevention

The turning rotor and the high speeds that are sometimes involved mean that our fan products carry an inherent risk of injury. They may only be operated after correct installation and with suitable protective facilities (e.g. with a guard grille). More information can be found in the internet at: www.ebmpapst.com/safety

Service life

Service life data from ebm-papst St. Georgen

Our fans catalogue gives three different values for the service life of each product. The first column usually states the service life L_{10} at 40°C. the second column usually states the service life L_{10} at T_{max}. Exceptions are marked in the column headings. The third column states the new value , life expectancy $L_{10\Delta}$ (40°C).



Fans in an endurance test cabinet at ebm-papst St. Georgen. 1500 fans are operated in temperature cabinets until they fail.

Service life L_{10} (40°C) and L10 (T_{max})

The values given in the first two columns have been derived from intensive, in-house service life endurance tests, in which our products are operated in various positions at 40°C and 70°C until they fail. A fan is deemed to have failed when it deviates from its defined air flow and speed values, or when the operating noise becomes noticeable. Such tests can take several years before a representative number of failures have been registered, and even today, some fans are still in the process of endurance testing, even though they began tests in the 1980s. These fans are proof of the legendary reliability of fans from the Black Forest.

Test results are presented in a diagram and the service life of the product L_{10} at the temperature tested is determined on the basis of the Weibull distribution.

These tests have given us years of experience in the way various design parameters and temperatures can affect the service life of a product. Data for service life at various temperatures for new products can be stated with a very high degree of precision on the basis of tests, product specifications and of commonalities in the design of the product.

Sound power level	Sintec sleeve bearings / Ball bearings	Power input	Nominal speed	Temperature range	Service life L_{10} (40 °C) ebm-papst standard	Service life L_{10} (T_{max}) ebm-papst standard	Life expectancy $L_{10\Delta}$ (40 °C) ≥ s ≥ 15	Curve	Specials
Bel(A)	□ / ■	Watts	RPM	°C	Hours		Hours		P. 110
5,0	■	2,5	2 700	-20...+70	67 500 / 35 000		140 000	1	
5,3	■	4,2	3 300	-20...+70	65 000 / 32 500		130 000	2	

Example of the service life figures on the page of the catalogue.

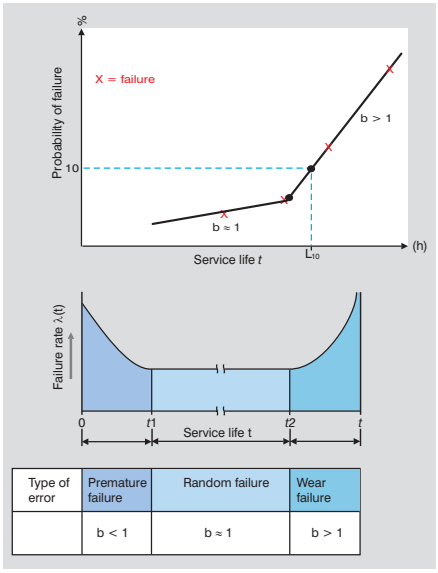

Type of error	Premature failure	Random failure	Wear failure
	b < 1	b ≈ 1	b > 1

Bathtub curve and Weibull distribution.

New: Life expectancy $L_{10\Delta}$ (40°C)

The new third service life column states the expected service life $L_{10\Delta}$. This value is based on the calculation methods conventionally applied in the compact fan market. Again here, the foundations for the service life values are our service life endurance tests at high ambient temperatures. The service life at temperatures below the test temperatures is calculated using fixed factors. This method produces much higher service life values, especially at room temperature (see diagram on right).

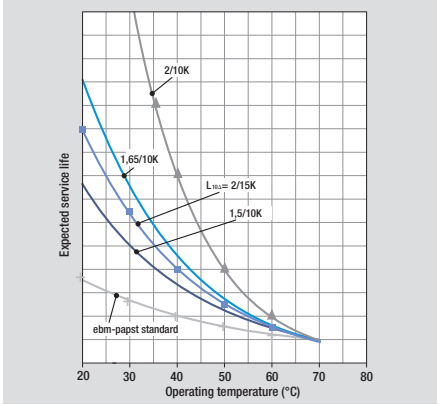

Example of the influence of factors from various manufacturers on the expected service life.

Summary:

The life span calculations have been carried out to the best of our knowledge and are based on experience gained by ebm-papst. The specified L10 (40°C), L10 (Tmax) and $L_{10\Delta}$ (40°C) values all allow statements to be made about the theoretical calculated service life under certain assumptions. The values determined here are extrapolations from our own service life tests and from statistical variables. In the respective customer applications, different influences may occur which cannot be included in the calculations due to their complexity. The service life information is explicitly not a guarantee of service life, but strictly a theoretical quality figure.

Definitions

Subject to technical alterations.
Our products are not designed for use in the aerospace industry!
German and international patents, registered designs and utility models.
ebm-papst is a registered trademark of ebm-papst Mulfingen GmbH & Co. KG.
PAPST, SINTEC, VARIOFAN and Vario-Pro are registered trademarks of ebm-papst St. Georgen GmbH & Co. KG.

Nominal voltage (Volts)
The voltage at which the nominal values (the tabular values listed in this catalogue) were determined. The fan operation for DC fans is not limited to the nominal voltage. Fan speed and fan performance can vary according to the permissible voltage range that is specified on the nameplate of each fan.

Frequency (Hz)
ebm-papst AC fans are made for operating frequencies of 50 Hz or 60 Hz. Their technical data alter accordingly.

Air flow (m^3/h)
The air performance of the fan in free air operation, i.e. the fan blows into the free space without static pressure build-up.

Fan curves
The fan curves are determined in accordance with DIN 24 163 specifications on a dual-chamber test stand with intake-side measurement. This measurement technique closely approximates the operating conditions experienced in typical applications for fans and yields realistic performance curves. The curves apply to an air density of ρ = 1.2 kg/m^3, corresponding to an air pressure of 1013 mbar at 20 °C. Variations in air density affect pressure generation but not the flow rate. The pressure generated at other air densities may be estimated with the formula $\Delta\rho 2 = \Delta\rho 1\ (\rho 2 / \rho 1)$.
The nominal speed values, air flow and power input listed in the table were measured in free air operation with horizontal shaft at an ambient temperature of 20 +5 °C, air density ρ = 1.2 kg/m^3 after a warm-up period of 5 min.

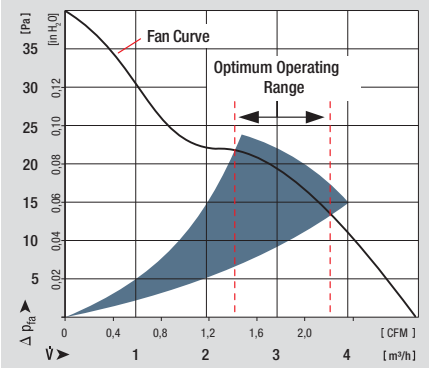

Optimum operating range
During operation, fans are required to produce an air flow with a simultaneous increase of pressure. These operating conditions are described in the section “Optimum Operating Range”. The optimum operating range is therefore always indicated in this catalogue in the shaded area. In this range the fans operate best with respect to efficiency and noise level. Within this optimum operating range the noise level only fluctuates insignificantly.

Noise [dB(A), Bel(A)]

1. Sound pressure level – dB(A)
Noise ratings of the fan in free air operation, i.e. at maximum flow rate.

2. Sound power level – Bel(A) / dB(A)
Extent of the overall sound radiation of the fan. The sound power level is determined in the optimum operating range.

PAPST Sintec® sleeve bearings
A particularly efficient bearing system with excellent qualities:
– Very precise, large sintered bearings
– Low running noise
– High service life expectancy
– Insensitive to shock and vibration

Ball bearings
Precision ball bearings for particularly high ambient temperatures and high service life expectancy.

Power input (Watts)
Input performance of the fan motor when operating at nominal voltage. Depending on the operating condition in the application, the power input may be higher.

Temperature range (°C)
The permissible ambient temperature range within which the fan can be expected to run continuously.

Service life [h]

Service life L_{10} at 40°C and T_{max}
Standard figures for service life at ebm-papst. These two temperatures are based on intensive, in-house endurance tests and on the experience more than 60 years developing fans.

Life expectancy $L_{10\Delta}$ (40°C)
Figures oriented towards the calculation methods employed by other fan manufacturers. Data based on the internal expected service life at 70°C, more optimistically extrapolated to 40°C.

We expressly state that none of the information or data in this catalogue is to be construed as a guarantee or warranty of properties.

Unit conversion

Air flow	**Pressure**
1cfm = 1,7 m^3/h	1Pa = 1x10^{-5}bar
1l/s = 3,6 m^3/h	1 inch H_2O = 249 Pa
1l/min = 0,06 m^3/h	1 mm H_2O = 9,81 Pa

DC axial fans

	DC axial fan overview	19
	DC axial fans / DC diagonal fans	23



Technical information







Range of fans
ebm-papst offers you the widest full product line of DC axial and diagonal fans: From 25 mm to 280 mm in size. Every single type of fan can be optimally integrated in the respective device concept. The highly economical brushless motor technology of these fans provides a unique variety of intelligent innovations that can be realised today at prices that would have been unthinkable just a few years ago.

Electronic protection against reverse polarity
ebm-papst DC fans have electronically commutated drives with electronic protection against reverse polarity.The electronics are conveniently located in the fan hub.

Product life expectancy
A distinctive feature of DC fan technology is the convincingly high product life expectancy. Thanks to the excellent efficiency of the brushless drives, the thermal load of the bearings is reduced, thus considerably increasing the life expectancy of the fans.

Protection class
DC fans with sleeve and ball bearings are powered by Class E insulated motors. All ebm-papst fans conform to the requirements of protection class IP 20. Fans conforming to IP 54 and special protection classes are also available.

Voltage range
Many of our DC fans can be operated on voltages that are up to 50% lower and 25% higher than their nominal voltage (see Voltage range in the technical tables). This enables the air performance to be adapted to the cooling requirements and allows the noise to be reduced, even if the fan does not have a control input.

Closed-loop speed control and monitoring
Closed-loop speed control and function monitoring are becoming increasingly important in many applications. ebm-papst offers many fans in the standard design with a control input and open collector speed signal.

S-Force
The new S-Force fans with their extremely high blower capacity of up to 950 m^3/h and pressure build-up of up to 1200 pascals are capable of dealing with the extreme heat load. If needed, these fans can produce up to 100% more output under full load and they work with a much broader delivery bandwidth than current models. This makes them ideal for equipment and systems with a high density of components. Thanks to intelligent motor features, they can be individually adapted for any application. S-Force fans are available in 5 standard dimensions.

Axial fans for DC operation

Overview of air performance

Dimensions	Series	Air flow	Page
mm		m^3/h	
□ 25 x 8	250	2,1...4,5	23
□ 40 x 10	400 F	6...9	24
□ 40 x 20	400	10...13,5	25
□ 40 x 25	400 J	19...24	26
□ 50 x 15	500 F	11...20	27
□ 60 x 15	600 F	19...33	28
□ 60 x 25	620	21...67	29
□ 60 x 25	630	40...44 NEW	30
□ 60 x 25	600 N	21...56	31
□ 60 x 25	600 N VARIOFAN	16...41	32
□ 60 x 32	600 J	70...84 NEW	33
□ 70 x 15	700 F	28...44	34
□ 80 x 25	8450	33...118 NEW	35
□ 80 x 25	8400 N	33...79	36
□ 80 x 25	8400 N VARIOFAN	20...58	37
□ 80 x 32	8300	32...80	38
□ 80 x 38	8200 J	132...222	39
□ 92 x 25	3400 N	61...102	40
□ 92 x 25	3400 N VARIOFAN	44...84	41
□ 92 x 32	3300	56...107	42
□ 92 x 38	3200 J	130...280	43
□ 119 x 25	4400 F	94...170	44
□ 119 x 25	4400 FN	200...225	45
□ 119 x 32	4300	95...204	46
□ 119 x 32	4300 VARIOFAN	61...170	47
□ 119 x 38	4400	150...285	48
□ 119 x 38	4100 N	160...237	49
□ 119 x 38	4100 NHH..NH6	260...440	50
□ 119 x 38	4100 NH7..NH8	500...570	51
□ 119 x 38	DV 4100	275	52
□ 127 x 38	5200 N	187...338	53
□ 127 x 38	DV 5200	270...324	54
□ 135 x 38	5100 N	122...250	55
□ 140 x 51	5300	338 NEW	56
□ 140 x 51	5300 TD	410...670	57
Ø 150 x 38	7100 N	360...420	58
Ø 150 x 55	7200 N	360	59
172x160x52	6100	350 NEW	60
Ø 172 x 51	6300	395...545 NEW	61
Ø 172 x 51	6300 TD	600...950 NEW	62
172x160x51	6300 TD	710...950 NEW	63
Ø 172 x 51	DV 6200	540	64
Ø 172 x 51	DV 6200 TD	100...700	65
172x150x51	6400	205...480	66
172x150x51	6400 TD	90...900	67
172x160x51	DV 6400	530	68
172x160x51	DV 6400 TD	100...680	69
220x200x51	2200 FTD	790...1220 NEW	70
□ 225 x 80	W1G 200	1090	71
□ 225 x 80	K1G 200	1020...1245 NEW	72
□ 225 x 89	K3G 200	1215...1640 NEW	73
□ 280 x 80	W1G 250	1920	74

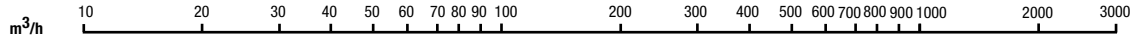

Optional special versions

Information on pictograms

On the pages of the catalogue and on the following overview pages, the pictograms illustrated below provide information about technically possible special versions in the fan line presented.
Please note that these special versions are not possible for all voltages and speeds, and not in all combinations.
The special versions are designed for specific customers and projects and are not usually available off the shelf.



Speed signal
The fan uses a separate wire to output information about its speed, and thus about the speed of the rotor. For technical details, please refer to page 110.



Go / No-go alarm
The fan uses a separate wire to output a static signal when it is stationary, thus providing information about whether or not the rotor is turning. For technical details, please refer to page 117.



Alarm with limit speed
If the speed drops below a certain level defined in the fan's electronics, the fan will emit a static signal, thus providing information about whether or not the rotor is turning. For technical details, please refer to page 114.



External temperature sensor
An NTC is connected to the fan via a separate wire and the fan changes its speed depending on the temperature at the NTC. For technical details, please refer to page 120.



Internal temperature sensor
In this case, the NTC is integrated into the fan and the fan changes its speed depending on the temperature at the NTC. For technical details, please refer to page 120.



PWM control input
The speed of the fan can be changed via a pulse-width-modulated signal. This signal is applied to a specially provided wire. For technical details, please refer to page 121.



Analogue control input
The speed of the fan can be changed via a control voltage. This control voltage is applied to a specially provided wire. For technical details, please refer to page 121.



Multi-option control input
The fan has a control input that the user can trigger either using a PWM signal, an analogue signal or a resistor. For technical details, please refer to page 122.



Protection against moisture
Protection for the fan's electronics against moisture and condensation. For technical details, please refer to page 123.



IP 54
Protection of motor and PCB board against splashed water and humidity. For technical details, please refer to page 123.



Protection against salt spray fog
Protection of fan against the damaging effects of salt spray fog. For technical details, please refer to page 123.

Axial fans for DC operation

Overview of technically feasible designs

Axial fans	Dimensions	VDE, UL, CSA	Sintec sleeve bearings/ball bearings	Sensor	Go / No-go alarm	Alarm with limit speed	External temperature sensor	Internal temperature sensor	PWM control input	Analogue control input	Multi-option control input	Humidity protection	IP >= IP54	Salt spray fog protection	Page
							OPTIONAL								
Series	mm														P.
250	25 x 25 x 8	yes	▫	•	–	–	–	–	–	–	–	•	–	–	23
400 F	40 x 40 x 10	yes	▫	•	•	–	–	–	–	–	–	•	–	–	24
400	40 x 40 x 20	yes	▫	•	•	–	–	–	•	–	–	•	–	–	25
400 J	40 x 40 x 25	yes	■	•	•	–	–	–	–	–	–	•	•	–	26
500 F	50 x 50 x 15	yes	▫	•	•	–	–	–	•	–	–	•	–	–	27
600 F	60 x 60 x 15	yes	▫	•	•	–	–	–	•	–	–	•	–	–	28
620	60 x 60 x 25	yes	■	•	•	•	•	•	•	•	–	•	•	–	29
NEW 630	60 x 60 x 25	yes	■	•	•	•	•	•	•	•	–	•	•	•	30
600 N	60 x 60 x 25	yes	▫/■	•	•	–	•	•	–	–	–	•	•	–	31
600 N VARIOFAN	60 x 60 x 25	yes	▫/■	•	•	–	•	•	–	–	–	•	–	–	32
NEW 600 J	60 x 60 x 32	yes	■	•	•	–	–	–	–	–	–	•	–	–	33
700 F	70 x 70 x 15	yes	▫	•	•	–	–	–	–	–	–	•	–	–	34
NEW 8450	80 x 80 x 25	yes	■	•	•	–	–	–	•	–	–	•	–	–	35
8400 N	80 x 80 x 25	yes	▫/■	•	•	•	•	•	•	•	–	•	•	–	36
8400 N VARIOFAN	80 x 80 x 25	yes	▫	•	•	–	•	•	–	–	–	•	–	–	37
8300	80 x 80 x 32	yes	▫/■	•	•	•	•	•	•	•	–	•	•	•	38
8200 J S-Force	80 x 80 x 38	yes	■	•	•	•	•	•	•	•	–	•	–	–	39
3400 N	92 x 92 x 25	yes	▫/■	•	•	•	•	•	•	•	–	•	•	–	40
3400 N VARIOFAN	92 x 92 x 25	yes	■	•	•	–	•	•	–	–	–	•	–	–	41
3300	92 x 92 x 32	yes	▫/■	•	•	•	•	•	•	•	–	•	•	•	42
3200 J	92 x 92 x 38	yes	■	•	•	•	•	•	•	•	–	•	•	–	43
4400 F	119 x 119 x 25	yes	▫/■	•	•	•	•	•	•	•	–	•	–	–	44
4400 FN	119 x 119 x 25	yes	■	•	•	•	•	•	•	•	–	•	–	–	45
4300	119 x 119 x 32	yes	▫/■	•	•	•	•	•	•	•	–	•	•	•	46
4300 VARIOFAN	119 x 119 x 32	yes	■	•	•	•	•	•	•	•	–	•	–	–	47
4400	119 x 119 x 38	yes	■	•	•	•	•	•	•	•	–	•	–	–	48
4100 N	119 x 119 x 38	yes	▫/■	•	•	•	•	•	•	•	–	•	•	•	49
4100 NH..NH6	119 x 119 x 38	yes	■	•	•	•	•	•	•	•	–	•	–	–	50
4100 NH7..NH8	119 x 119 x 38	yes	■	•	•	•	•	•	•	•	–	•	–	–	51
DV 4100	119 x 119 x 38	yes	■	•	•	•	•	•	•	•	–	•	•	•	52
5200 N	127 x 127 x 38	yes	■	•	•	•	•	•	•	•	–	•	•	•	53
DV 5200	127 x 127 x 38	yes	■	•	•	•	•	•	•	•	–	•	•	•	54
5100 N	135 x 135 x 38	yes	■	•	•	•	•	•	•	•	–	•	•	•	55
NEW 5300 S-Force	140 x 140 x 51	yes	■	•	•	•	•	•	•	•	–	•	•	•	56
5300 TDS-Force	140 x 140 x 51	yes	■	•	•	•	•	•	•	•	•	•	–	–	57
7100 N	150 Ø x 38	yes	■	•	•	•	•	•	•	•	–	•	•	•	58
7200 N	150 Ø x 55	yes	■	•	•	•	•	•	•	•	–	•	•	•	59
NEW 6100 N	172 x 160 x 51	yes	■	•	•	•	•	•	•	•	–	•	•	•	60
NEW 6300 S-Force	172 Ø x 51	yes	■	•	•	•	•	•	•	•	–	•	•	•	61
NEW 6300 TDS-Force	172 Ø x 51	yes	■	•	•	•	•	•	•	•	•	•	•	•	62
NEW 6300 TDS-Force	172 x 160 x 51	yes	■	•	•	•	•	•	•	•	•	•	•	•	63
DV 6200	172 Ø x 51	yes	■	•	•	•	•	•	•	•	–	•	•	•	64
DV 6200 TD	172 Ø x 51	yes	■	•	•	•	•	•	•	•	–	•	•	•	65
6400	172 x 150 x 51	yes	■	•	•	•	•	•	•	•	–	•	•	•	66
6400 TD	172 x 150 x 51	yes	■	•	•	•	•	•	•	•	–	•	•	•	67
DV 6400	172 x 160 x 51	yes	■	•	•	•	•	•	•	•	–	•	•	•	68
DV 6400 TD	172 x 160 x 51	yes	■	•	•	•	•	•	•	•	–	•	•	•	69
NEW 2200 FTD	200 Ø x 51	yes	■	•	•	•	•	•	•	•	•	•	•	•	70
W1G 200	225 x 225 x 80	UL/CSA	■	•	•	•	•	–	•	•	•	•	–	•	71
NEW K1G 200	225 x 225 x 80	yes	■	•	•	•	•	–	•	•	•	•	–	•	72

Please note that these special versions are not possible for all voltages and speeds, and not in all combinations. The special versions are designed for specific customers and projects. As a rule they are not available off the shelf and are tied to minimum volumes.
Please consult your customer support representative about the feasibility of your special variant.

* approvals applied for

– not yet available
• available

▫ Sleeve bearings
■ Ball bearings

Connection instructions for S-Force fans

Special features of S-Force fans

The S-Force series is the most powerful product series on the market. S-Force stands for the highest innovation in motor technology, fluid mechanics and electronics. The one-of-a-kind power density of the products requires special attention to the application at the customer's facility.

Service life

Due to the high currents in the fans, the load on the electrolyte capacitors is greater, which reduces the service life of the capacitor. As a larger or additional capacitor cannot be housed in the fan, the capacitor must be housed in the supply line.

If the power pack of the application has a corresponding capacitor, in some cases it may be possible to omit the external capacitor.

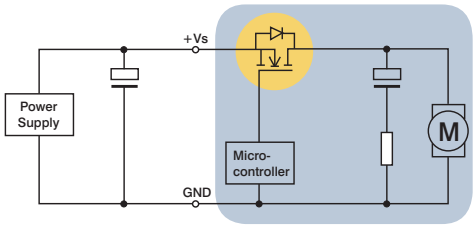

Recommended measure: Additional external capacitor (thus must be installed as close to the fan as possible < 30 cm).

Fan	Capacitor required
S-Force axial	
8200 / 3200 JH3-JH4	no
4100 NH3 / NH4 / NH5 / NH6	no
4100 NH7 / NH8	yes
5300 / 5300 TD	no
6300 / 6300 TD	no
2200 FTD	no
S-Force centrifugal	
RET 97 TD	yes
RER 120 TD	yes
RER 133 TD	no
RER 160 NTDHH	yes
REF 175 TD	no
RER 175 TD	no
RER 190 TD / RG 190 TD	no
RER 220 TD / RG 220	no
RER 225 TDM / RG 225 TDM	no
RER 225 TD / RG 225 TD	yes

Recommended capacitors

We recommend using the following capacitors from Rubycon:

24 VDC:

50 ZL 680 µF; 12,5 mm x 30 mm or

50 ZLH 680 µF 12,5 mm x 30 mm

48 VDC:

100 YXG 470 µF; 16 mm x 35,5 mm or

100 ZLH 470 µF 16 mm x 31,5 mm

Other capacitors with equal or greater capacitance and equal or lower serial resistance can also be used.

ebm-papst St. Georgen offers the following capacitors ex stock:

24 VDC: 1000 µF / 50 V, 16 mm x 25 mm

Art. No.: 992 0345 000 (LZ 354)

48 VDC: 680 µF / 100 V, 18 mm x 40 mm

Art. No. : 992 0355 000 (LZ 355)

max. 4,5 m^3/h

DC axial fans

Series 250 25 x 25 x 8 mm

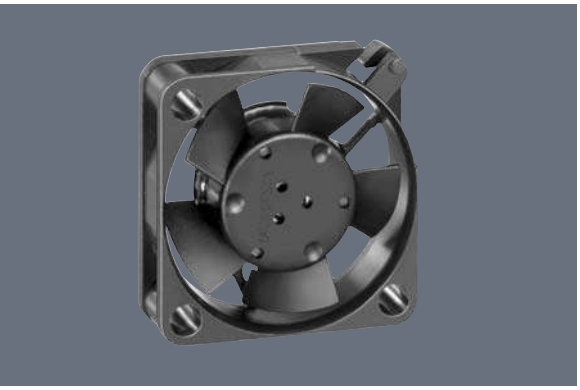

Highlights:
- Compact fan with low power consumption.

General characteristics:
- Material: fibreglass-reinforced plastic. Impeller PA, housing PBT.
- Fully integrated electronic commutation.
- Protected against reverse polarity and locking.
- Connection via single strands AWG 28, TR 64. Bared and tin-plated.
- Air exhaust over struts. Direction of rotation counter-clockwise, seen on rotor.
- Mass: 5 g.

Nominal data	Air flow	Air flow	Nominal voltage	Voltage range	Sound pressure level	Sound power level	Sintec sleeve bearings Ball bearings	Power input	Nominal speed	Temperature range	Service life L_{10} (20 °C) ebm-papst Standard	Service life L_{10} (60 °C) ebm-papst Standard	Life expectancy L_{10} (40 °C) see P. 15	Curve	Specials
Type	m^3/h	CFM	VDC	VDC	dB(A)	Bel(A)	□ / ■	Watts	RPM	°C	Hours		Hours	P. 110	
255 M	2,1	1,2	**5**	4,5...5,5	5	< 3	■	0,2	6 000	-10...+70	45 000 / 14 000		45 000	1	
255 N	3,2	1,9	**5**	4,5...5,5	16	< 3	■	0,4	9 600	-10...+70	40 000 / 12 000		40 000	2	/2
255 H	4,5	2,6	**5**	4,5...5,5	23	4,4	■	0,6	12 000	-10...+55	35 000 / 12 000*		30 000	3	/2
252 N	3,2	1,9	**12**	10...14	15	< 3	■	0,5	9 000	-10...+70	40 000 / 12 000		40 000	2	/2
252 H	4,5	2,6	**12**	10...14	23	4,4	■	0,7	12 000	-10...+55	35 000 / 12 000*		30 000	3	

* at 55 °C

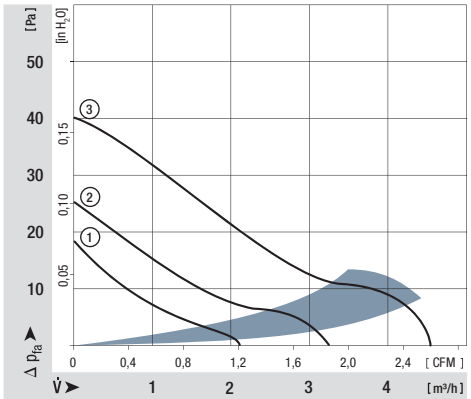

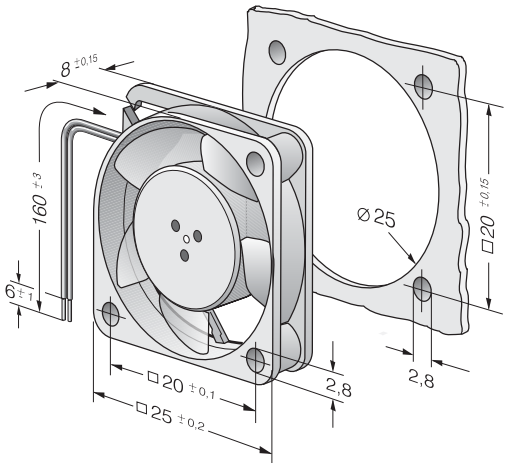

max. 9 m^3/h

DC axial fans

Series 400 F 40 x 40 x 10 mm

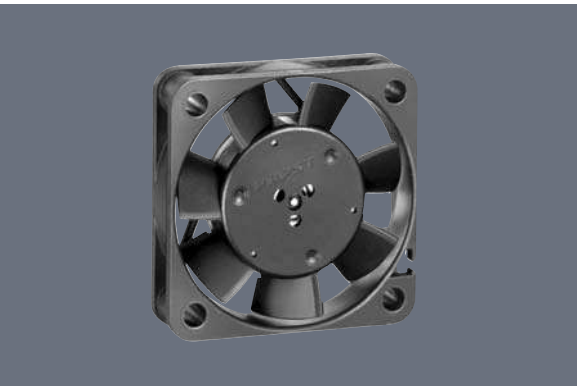

Highlights:
- Compact fan with low power consumption.
- Some models suitable for use at high ambient temperatures.

General characteristics:
- Material: fibreglass-reinforced plastic. impeller PA, housing PBT.
- Fully integrated electronic commutation.
- Protected against reverse polarity and locking.
- Connection via single strands AWG 28, TR 64. Bared and tin-plated.
- Air exhaust over struts. Direction of rotation counter-clockwise, seen on rotor.
- Mass: 17 g.

Nominal data	Air flow	Air flow	Nominal voltage	Voltage range	Sound pressure level	Sound power level	Sintec sleeve bearings □ / Ball bearings ■	Power input	Nominal speed	Temperature range	Service life L_{10} (20 °C) ebm-papst Standard	Service life (60 °C) ebm-papst Standard	Life expectancy $L_{10\Delta}$ (40 °C) see P. 15	Curve	Specials
Type	m^3/h	CFM	VDC	VDC	dB(A)	Bel(A)	□ / ■	Watts	RPM	°C	Hours		Hours	P. 110	
405 F	8	4,7	**5**	4,5...5,5	22,1	4,4	■	0,7	5 400	-20...+70	45 000 / 15 000		47 500	2	/2
405 FH	9	5,3	**5**	4,5...5,5	26,0	4,6	■	0,9	6 000	-20...+70	45 000 / 15 000		47 500	3	/2
412 FM	6	3,5	**12**	10...14	16,5	3,8	■	0,6	4 300	-20...+70	45 000 / 15 000		47 500	1	
412 F	8	4,7	**12**	10...14	22,1	4,4	■	0,7	5 400	-20...+70	45 000 / 15 000		47 500	2	
412 FH	9	5,3	**12**	10...14	26,0	4,6	■	0,8	6 000	-20...+70	45 000 / 15 000		47 500	3	/2
414 F	8	4,7	**24**	20...28	22,1	4,4	■	0,8	5 400	-20...+70	45 000 / 15 000		47 500	2	/2
414 FH	9	5,3	**24**	21,6...26,4	26,0	4,4	■	0,9	6 000	-20...+70	45 000 / 15 000		47 500	3	
Models with temperature range up to +85 °C.															
412 FM-074	6	3,5	**12**	10...14	16,5	3,8	■	0,4	4 300	-20...+85	45 000 / 15 000		47 500	1	/2
412 F-130	8	4,7	**12**	10...14	22,1	4,4	■	0,6	5 400	-20...+85	45 000 / 15 000		47 500	2	
412 FH-132	9	5,3	**12**	10...14	26,0	4,6	■	0,7	6 000	-20...+85	45 000 / 15 000		47 500	3	/2

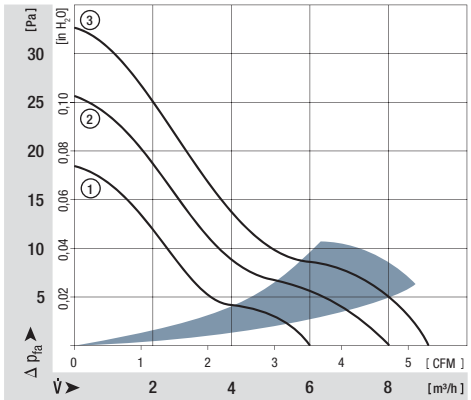

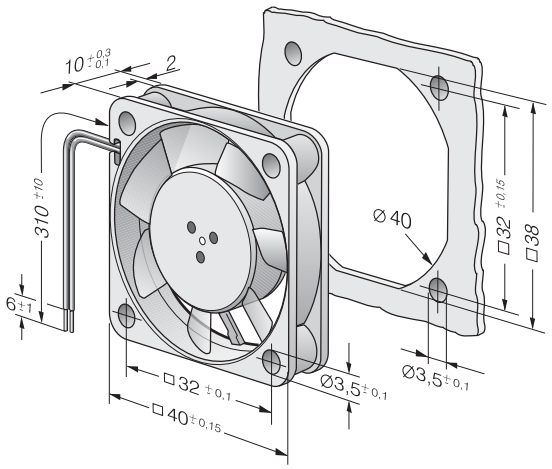

ebmpapst

max. 13,5 m^3/h

DC axial fans

Series 400 40 x 40 x 20 mm

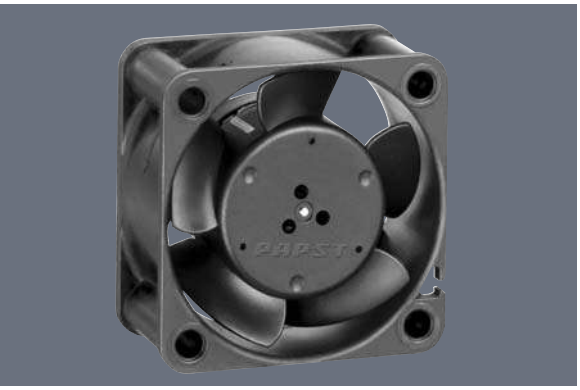

Highlights:
- Compact fan with low power consumption.
- Some models suitable for use at high ambient temperatures.

General characteristics:
- Material: fibreglass-reinforced plastic. Impeller PA, housing PBT.
- Fully integrated electronic commutation.
- Protected against reverse polarity and locking.
- Connection via single strands AWG 28, TR 64. Bared and tin-plated.
- Air exhaust over struts. Direction of rotation counter-clockwise, seen on rotor.
- Mass: 27 g.

Nominal data	Air flow	Air flow	Nominal voltage	Voltage range	Sound pressure level	Sound power level	Sintec sleeve bearings / Ball bearings	Power input	Nominal speed	Temperature range	Service life L_{10} (20 °C) ebm-papst Standard	Service life (60 °C) ebm-papst Standard	Life expectancy $L_{10\Delta}$ (40 °C) see P. 15	Curve	Specials
Type	m^3/h	CFM	VDC	VDC	dB(A)	Bel(A)	□ / ■	Watts	RPM	°C	Hours		Hours	P. 110/118	
405	10,0	5,9	**5**	4,5...5,5	18	3,8	■	0,9	6 000	-20...+70	50 000 / 20 000		62 500	1	/2
412	10,0	5,9	**12**	10...14	18	3,8	■	0,9	6 000	-20...+70	50 000 / 20 000		62 500	1	/2
412 H	13,5	7,9	**12**	10...14	29	4,7	■	1,6	8 100	-20...+60	45 000 / 15 000		47 500	2	/39
414	10,0	5,9	**24**	20...28	18	3,8	■	1,0	6 000	-20...+70	50 000 / 20 000		62 500	1	/2
414 H	13,5	7,9	**24**	20...26,5	29	4,7	■	1,6	8 100	-20...+60	45 000 / 15 000		47 500	2	/2
Model with temperature range up to +85 °C.															
412-099	10,0	5,9	**12**	10...14	18	3,8	■	0,8	6 000	-20...+85	50 000 / 20 000		62 500	1	

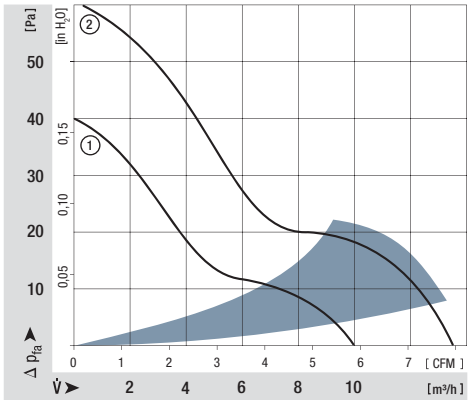

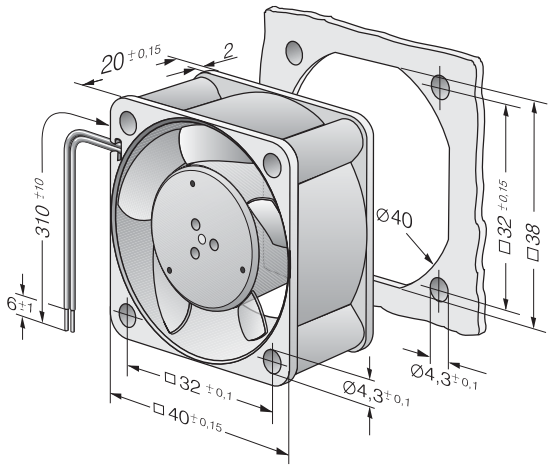

max. 24 m^3/h

DC axial fans

Series 400 J 40 x 40 x 25 mm

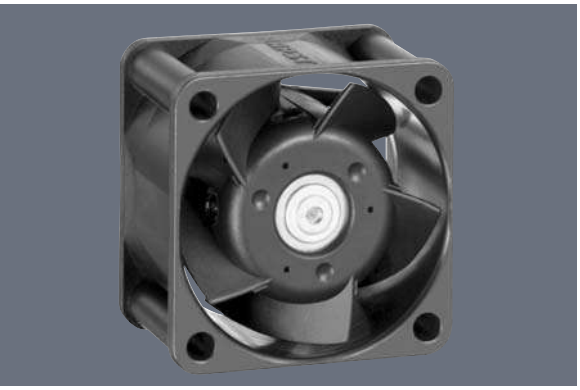

Highlights:
- Very rigid compression curve for high air flow at high back pressure.
- Low operating noise level at high back pressure.

General characteristics:
- Material: fibreglass-reinforced plastic. Impeller PA, housing PBT.
- Fully integrated electronic commutation.
- Protected against reverse polarity and locking.
- Connection via single strands AWG 26, TR 64. Bared and tin-plated.
- Air exhaust over struts. Direction of rotation counter-clockwise, seen on rotor.
- Mass: 50 g.

Nominal data	Air flow	Air flow	Nominal voltage	Voltage range	Sound pressure level	Sound power level	Sintec sleeve bearings □ / Ball bearings ■	Power input	Nominal speed	Temperature range	Service life L_{10} (40 °C) ebm-papst Standard	Service life L_{10} (T_{max}) ebm-papst Standard	Life expectancy $L_{10\Delta}$ (40 °C) see P. 15	Curve	Specials
Type	m^3/h	CFM	VDC	VDC	dB(A)	Bel(A)	□ / ■	Watts	RPM	°C	Hours		Hours	P. 110	
412 J	19	11,2	**12**	8...14	39	5,5	■	2,4	10 300	-20...+70	60 000 / 30 000		120 000	1	
412 JH	22	12,9	**12**	8...13,5	43	5,8	■	3,0	11 700	-20...+70	60 000 / 30 000		120 000	2	/2
412 JHH	24	14,1	**12**	8...13,5	46	6,1	■	3,3	13 000	-20...+60	57 500 / 35 000		110 000	3	/2
414 J	19	11,2	**24**	18...27	39	5,5	■	2,4	10 300	-20...+70	60 000 / 30 000		120 000	1	
414 JH	22	12,9	**24**	18...27	43	5,8	■	3,0	11 700	-20...+70	60 000 / 30 000		120 000	2	/2
414 JHH	24	14,1	**24**	18...27	46	6,1	■	3,6	13 000	-20...+60	57 500 / 35 000		110 000	3	/2

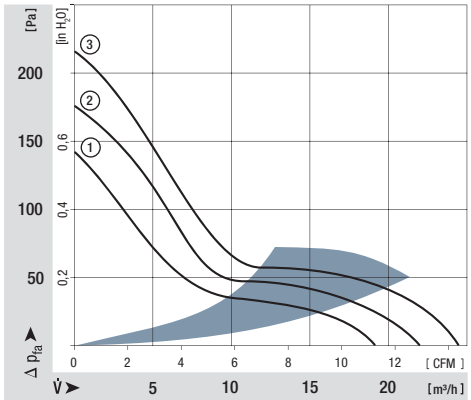

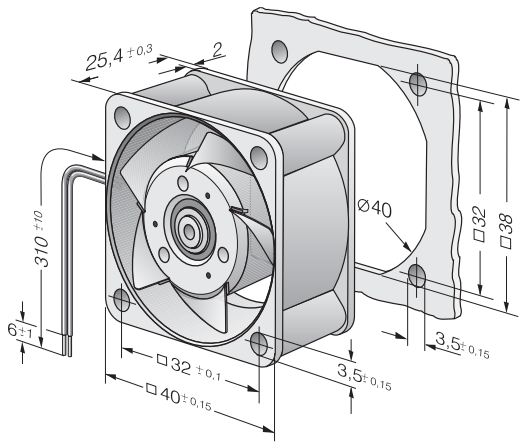

HP IP54

ebmpapst

max. 20 m^3/h

DC axial fans

Series 500 F 50 x 50 x 15 mm

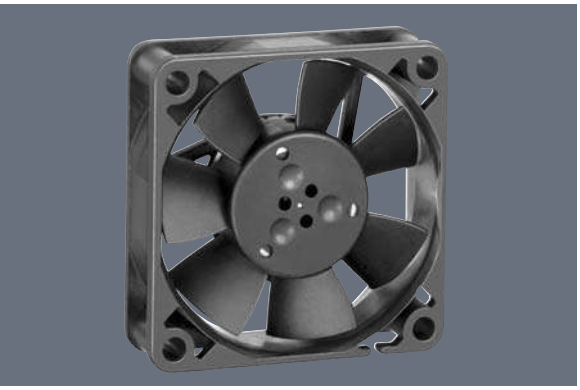

Highlights:
- Compact fan with low power consumption.
- Some models suitable for use at high ambient temperatures.

General characteristics:
- Material: fibreglass-reinforced plastic. Impeller PA, housing PBT.
- Fully integrated electronic commutation.
- Protected against reverse polarity and locking.
- Connection via single strands AWG 28, TR 64. Bared and tin-plated.
- Air exhaust over struts. Direction of rotation counter-clockwise, seen on rotor.
- Mass: 25 g.

Nominal data	Air flow	Air flow	Nominal voltage	Voltage range	Sound pressure level	Sound power level	Sintec sleeve bearings / Ball bearings	Power input	Nominal speed	Temperature range	Service life L_{10} (20 °C) ebm-papst Standard	Service life L_{10} (60 °C) ebm-papst Standard	Life expectancy $L_{10\Delta}$ (40 °C) see P. 15	Curve	Specials
Type	**m^3/h**	**CFM**	**VDC**	**VDC**	**dB(A)**	**Bel(A)**	**□ / ■**	**Watts**	**RPM**	**°C**	**Hours**		**Hours**		**P. 110**
512 F	20	11,8	**12**	10,8...13,2	30	4,5	■	1,0	5 000	-20...+70	50 000 / 20 000		62 500	2	/2
514 F	20	11,8	**24**	21,6...26,4	30	4,5	■	1,0	5 000	-20...+70	50 000 / 20 000		62 500	2	/2
Model with temperature range up to +85 °C.															
512 FL-547	11	6,5	**12**	11,5...13,2	12	3,7	■	0,4	3 000	-20...+85	50 000 / 20 000		65 500	1	
512 F-532	20	11,8	**12**	10,8...13,2	30	4,5	■	0,9	5 000	-20...+85	50 000 / 20 000		65 500	2	

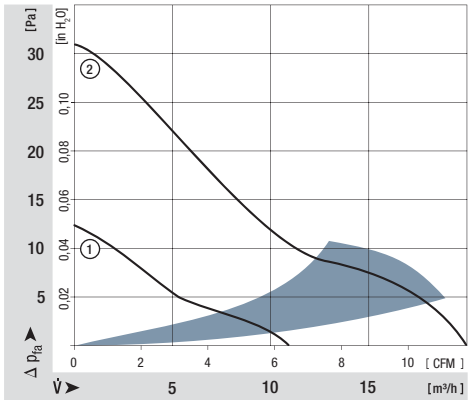

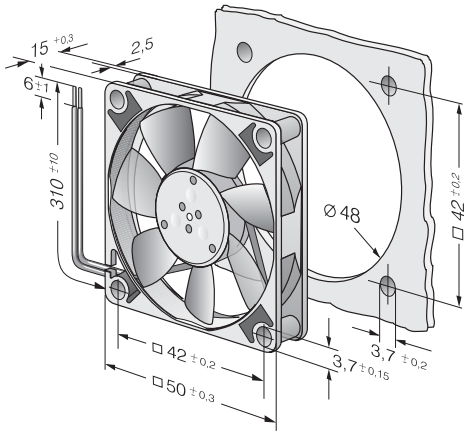

max. 33 m^3/h

DC axial fans

Series 600 F 60 x 60 x 15 mm

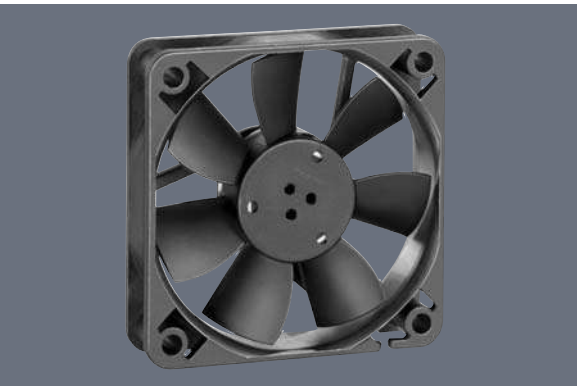

Highlights:
- Compact fan with low power consumption.
- Some models suitable for use at high ambient temperatures.

General characteristics:
- Material: fibreglass-reinforced plastic. Impeller PA, housing PBT.
- Fully integrated electronic commutation.
- Protected against reverse polarity and locking.
- Connection via single strands AWG 28, TR 64. Bared and tin-plated.
- Air exhaust over struts. Direction of rotation counter-clockwise, seen on rotor.
- Mass: 30 g.

Nominal data	Air flow	Air flow	Nominal voltage	Voltage range	Sound pressure level	Sound power level	Sintec sleeve bearings / Ball bearings	Power input	Nominal speed	Temperature range	Service life L_{10} (20 °C) ebm-papst Standard	Service life L_{10} (60 °C) ebm-papst Standard	Life expectancy $L_{10\Delta}$ (40 °C) see P. 15	Curve	Specials
Type	m^3/h	CFM	VDC	VDC	dB(A)	Bel(A)	□ / ■	Watts	RPM	°C	Hours		Hours	P. 110/118	
605 F	29	17,1	**5**	4,5...5,2	27	4,4	■	1,1	4 000	-20...+50	50 000 / 20 000		50 000	2	/2
612 FL	19	11,2	**12**	11,5...13,2	16	3,6	■	0,4	2 650	0...+70	50 000 / 20 000		62 500	1	
612 F	29	17,1	**12**	10,8...13,2	27	4,4	■	1,0	3 900	-20...+70	50 000 / 20 000		62 500	2	/2
612 FH	33	19,4	**12**	10,0...13,2	31	4,8	■	1,4	4 500	-20...+60	45 000 / 15 000		47 500	3	/2/39
614 F	29	17,1	**24**	21,6...26,4	27	4,4	■	1,1	3 900	-20...+70	50 000 / 20 000		62 500	2	/2
Models with temperature range up to +80 / 85 °C.															
612 FL-680	19	11,2	**12**	11,5...14	16	3,6	■	0,5	2 650	-20...+85	50 000 / 20 000		62 500	1	
612 F-637	29	17,1	**12**	10,8...12,6	27	4,4	■	1,0	3 900	-20...+80	50 000 / 20 000		62 500	2	

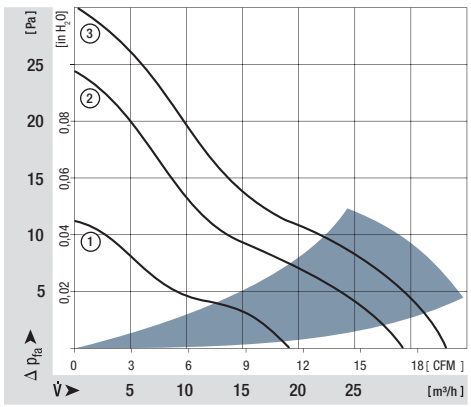

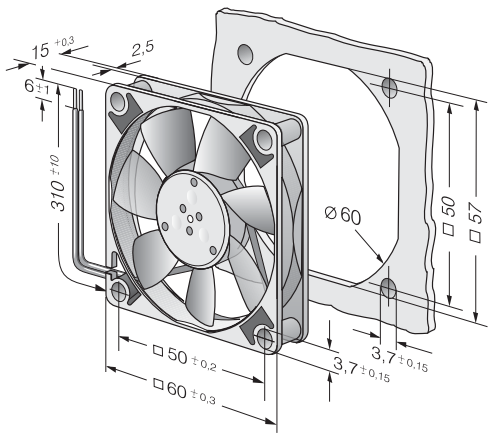

PWM HP

ebmpapst

max. 67 m^3/h

DC axial fans

Series 620 60 x 60 x 25 mm



Highlights:

- Very rigid compression curve for high air flow at high back pressure.
- Motor with very low structure-borne noise.
- Innovative impeller with winglets for low noise.
- Control inputs, alarm and speed signals available on request.

General characteristics:

- Material: fibreglass-reinforced plastic. Impeller PA, housing PBT.
- Fully integrated electronic commutation.
- Protected against reverse polarity and locking.
- Connection via single strands AWG 22, TR 64. Bared and tin-plated.
- Air exhaust over struts. Direction of rotation clockwise, seen on rotor.
- Mass: 85 g.

Nominal data	Air flow	Air flow	Nominal voltage	Voltage range	Sound pressure level	Sound power level	Sintec sleeve bearings / Ball bearings	Power input	Nominal speed	Temperature range	Service life L_{10} (40 °C) ebm-papst Standard	Service life L_{10} (T_{max}) ebm-papst Standard	Life expectancy $L_{10\Delta}$ (40 °C) see P. 15	Curve	Specials
Type	m^3/h	CFM	VDC	VDC	dB(A)	Bel(A)	□ / ■	Watts	RPM	°C	Hours		Hours	P. 110	
622 L	21	12,4	**12**	8...15	20	3,7	■	0,5	3 200	-20...+85	80 000 / 20 000		160 000	1	
622 M	30	17,7	**12**	8...15	29	4,3	■	1,0	4 550	-20...+75	77 500 / 30 000		150 000	2	
622 N	40	23,5	**12**	8...15	35	4,7	■	1,9	6 100	-20...+70	72 500 / 35 000		140 000	3	/2
622 H	46	27,1	**12**	8...15	39	5,1	■	2,3	6 850	-20...+70	70 000 / 35 000		140 000	4	
622 HH	56	33,0	**12**	8...15	43	5,6	■	3,5	8 200	-20...+70	65 000 / 32 500		130 000	5	
NEW 622 /2H3P	67	39,4	**12**	8...13,2	48	5,9	■	6,3	9 700	-20...+60	52 500 / 32 500		105 000	6	
624 L	21	12,4	**24**	18...28	20	3,7	■	1,0	3 200	-20...+70	80 000 / 40 000		160 000	1	
624 M	30	17,7	**24**	12...28	29	4,3	■	1,5	4 550	-20...+70	77 500 / 37 500		150 000	2	
624 N	40	23,5	**24**	12...28	35	4,7	■	2,2	6 100	-20...+70	72 500 / 35 000		140 000	3	
624 H	46	27,1	**24**	18...28	39	5,1	■	2,4	6 850	-20...+70	70 000 / 35 000		140 000	4	
624 HH	56	33,0	**24**	18...28	43	5,6	■	3,6	8 200	-20...+70	65 000 / 32 500		130 000	5	/2
NEW 624 /2H3P	67	39,4	**24**	18...28	48	5,9	■	5,8	9 700	-20...+60	52 500 / 32 500		105 000	6	
628 HH	56	33,0	**48**	36...56	43	5,6	■	4,2	8 200	-20...+70	65 000 / 32 500		130 000	5	/2

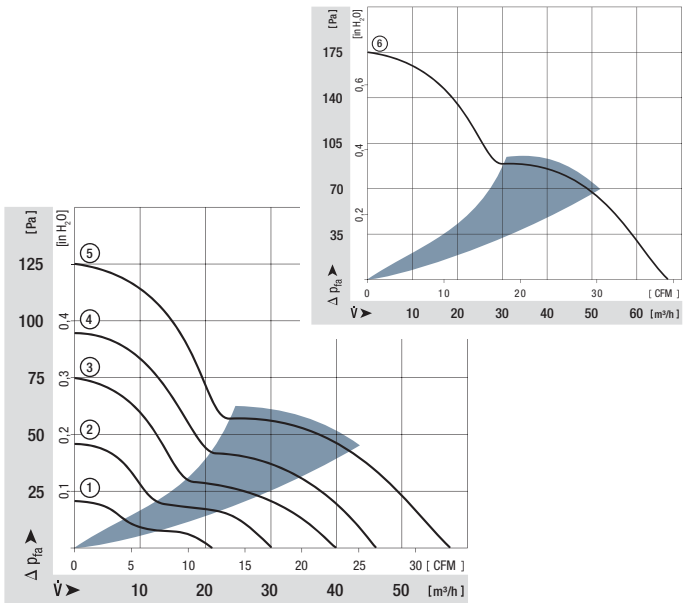

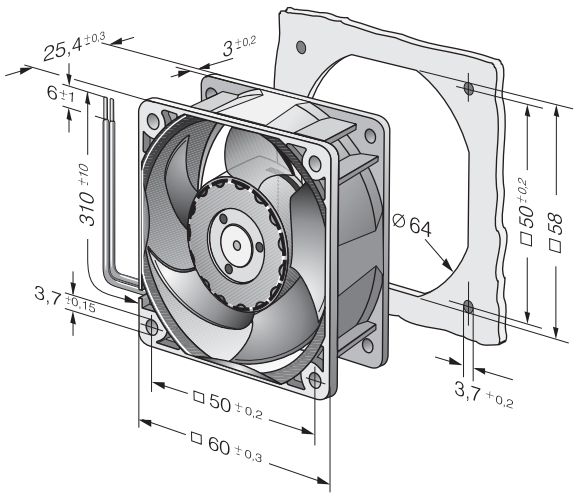

max. 44 m^3/h

DC axial fans

Series 630 60 x 60 x 25 mm



Highlights:
- Very rigid compression curve for high air flow at high back pressure.
- Motor with very low structure-borne noise.
- Control inputs, alarm and speed signals available on request.
- Developed for applications with stringent environmental requirements.

General characteristics:
- Material: fibreglass-reinforced plastic. Impeller PA, housing PBT.
- Fully integrated electronic commutation.
- Protected against reverse polarity and locking.
- Connection via single strands AWG 22, TR 64. Bared and tin-plated.
- Air exhaust over struts. Direction of rotation clockwise, seen on rotor.
- Mass: 70 g.

	Nominal data	Air flow	Air flow	Nominal voltage	Voltage range	Sound pressure level	Sound power level	Sintec sleeve bearings / Ball bearings	Power input	Nominal speed	Temperature range	Service life L_{10} (40 °C) ebm-papst Standard	Service life L_{10} (T_{max}) ebm-papst Standard	Life expectancy $L_{10\Delta}$ (40 °C) see P. 15	Curve	Specials
	Type	m^3/h	CFM	VDC	VDC	dB(A)	Bel(A)	□ / ■	Watts	RPM	°C	Hours		Hours		
NEW	632 NU	40	23,5	**12**	6...15	33	5,2	■	1,8	5 900	-20...+70	85 000 / 42 500		170 000	1	
NEW	632 /2HPU	44	25,9	**12**	10,8...13,2	35	5,4	■	1,5	6 400	-20...+70	85 000 / 42 500		170 000	2	
NEW	638 /2HPU	44	25,9	**48**	40...60	35	5,4	■	1,8	6 400	-20...+70	85 000 / 42 500		170 000	2	

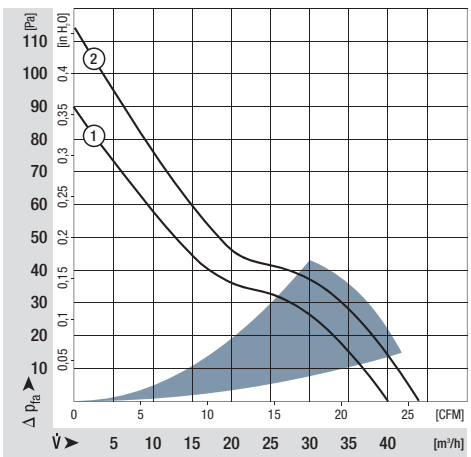

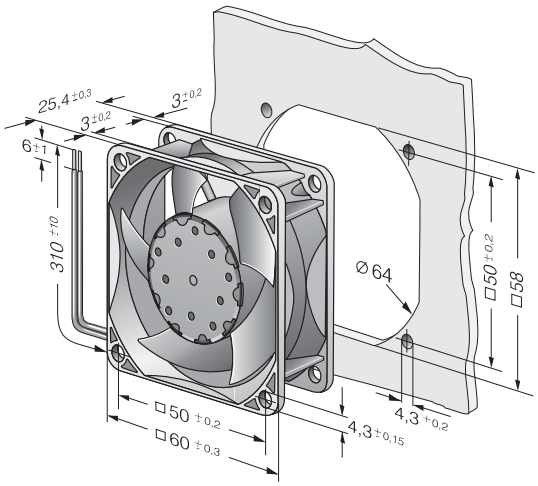

ebmpapst

max. 56 m^3/h

DC axial fans

Series 600 N 60 x 60 x 25 mm

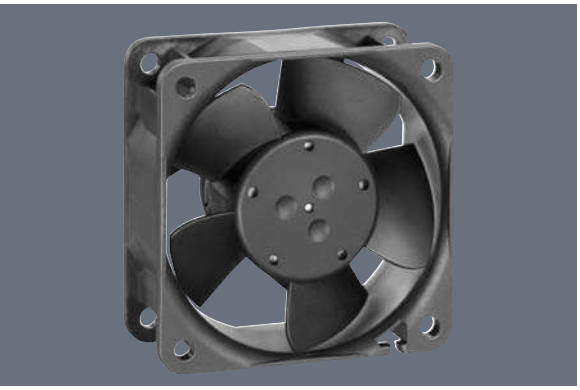

Highlights:

- Ball bearings and sleeve bearings available.
- Some models suitable for use at high ambient temperatures up to 85 °C.

General characteristics:

- Material: fibreglass-reinforced plastic. Impeller PA, housing PBT.
- Fully integrated electronic commutation.
- Protected against reverse polarity and locking.
- Connection via single strands AWG 22, TR 64. Bared and tin-plated.
- Air exhaust over struts. Direction of rotation clockwise, seen on rotor.
- Mass: 66 g.

Nominal data	Air flow	Air flow	Nominal voltage	Voltage range	Sound pressure level	Sound power level	Sintec sleeve bearings / Ball bearings	Power input	Nominal speed	Temperature range	Service life L_{10} (40 °C) ebm-papst Standard	Service life L_{10} (T_{max}) ebm-papst Standard	Life expectancy $L_{10\Delta}$ (40 °C) see P. 15	Curve	Specials
Type	m^3/h	CFM	VDC	VDC	dB(A)	Bel(A)	□ / ■	Watts	RPM	°C	Hours		Hours	P. 110-118	
612 NGLE	21	12,4	**12**	8...15	16	3,6	□	0,6	2 500	-20...+85	80 000 / 27 500		160 000	1	
612 NLE	21	12,4	**12**	8...15	16	3,6	■	0,4	2 500	-20...+85	80 000 / 27 500		160 000	1	
612 NGMLE	25	14,7	**12**	8...15	19	3,9	□	0,7	3 000	-20...+80	80 000 / 32 500		160 000	2	
612 NMLE	25	14,7	**12**	8...15	19	3,9	■	0,4	3 000	-20...+85	80 000 / 27 500		160 000	2	
612 NGME	35	20,6	**12**	8...15	28	4,6	□	1,2	4 100	-20...+75	80 000 / 35 000		160 000	3	
612 NME	35	20,6	**12**	8...15	28	4,6	■	0,8	4 100	-20...+75	80 000 / 35 000		160 000	3	/2
612 NN	42	24,7	**12**	8...15	35	5,0	■	1,6	5 100	-20...+70	70 000 / 35 000		140 000	4	
612 NH	46	27,1	**12**	8...15	37	5,3	■	2,0	5 600	-20...+70	70 000 / 35 000		140 000	5	/2
612 NHH-118	56	33,0	**12**	8...15	41	5,7	■	2,9	6 800	-20...+70	60 000 / 30 000		120 000	6	/2
614 NGL	21	12,4	**24**	18...28	16	3,6	□	1,0	2 500	-20...+70	80 000 / 40 000		160 000	1	
614 NL	21	12,4	**24**	18...28	16	3,6	■	0,9	2 500	-20...+70	80 000 / 40 000		160 000	1	/2
614 NGML	25	14,7	**24**	18...28	19	3,9	□	1,2	3 000	-20...+70	80 000 / 40 000		160 000	2	/2
614 NML	25	14,7	**24**	18...28	19	3,9	■	1,0	3 000	-20...+70	80 000 / 40 000		160 000	2	
614 NGM	35	20,6	**24**	18...28	28	4,6	□	1,7	4 100	-20...+70	80 000 / 40 000		160 000	3	/12
614 NM	35	20,6	**24**	18...28	28	4,6	■	1,4	4 100	-20...+70	80 000 / 40 000		160 000	3	/2/39
614 NN	42	24,7	**24**	18...28	35	5,0	■	1,8	5 100	-20...+70	70 000 / 35 000		140 000	4	
614 NH	46	27,1	**24**	18...26	37	5,3	■	2,1	5 600	-20...+70	70 000 / 35 000		140 000	5	/2
614 NHH	56	33,0	**24**	18...26	41	5,7	■	3,0	6 850	-20...+70	60 000 / 30 000		120 000	6	
614 NHH-119	56	33,0	**24**	18...28	41	5,7	■	3,0	6 850	-20...+70	60 000 / 30 000		120 000	6	/2
618 NM	35	20,6	**48**	36...56	28	4,6	■	1,4	4 100	-20...+70	80 000 / 40 000		160 000	3	
618 NN	42	24,7	**48**	36...56	35	5,0	■	2,1	5 100	-20...+65	70 000 / 40 000		140 000	4	/2/12/39

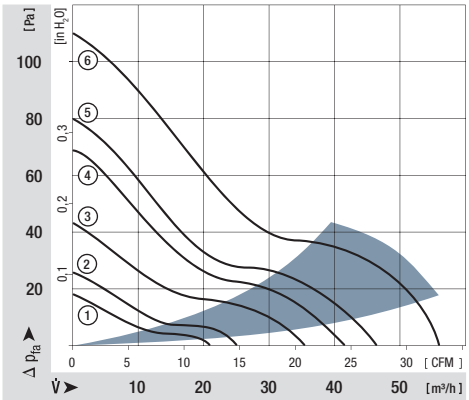

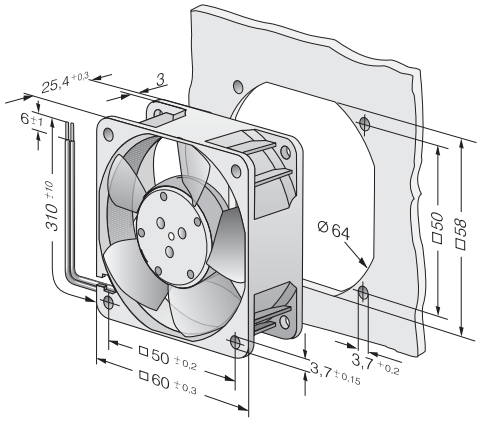

max. 41 m^3/h

DC axial fans

Series 600 N VARIOFAN 60 x 60 x 25 mm

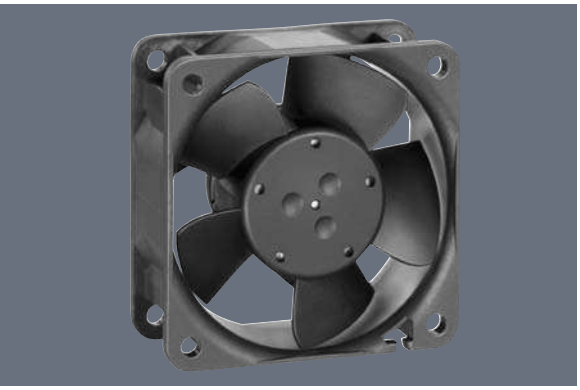

Highlights:

- Open loop speed control by means of external or internal temperature sensor.
- Automatic speed adjustment according to cooling requirements.

General characteristics:

- Material: fibreglass-reinforced plastic. Impeller PA, housing PBT.
- Fully integrated electronic commutation.
- Protected against reverse polarity and locking.
- Connection via single strands AWG 22, TR 64. Bared and tin-plated.
- Air exhaust over struts. Direction of rotation clockwise, seen on rotor.
- Mass: 66 g.

Nominal data		Air flow	Air flow	Nominal voltage	Voltage range	Sound pressure level	Sound power level	Sintec sleeve bearings / Ball bearings	Power input	Nominal speed	Temperature range	Service life L_{10} (40 °C) ebm-papst Standard	Service life L_{10} (T_{max}) ebm-papst Standard	Life expectancy $L_{10\Delta}$ (40 °C) see P. 15	Curve	Specials
	Type	m^3/h	CFM	VDC	VDC	dB(A)	Bel(A)	□ / ■	Watts	RPM	°C	Hours		Hours		
30°C	612 NGMI	18	10,6	12	8...12,6	14	3,5	□	1,3	2 150	-20...+65	80 000 / 45 000		160 000	1	
55°C		35	20,6			28	4,6		1,7	4 100					2	
30°C	612 NMI	16	9,4	12	8...12,6	16	3,6	■	1,0	2 400	-20...+65	80 000 / 45 000		160 000	3	
55°C		35	20,6			28	4,6		1,4	4 100					4	
30°C	612 NGNI	23	13,5	12	8...12,6	18	3,8	□	1,7	2 900	-20...+65	70 000 / 40 000		142 500	5	
55°C		41	24,1			35	5,0		2,4	5 100					6	
30°C	612 NNI	23	13,5	12	8...12,6	18	3,8	■	1,2	2 900	-20...+65	70 000 / 40 000		142 500	5	
55°C		41	24,1			35	5,0		1,5	5 100					6	
30°C	612 NGNV	23	13,5	12	8...12,6	18	3,8	□	1,7	2 900	-20...+65	70 000 / 40 000		142 500	5	
55°C		41	24,1			35	5,0		2,4	5 100					6	

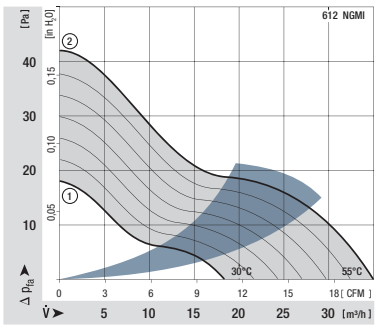

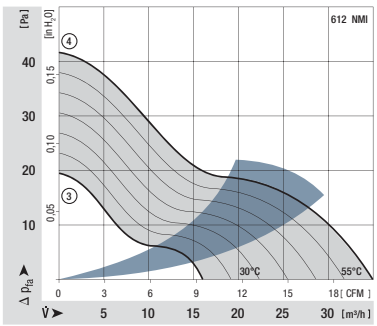

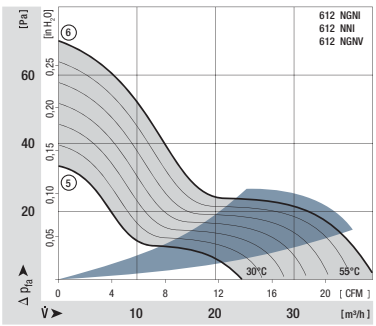

V-Types

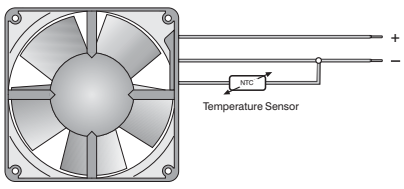

The temperature sensor for controlling the motor speed is not included in delivery.
Temperature sensor LZ 370 see accessories.

I-Types

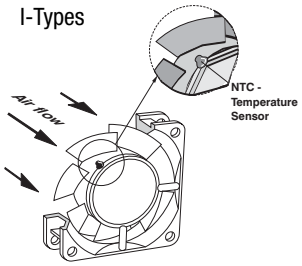

Temperature sensor (NTC-resistor) for controlling the motor speed is positioned directly in the air flow.

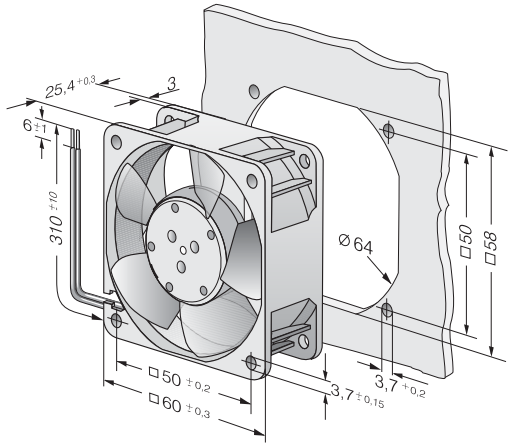

ebmpapst

max. 82 m^3/h

DC axial fans

Series 600 J 60 x 60 x 32 mm



Highlights:

- Very rigid compression curve for high air flow at high back pressure.
- Innovative impeller with winglets for low noise.

General characteristics:

- Material: fibreglass-reinforced plastic. Impeller PA, housing PBT.
- Fully integrated electronic commutation.
- Protected against reverse polarity and locking.
- Connection via single strands AWG 24, TR 64. Bared and tin-plated.
- Air exhaust over struts. Direction of rotation clockwise, seen on rotor.
- Mass: 100 g.

	Nominal data	Air flow	Air flow	Nominal voltage	Voltage range	Sound pressure level	Sound power level	Sintec sleeve bearings / Ball bearings	Power input	Nominal speed	Temperature range	Service life L_{10} (40 °C) ebm-papst Standard / Service life L_{10} (T_{max}) ebm-papst Standard	Life expectancy $L_{10\Delta}$ (40 °C) see P. 15	Curve	Specials
	Type	m^3/h	CFM	VDC	VDC	dB(A)	Bel(A)	□ / ■	Watts	RPM	°C	Hours	Hours	P. 110	
	612 JH	70	41,1	**12**	7...13,6	53	6,4	■	7,7	11 700	-20...+70	57 500 / 27 500	115 000	1	/2
	614 JH	70	41,1	**24**	14...26,4	53	6,4	■	7,7	11 700	-20...+70	57 500 / 27 500	115 000	1	/2
	618 JH	70	41,1	**48**	36...60	53	6,4	■	7,7	11 700	-20...+70	57 500 / 27 500	115 000	1	
	Fan types with streamer and integrated guard grille.														
NEW	614 J/2HHP	82	48,3	**24**	18...30	62	7,6	■	14,6	15 000	-20...+75	65 000 / 25 000	130 000	2	
NEW	618 J/2HHP	82	48,3	**48**	38...58	62	7,6	■	14,6	15 000	-20...+75	65 000 / 25 000	130 000	2	

Rear view of types 614 J/2HHP and 618 J/2HHP

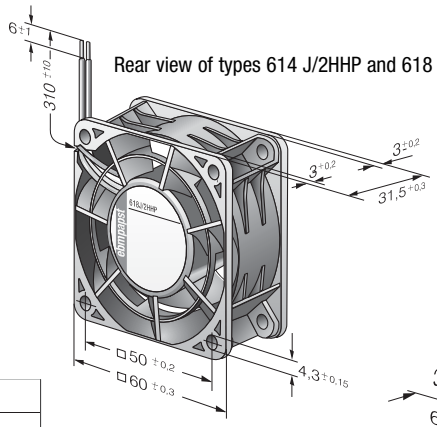

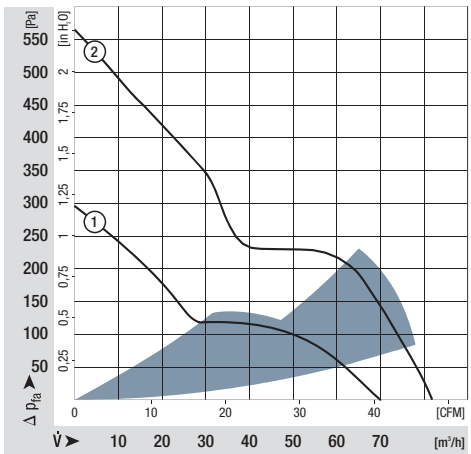

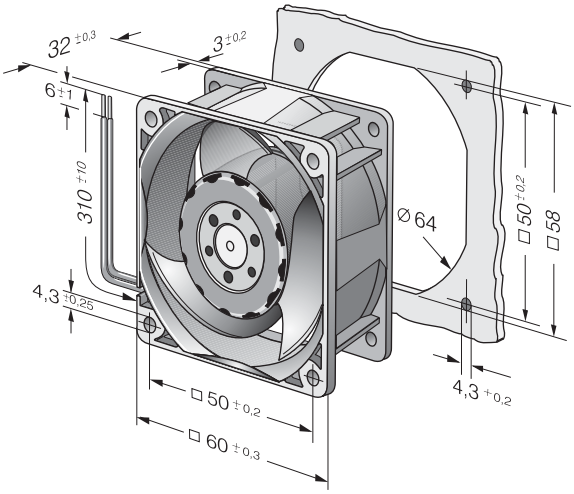

max. 44 m^3/h

DC axial fans

Series 700 F 70 x 70 x 15 mm

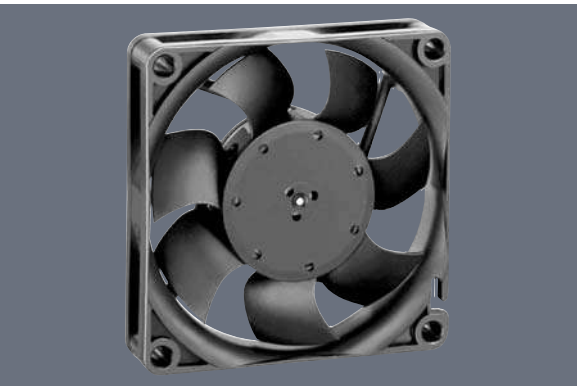

Highlights:

- Very rigid compression curve for high air flow at high back pressure.
- Low operating noise level at high back pressure.

General characteristics:

- Material: fibreglass-reinforced plastic. Impeller PA, housing PBT.
- Fully integrated electronic commutation.
- Protected against reverse polarity and locking.
- Connection via single strands AWG 24 to AWG 28, TR 64. Bared and tin-plated.
- Air exhaust over struts. Direction of rotation counter-clockwise, seen on rotor.
- Mass: 53 g.

Nominal data	Air flow	Air flow	Nominal voltage	Voltage range	Sound pressure level	Sound power level	Sintec sleeve bearings □ / Ball bearings ■	Power input	Nominal speed	Temperature range	Service life L_{10} (40 °C) ebm-papst Standard	Service life L_{10} (T_{max}) ebm-papst Standard	Life expectancy $L_{10\Delta}$ (40 °C) see P. 15	Curve	Specials
Type	m^3/h	CFM	VDC	VDC	dB(A)	Bel(A)	□ / ■	Watts	RPM	°C	Hours		Hours	P. 110	
712 F/2L-005*	28	16,5	**12**	8...13,8	25	4,7	■	0,6	3 300	-20...+70	60 000 / 30 000		120 000	1	/2
712 F/2M-006*	36	21,2	**12**	8...13,8	32	5,0	■	1,1	4 300	-20...+70	60 000 / 30 000		120 000	2	/2
712 F	44	25,9	**12**	8...13,8	38	5,3	■	1,7	5 300	-20...+70	60 000 / 30 000		120 000	3	/2
714 F	44	25,9	**24**	18...28	38	5,3	■	1,5	5 300	-20...+70	60 000 / 30 000		120 000	3	

*Version with 3-pole Molex plug housing 22-01-2035
Molex Contacts 08-50-0113

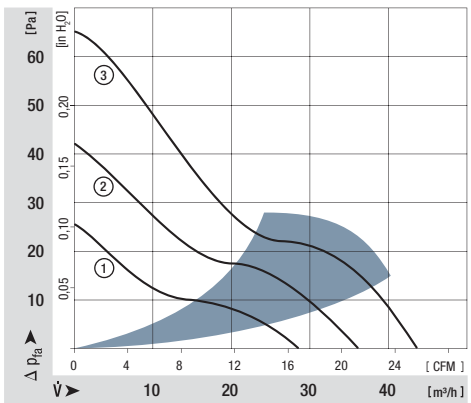

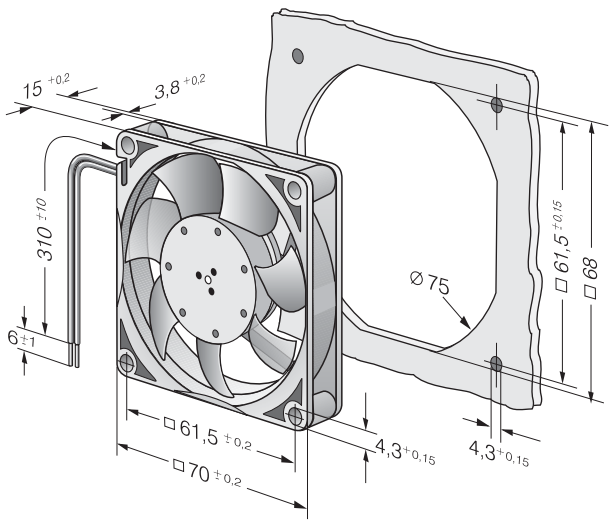

ebmpapst

max. 117 m^3/h

DC axial fans

Series 8450 80 x 80 x 25 mm



Highlights:
- Highly stable characteristic curve for high air flow at high back pressure.
- Motor with very low structure-borne noise properties.
- Innovative impeller with winglets for low noise.
- Extremely quiet Sintec sleeve bearing / ball bearing.
- Models with PWM control and open collector speed signal.

General characteristics:
- Material: fibreglass-reinforced plastic. Impeller PA, housing PBT.
- Fully integrated electronic commutation.
- Protected against reverse polarity and locking.
- Connection via single strands AWG 24, TR 64. Bared and tin-plated.
- Air exhaust over struts. Direction of rotation counter-clockwise, seen on rotor.
- Mass: 105 g.

	Nominal data	Air flow	Air flow	Nominal voltage	Voltage range	Sound pressure level	Sound power level	Sintec sleeve bearings / Ball bearings	Power input	Nominal speed	Temperature range	Service life L_{10} (40 °C) ebm-papst Standard	Service life L_{10} (T_{max}) ebm-papst Standard	Life expectancy $L_{10\Delta}$ (40 °C) see P. 15	Curve	Specials
	Type	m^3/h	CFM	VDC	VDC	dB(A)	Bel(A)	□ / ■	Watts	RPM	°C	Hours		Hours		
	8452 GL	32	18,8	**12**	8...15	14	3,3	□	0,4	1 700	-20...75	80 000 / 35 000		160 000	1	
	8452 GM	58	34,1	**12**	8...15	32	4,7	□	1,3	3 100	-20...75	80 000 / 35 000		160 000	2	
	8452 GN	68	40,0	**12**	8...15	36	5,0	□	1,8	3 600	-20...70	70 000 / 35 000		140 000	3	
	Models with 25 kHz PWM control and speed signal to 4-wire specification (see P. 121).															
	8452 /2 GHP	75	44,1	**12**	10,8...13,2	38	5,3	□	2,5	4 000	-20...70	70 000 / 35 000		140 000	4	
	8452 /2 GHHP	83	48,8	**12**	10,8...13,2	42	5,5	□	3,5	4 400	-20...60	65 000 / 40 000		130 000	5	
	Models with 1-30 kHz PWM control and speed signal.															
NEW	8452 /2 H4P	117	68,8	**12**	8...15	50	6,4	■	6,8	6 200	-20...70	60 000 / 30 000		120 000	6	
NEW	8454 /2 H4P	117	68,8	**24**	20,0...26,4	50	6,4	■	6,8	6 200	-20...70	60 000 / 30 000		120 000	6	

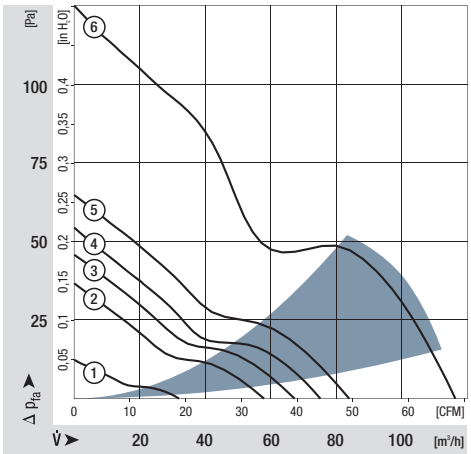

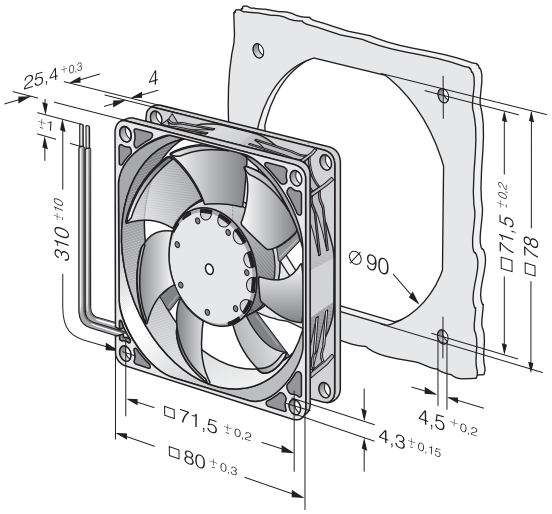

max. 79 m^3/h

DC axial fans

Series 8400 N 80 x 80 x 25 mm

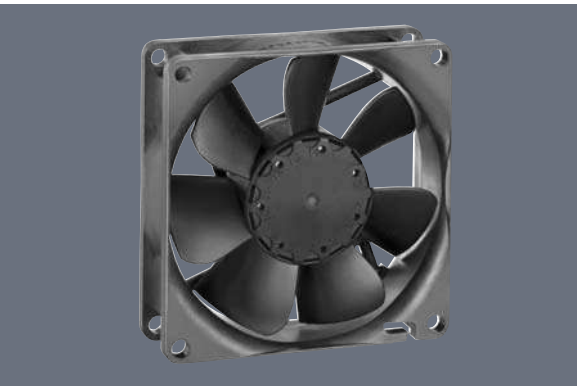

Highlights:
- Ball bearings and sleeve bearings available.
- Some models suitable for use at high ambient temperatures up to 85 °C.

General characteristics:
- Material: fibreglass-reinforced plastic. Impeller PA, housing PBT.
- Fully integrated electronic commutation.
- Protected against reverse polarity and locking.
- Connection via single strands AWG 24, TR 64. Bared and tin-plated.
- Air exhaust over struts. Direction of rotation counter-clockwise, seen on rotor.
- Mass: 95 g.

Nominal data	Air flow	Air flow	Nominal voltage	Voltage range	Sound pressure level	Sound power level	Sintec sleeve bearings □ / Ball bearings ■	Power input	Nominal speed	Temperature range	Service life L_{10} (40 °C) ebm-papst Standard / Service life L_{10} (T_{max}) ebm-papst Standard	Life expectancy L_{10} (40 °C) see P. 15	Curve	Specials
Type	m^3/h	CFM	VDC	VDC	dB(A)	Bel(A)	□ / ■	Watts	RPM	°C	Hours	Hours	P. 110/112	
8412 NGLE	33	19,4	**12**	8...15	12	3,5	□	0,5	1 500	-20...+85	80 000 / 27 500	160 000	1	/2
8412 NLE	33	19,4	**12**	8...15	17	3,7	■	0,3	1 500	-20...+85	80 000 / 27 500	160 000	1	
8412 NGMLE	45	26,5	**12**	8...15	19	3,9	□	0,9	2 050	-20...+80	80 000 / 32 500	160 000	2	
8412 NMLE	45	26,5	**12**	8...15	21	4,0	■	0,6	2 050	-20...+85	80 000 / 27 500	160 000	2	
8412 NGME	58	34,1	**12**	8...15	26	4,3	□	1,4	2 600	-20...+75	80 000 / 35 000	160 000	3	/2
8412 NME	58	34,1	**12**	8...15	27	4,4	■	1,0	2 600	-20...+75	80 000 / 35 000	160 000	3	
8412 NG	69	40,6	**12**	8...15	32	4,7	□	2,0	3 100	-20...+70	70 000 / 35 000	140 000	4	/2
8412 N	69	40,6	**12**	8...15	32	4,7	■	2,0	3 100	-20...+70	70 000 / 35 000	140 000	4	/2
8412 NH	79	46,5	**12**	8...13,2	37	5,0	■	2,2	3 600	-20...+70	70 000 / 35 000	140 000	5	/2/12
8412 NH-217	79	46,5	**12**	8...15	37	5,0	■	2,4	3 600	-20...+70	70 000 / 35 000	140 000	5	
8414 NGL	33	19,4	**24**	18...28	12	3,5	□	0,7	1 500	-20...+70	80 000 / 40 000	160 000	1	/2
8414 NL	33	19,4	**24**	18...28	17	3,7	■	0,7	1 500	-20...+70	80 000 / 40 000	160 000	1	
8414 NGML	45	26,5	**24**	18...28	19	3,9	□	1,1	2 050	-20...+70	80 000 / 40 000	160 000	2	
8414 NML	45	26,5	**24**	18...28	21	4,0	■	1,1	2 050	-20...+70	80 000 / 40 000	160 000	2	
8414 NGM	58	34,1	**24**	18...28	26	4,3	□	1,4	2 600	-20...+70	80 000 / 40 000	160 000	3	/2
8414 NM	58	34,1	**24**	18...28	27	4,4	■	1,4	2 600	-20...+70	80 000 / 40 000	160 000	3	
8414 NG	69	40,6	**24**	18...28	32	4,7	□	2,0	3 100	-20...+70	70 000 / 35 000	140 000	4	/2
8414 N	69	40,6	**24**	18...28	32	4,7	■	2,0	3 100	-20...+70	70 000 / 35 000	140 000	4	/2
8414 NH	79	46,5	**24**	18...26	37	5,0	■	2,4	3 600	-20...+70	70 000 / 35 000	140 000	5	/2
8414 NH-221	79	46,5	**24**	18...28	37	5,0	■	2,4	3 600	-20...+70	70 000 / 35 000	140 000	5	
8418 N	69	40,6	**48**	36...56	32	4,7	■	2,0	3 100	-20...+70	70 000 / 35 000	140 000	4	

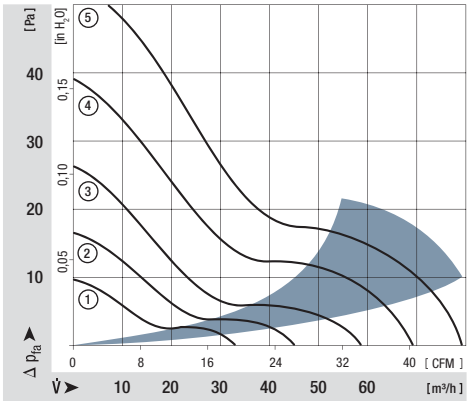

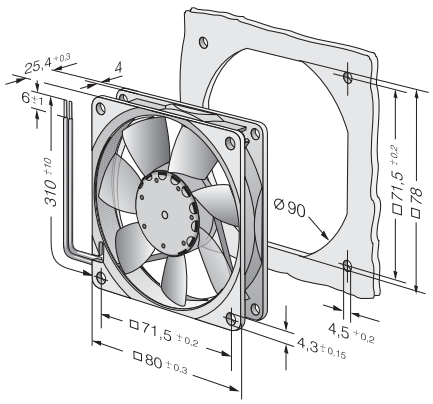

NG PWM A HP IP54

ebmpapst

max. 58 m^3/h

DC axial fans

Series 8400 N VARIOFAN 80 x 80 x 25 mm

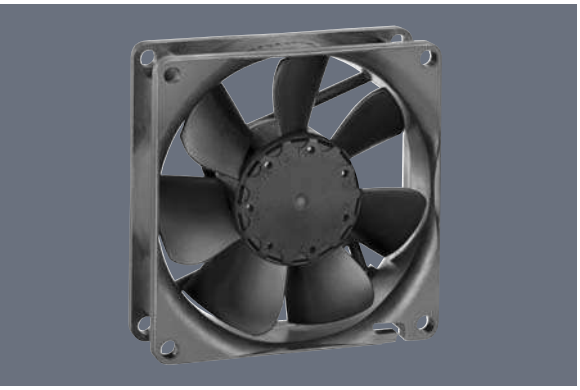

Highlights:

- Open loop speed control by means of (external or internal) temperature sensor.
- Automatic speed adjustment according to cooling requirements.

General characteristics:

- Material: fibreglass-reinforced plastic. Impeller PA, housing PBT.
- Fully integrated electronic commutation.
- Protected against reverse polarity and locking.
- Connection via single strands AWG 24, TR 64. Bared and tin-plated.
- Air exhaust over struts. Direction of rotation counter-clockwise, seen on rotor.
- Mass: 95 g.

Nominal data		Air flow	Air flow	Nominal voltage	Voltage range	Sound pressure level	Sound power level	Sintec sleeve bearings / Ball bearings	Power input	Nominal speed	Temperature range	Service life L_{10} (40 °C) ebm-papst Standard	Service life L_{10} (T_{max}) ebm-papst Standard	Life expectancy L_{10} (40 °C) see P. 15	Curve	Specials
Type		m^3/h	CFM	VDC	VDC	dB(A)	Bel(A)	□ / ■	Watts	RPM	°C	Hours		Hours	P. 117	
30°C	8412 NGLV	20	11,8	12	10...14	< 10	< 3	□	0,9	900	-20...+70	80 000 / 40 000		160 000	1	
50°C		33	19,4			12	3,5		1,1	1 500					2	
30°C	8412 NGMLV	27	15,9	12	8...14	< 10	3,0	□	1,1	1 200	-20...+70	80 000 / 40 000		160 000	3	/37
50°C		45	26,6			19	3,9		1,5	2 050					4	
30°C	8412 NGMI	35	20,6	12	8...14	< 13	3,5	□	1,4	1 600	-20...+70	80 000 / 35 000		125 000	5	
50°C		58	34,1			26	4,3		2,0	2 600					6	

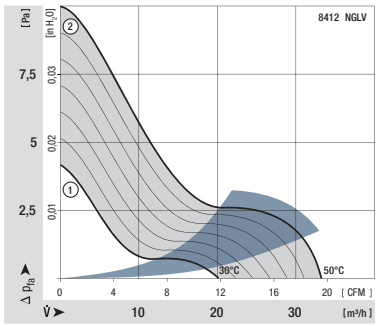

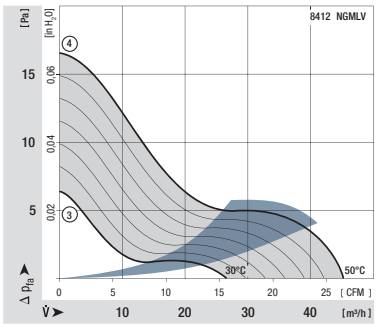

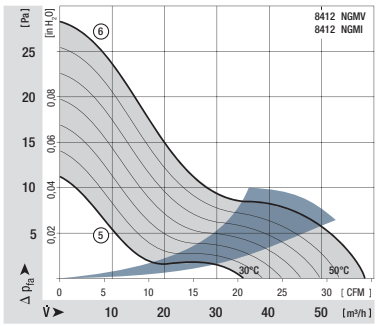

V-Types

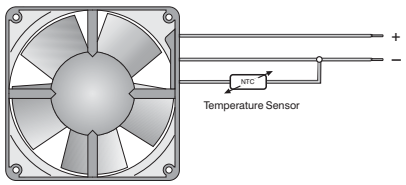

The temperature sensor for controlling the motor speed is not included in delivery.
Temperature sensor LZ 370 see accessories.

I-Types

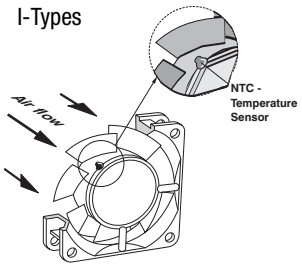

Temperature sensor (NTC-resistor) for controlling the motor speed is positioned directly in the air flow.

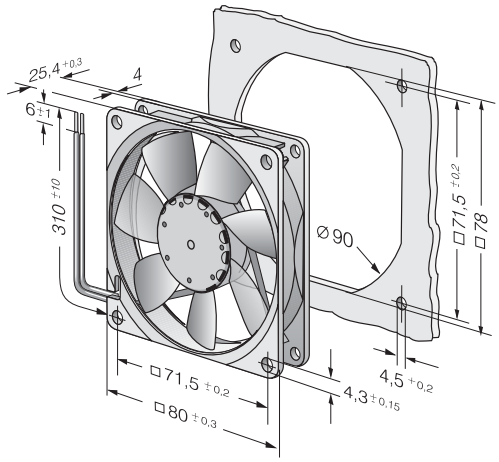

max. 80 m^3/h

DC axial fans

Series 8300 80 x 80 x 32 mm



Highlights:

– Optional Vario-Pro: Highly adaptable software configuration of the fan enables a tailor-made solution to the specific requirements of your applications.

General characteristics:

– Material: fibreglass-reinforced plastic. Impeller PA, housing PBT.
– Fully integrated electronic commutation.
– Protected against reverse polarity and locking.
– Connection via single strands AWG 22, TR 64. Bared and tin-plated.
– Air exhaust over struts. Direction of rotation clockwise, seen on rotor.
– Mass: 170 g.

Nominal data	Air flow	Air flow	Nominal voltage	Voltage range	Sound pressure level	Sound power level	Sintec sleeve bearings / Ball bearings	Power input	Nominal speed	Temperature range	Service life L_{10} (40 °C) ebm-papst Standard / Service life L_{10} (T_{max}) ebm-papst Standard	Life expectancy $L_{10\Delta}$ (40 °C) see P. 15	Curve	Specials
Type	m^3/h	CFM	VDC	VDC	dB(A)	Bel(A)	□ / ■	Watts	RPM	°C	Hours	Hours	P. 110-116	
8312 L	32	18,8	**12**	6...15	24	4,0	■	1,2	2 000	-20...+75	80 000 / 32 500	160 000	1	
8312 M	48	28,3	**12**	6...15	34	5,0	■	2,2	3 000	-20...+75	70 000 / 27 500	140 000	2	
8312	54	31,8	**12**	6...15	36	5,2	■	2,6	3 300	-20...+75	70 000 / 27 500	140 000	3	
8312 HL	67	39,4	**12**	6...15	43	5,8	■	4,0	4 200	-20...+75	62 500 / 25 000	125 000	4	/2
8312 H	80	47,1	**12**	6...12,6	48	6,2	■	6,5	5 000	-20...+60	55 000 / 35 000	110 000	5	
8314 L	32	18,8	**24**	12...31,5	24	4,0	■	1,0	2 000	-20...+75	80 000 / 32 500	160 000	1	
8314 M	48	28,3	**24**	12...31,5	34	5,0	■	2,3	3 000	-20...+75	70 000 / 27 500	140 000	2	
8314	54	31,8	**24**	12...31,5	36	5,2	■	2,7	3 300	-20...+75	70 000 / 27 500	140 000	3	/2
8314 HL	67	39,4	**24**	12...31,5	43	5,8	■	4,3	4 200	-20...+75	62 500 / 25 000	125 000	4	/2
8314 H	80	47,1	**24**	12...28	48	6,2	■	6,0	5 000	-20...+75	55 000 / 22 500	100 000	5	/2/19
8318	54	31,8	**48**	36...56	36	5,2	■	2,6	3 300	-20...+75	70 000 / 27 500	140 000	3	/2/17
8318 HL	67	39,4	**48**	36...56	43	5,8	■	4,3	4 200	-20...+75	62 500 / 25 000	125 000	4	
8318 H	80	47,1	**48**	36...56	48	6,2	■	5,8	5 000	-20...+65	55 000 / 30 000	100 000	5	/17

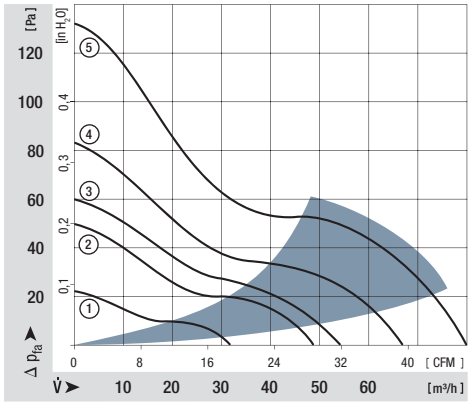

Rotor protrusion max. 0,4 mm.

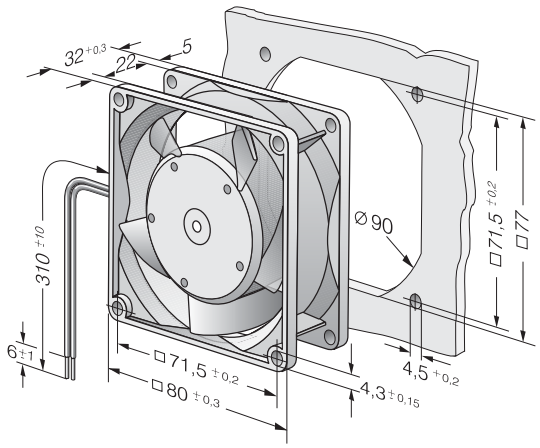

NG PWM A HP IP54 SP

ebmpapst

max. 222 m^3/h

DC axial fans

Series 8200 J 80 x 80 x 38 mm

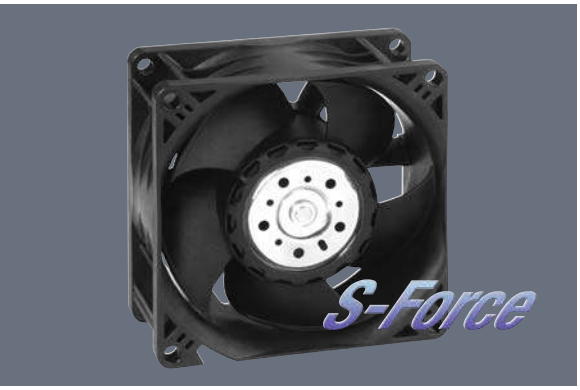

Highlights:

- Very rigid compression curve for high air flow at high back pressure.
- Innovative impeller with winglets for low noise.
- Optional Vario-Pro: Highly adaptable software configuration of the fan enables a tailor-made solution to the specific requirements of your applications.

General characteristics:

- Material: fibreglass-reinforced plastic. Impeller PA, housing PBT.
- Fully integrated electronic commutation. Protected against reverse polarity and locking.
- Connection via single strands AWG 24 (H3 and H4: AWG 22), TR 64. Bared and tin-plated.
- Air exhaust over struts. Direction of rotation counter-clockwise, seen on rotor.
- Mass: 160 g (H3 and H4: 200 g).

Nominal data	Air flow	Air flow	Nominal voltage	Voltage range	Sound pressure level	Sound power level	Sintec sleeve bearings / Ball bearings	Power input	Nominal speed	Temperature range	Service life L_{10} (40 °C) ebm-papst Standard / Service life L_{10} (T_{max}) ebm-papst Standard	Life expectancy $L_{10\Delta}$ (40 °C) see P. 15	Curve	Specials
Type	**m^3/h**	**CFM**	**VDC**	**VDC**	**dB(A)**	**Bel(A)**	□ / ■	**Watts**	**RPM**	**°C**	**Hours**	**Hours**	**P. 110**	
8212 JN	132	77,7	**12**	7...13,8	55	6,6	■	10	8400	-20...+70	62 500 / 32 500	130 000	1	/2
8212 JH3 *S-Force*	190	111,8	**12**	6...13,8	66	7,3	■	25	12 000	-20...+70	55 000 / 27 500	110 000	2	/2
8212 JH4 *S-Force*	222	130,7	**12**	6...13,8	71	7,8	■	39	14 000	-20...+70	50 000 / 25 000	100 000	3	/2
8214 JN	132	77,7	**24**	18...26,4	55	6,6	■	10	8400	-20...+70	62 500 / 32 500	130 000	1	/2
8214 JH3 *S-Force*	190	111,8	**24**	12...27,6	66	7,3	■	25	12 000	-20...+70	55 000 / 27 500	110 000	2	/2
8214 JH4 *S-Force*	222	130,7	**24**	12...27,6	71	7,8	■	38	14 000	-20...+70	50 000 / 25 000	100 000	3	/2
8218 JN	132	77,7	**48**	36...53	55	6,6	■	11	8400	-20...+70	62 500 / 32 500	130 000	1	/2
8218 JH3 *S-Force*	190	111,8	**48**	20...58	66	7,3	■	25	12 000	-20...+70	55 000 / 27 500	110 000	2	/2
8218 JH4 *S-Force*	222	130,7	**48**	20...58	71	7,8	■	36	14 000	-20...+70	50 000 / 25 000	100 000	3	/2

8200 JH3 and JH4 also as standard with PWM control input and speed signal.
Speed control range from 2000 RPM up to maximum nominal speed. Stationary at 0 % PWM, maximum speed at sensor break.

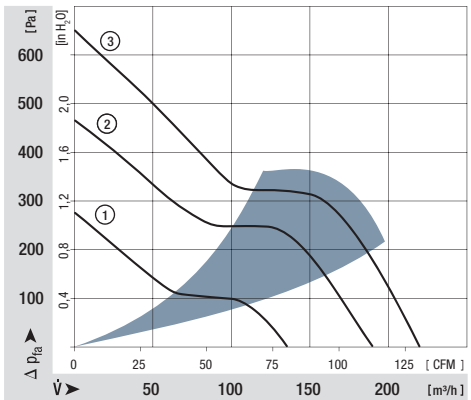

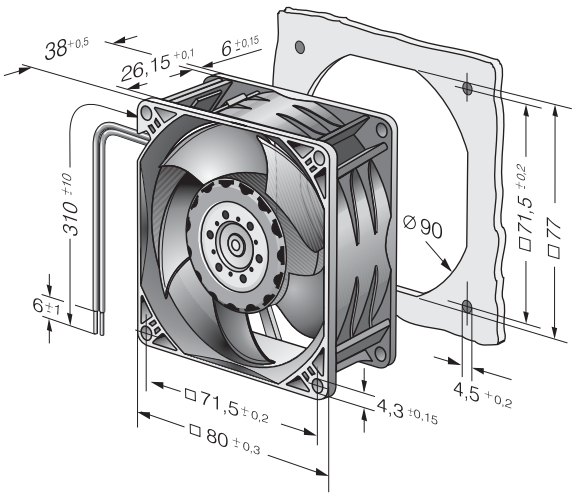

max. 102 m^3/h

DC axial fans

Series 3400 N 92 x 92 x 25 mm



Highlights:

- Ball bearings and sleeve bearings available.
- Some models suitable for use at high ambient temperatures up to 85 °C.

General characteristics:

- Material: fibreglass-reinforced plastic. Impeller PA, housing PBT.
- Fully integrated electronic commutation.
- Protected against reverse polarity and locking.
- Connection via single strands AWG 24, TR 64. Bared and tin-plated.
- Air exhaust over struts. Direction of rotation counter-clockwise, seen on rotor.
- Mass: 100 g.

Nominal data	Air flow	Air flow	Nominal voltage	Voltage range	Sound pressure level	Sound power level	Sintec sleeve bearings / Ball bearings	Power input	Nominal speed	Temperature range	Service life L_{10} (40 °C) ebm-papst Standard	Service life L_{10} (T_{max}) ebm-papst Standard	Life expectancy $L_{10\Delta}$ (40 °C) see P. 15	Curve	Specials
Type	m^3/h	CFM	VDC	VDC	dB(A)	Bel(A)	□ / ■	Watts	RPM	°C	Hours		Hours	P. 110/118	
3412 NGLE	61	35,9	**12**	8...15	23	4,0	□	1,1	1 950	-20...+80	80 000 / 30 000		160 000	1	
3412 NLE	61	35,9	**12**	8...15	23	4,0	■	0,8	1 950	-20...+85	80 000 / 27 500		160 000	1	
3412 NGME	72	42,4	**12**	8...15	28	4,3	□	1,6	2 300	-20...+75	75 000 / 32 500		150 000	2	
3412 NME	72	42,4	**12**	8...15	28	4,3	■	1,1	2 300	-20...+75	75 000 / 32 500		150 000	2	/2
3412 NG	84	49,4	**12**	8...15	32	4,7	□	2,2	2 700	-20...+70	70 000 / 35 000		140 000	3	/2
3412 N	84	49,4	**12**	8...15	32	4,7	■	2,2	2 700	-20...+70	70 000 / 35 000		140 000	3	/2
3412 NGH	94	55,3	**12**	8...15	36	5,0	□	2,5	3 000	-20...+70	70 000 / 35 000		140 000	4	
3412 NH	94	55,3	**12**	8...15	36	5,0	■	2,5	3 000	-20...+70	70 000 / 35 000		140 000	4	/39
3412 NGHH	102	60,0	**12**	8...13,2	39	5,1	□	3,2	3 250	-20...+60	70 000 / 45 000		150 000	5	/2
3412 NHH	102	60,0	**12**	8...13,2	39	5,1	■	2,9	3 250	-20...+60	70 000 / 45 000		150 000	5	/2
3412 NHH-379	102	60,0	**12**	8...15	39	5,1	■	2,7	3 250	-20...+70	70 000 / 35 000		140 000	5	
3414 NGL	61	35,9	**24**	18...28	23	4,0	□	1,4	1 950	-20...+70	80 000 / 40 000		160 000	1	
3414 NL	61	35,9	**24**	18...28	23	4,0	■	1,4	1 950	-20...+70	80 000 / 40 000		160 000	1	
3414 NGM	72	42,4	**24**	18...28	28	4,3	□	1,8	2 300	-20...+70	75 000 / 37 500		150 000	2	
3414 NM	72	42,4	**24**	18...28	28	4,3	■	1,8	2 300	-20...+70	75 000 / 37 500		150 000	2	
3414 NG	84	49,4	**24**	18...28	32	4,7	□	2,3	2 700	-20...+70	70 000 / 35 000		140 000	3	
3414 N	84	49,4	**24**	18...28	32	4,7	■	2,3	2 700	-20...+70	70 000 / 35 000		140 000	3	/2
3414 NGH	94	55,3	**24**	18...26	36	5,0	□	3,0	3 000	-20...+70	70 000 / 35 000		140 000	4	/2
3414 NH	94	55,3	**24**	18...26	36	5,0	■	3,0	3 000	-20...+70	70 000 / 35 000		140 000	4	
3414 NGHH	102	60,0	**24**	18...26	39	5,1	□	3,2	3 250	-20...+70	70 000 / 35 000		140 000	5	/2
3414 NGHH-389	102	60,0	**24**	18...28	39	5,1	□	3,2	3 250	-20...+70	70 000 / 35 000		140 000	5	
3414 NHH	102	60,0	**24**	18...26	39	5,1	■	2,7	3 250	-20...+70	70 000 / 35 000		140 000	5	/39
3414 NHH-386	102	60,0	**24**	18...28	39	5,1	■	2,7	3 250	-20...+70	70 000 / 35 000		140 000	5	
3418 N	84	49,4	**48**	36...56	32	4,7	■	2,4	2 700	-20...+70	70 000 / 35 000		140 000	3	

Other 48 VDC models on request.

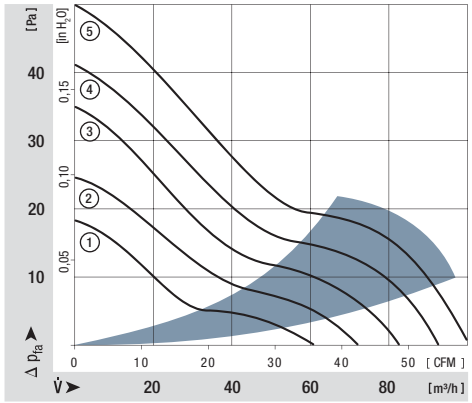

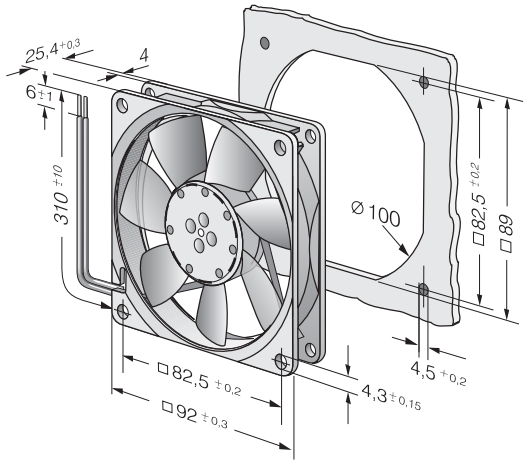

NG PWM IP54

ebmpapst

max. 84 m^3/h

DC axial fans

Series 3400 N VARIOFAN 92 x 92 x 25 mm

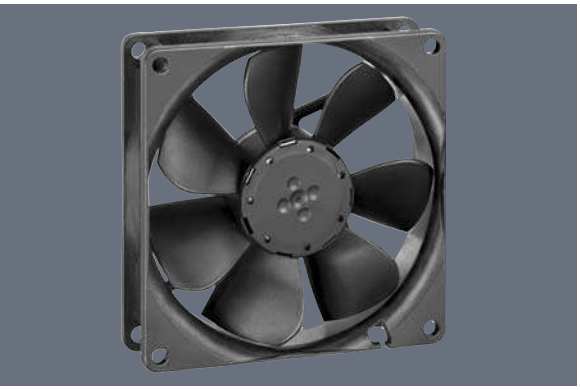

Highlights:
- Open loop speed control by means of external or internal temperature sensor.
- Automatic speed adjustment according to cooling requirements.

General characteristics:
- Material: fibreglass-reinforced plastic. Impeller PA, housing PBT.
- Fully integrated electronic commutation.
- Protected against reverse polarity and locking.
- Connection via single strands AWG 24, TR 64. Bared and tin-plated.
- Air exhaust over struts. Direction of rotation counter-clockwise, seen on rotor.
- Mass: 100 g.

Nominal data		Air flow	Air flow	Nominal voltage	Voltage range	Sound pressure level	Sound power level	Sintec sleeve bearings / Ball bearings	Power input	Nominal speed	Temperature range	Service life L_{10} (40 °C) ebm-papst Standard	Service life L_{10} (T_{max}) ebm-papst Standard	Life expectancy $L_{10\Delta}$ (40 °C) see P. 15	Curve	Specials
Type		m^3/h	CFM	VDC	VDC	dB(A)	Bel(A)	□ / ■	Watts	RPM	°C	Hours		Hours	P. 117	
30°C	3412 NGMV	44	25,9	12	8...14	14	3,5	□	1,5	1 400	-20...+70	75 000 / 37 500		142 500	1	
50°C		72	42,4			28	4,3		2,0	2 300					2	
30°C	3412 NGV	50	29,4	12	8...12,6	16	3,7	□	1,6	1 600	-20...+70	75 000 / 37 500		142 500	3	/37
50°C		84	49,4			32	4,7		2,5	2 700					4	

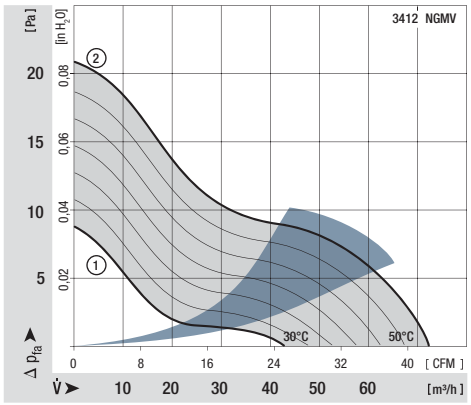

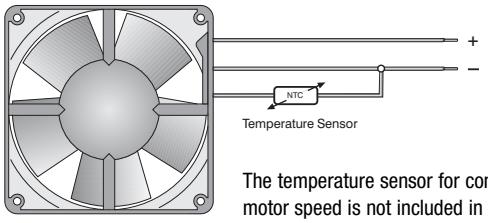

The temperature sensor for controlling the motor speed is not included in delivery.
Temperature sensor LZ 370 see accessories.

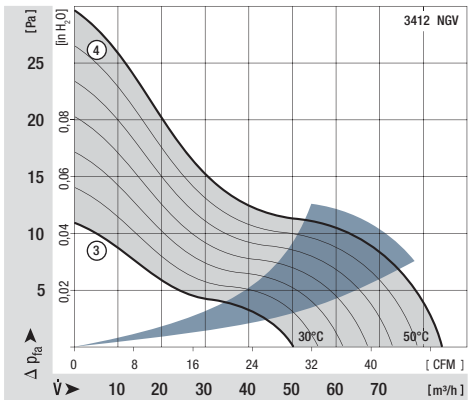

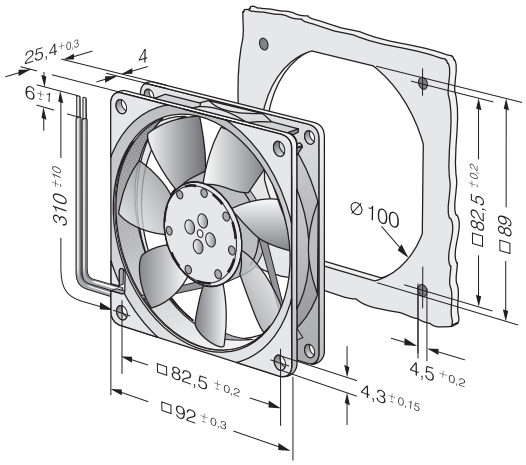

max. 107 m^3/h

DC axial fans

Series 3300 92 x 92 x 32 mm

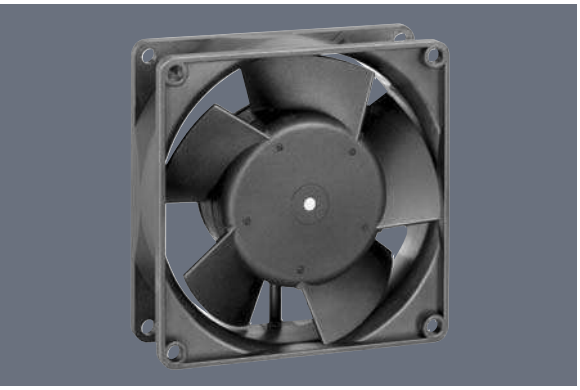

Highlights:

- Ball bearings and sleeve bearings available.
- Optional Vario-Pro: Highly adaptable software configuration of the fan enables a tailor-made solution to the specific requirements of your applications.

General characteristics:

- Material: fibreglass-reinforced plastic. Impeller PA, housing PBT.
- Fully integrated electronic commutation.
- Protected against reverse polarity and locking.
- Connection via single strands AWG 22, TR 64. Bared and tin-plated.
- Air exhaust over struts. Direction of rotation clockwise, seen on rotor.
- Mass: 190 g.

Nominal data	Air flow	Air flow	Nominal voltage	Voltage range	Sound pressure level	Sound power level	Sintec sleeve bearings / Ball bearings	Power input	Nominal speed	Temperature range	Service life L_{10} (40 °C) ebm-papst Standard	Service life L_{10} (T_{max}) ebm-papst Standard	Life expectancy $L_{10}\Delta$ (40 °C) see P. 15	Curve	Specials
Type	m^3/h	CFM	VDC	VDC	dB(A)	Bel(A)	□ / ■	Watts	RPM	°C	Hours		Hours	P. 110-114	
3312 L	56	33,0	**12**	6...15	29	4,5	■	1,4	2 150	-20...+75	80 000 / 35 000		147 500	1	
3312 GM	68	40,0	**12**	6...15	34	4,8	▨	1,7	2 600	-20...+75	70 000 / 30 000		135 000	2	
3312 M	68	40,0	**12**	6...15	34	4,8	■	1,7	2 600	-20...+75	70 000 / 30 000		135 000	2	
3312	80	47,1	**12**	6...15	37	5,2	■	2,4	3 000	-20...+75	70 000 / 30 000		135 000	3	/2
3312-177	93	54,7	**12**	6...15	43	5,7	■	3,5	3 500	-20...+75	65 000 / 27 500		122 500	5	
3314 G	80	47,1	**24**	12...28	37	5,2	▨	2,6	3 000	-20...+75	70 000 / 30 000		135 000	3	
3314	80	47,1	**24**	12...28	37	5,2	■	2,6	3 000	-20...+75	70 000 / 30 000		135 000	3	/17
3314-140	85	50,0	**24**	12...28	40	5,4	■	3,0	3 200	-20...+75	70 000 / 30 000		135 000	4	
3314 H	107	63,0	**24**	12...28	47	6,0	■	5,3	4 000	-20...+75	57 500 / 25 000		112 500	6	/2
3318	80	47,1	**48**	36...56	37	5,2	■	2,7	3 000	-20...+75	70 000 / 30 000		135 000	3	/2
3318 H	107	63,0	**48**	36...56	47	6,0	■	4,3	4 000	-20...+60	57 500 / 35 000		112 500	6	/2/17

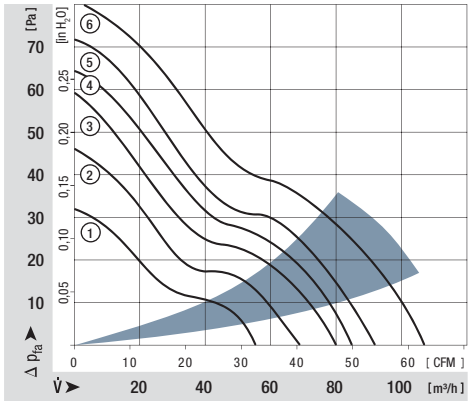

Rotor protrusion max. 0,4 mm.

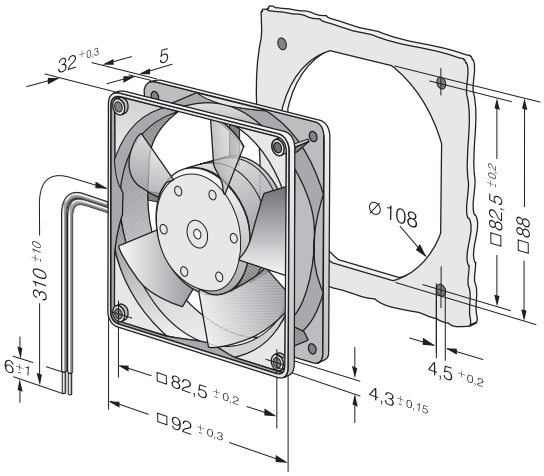

NG IT II PWM A HP IP54 SP

ebmpapst

max. 280 m^3/h

DC axial fans

Series 3200 J 92 x 92 x 38 mm



Highlights:

- Very rigid compression curve for high air flow at high back pressure.
- Innovative impeller with winglets for low noise.
- Optional Vario-Pro: Highly adaptable software configuration of the fan enables a tailor-made solution to the specific requirements of your applications.

General characteristics:

- Material: fibreglass-reinforced plastic. Impeller PA, housing PBT.
- Fully integrated electronic commutation. Protected against reverse polarity and locking.
- Connection via single strands AWG 24 (H3 and H4: AWG 22), TR 64. Bared and tin-plated.
- Air exhaust over struts. Direction of rotation clockwise, seen on rotor.
- Mass: 240 g (H3 and H4: 280 g).

Nominal data	Air flow	Air flow	Nominal voltage	Voltage range	Sound pressure level	Sound power level	Sintec sleeve bearings / Ball bearings	Power input	Nominal speed	Temperature range	Service life L_{10} (40 °C) ebm-papst Standard	Service life L_{10} (T_{max}) ebm-papst Standard	Life expectancy $L_{10\Delta}$ (40 °C) see P. 15	Curve	Specials
Type	m^3/h	CFM	VDC	VDC	dB(A)	Bel(A)	□ / ■	Watts	RPM	°C	Hours		Hours	P. 110	
3212 JN	130	76,5	**12**	7...13,8	51	6,1	■	7,5	6 000	-20 ...+70	70 000 / 35 000		140 000	1	/2
3212 JH	146	86,0	**12**	7...15	55	6,4	■	9,0	6 800	-20 ...+70	70 000 / 35 000		140 000	2	/2
3212 JH3 S-Force	237	139,5	**12**	6...13,8	69	7,8	■	30,0	11 000	-20 ...+70	65 000 / 32 500		130 000	3	/2
3212 JH4 S-Force	280	164,8	**12**	6...13,8	73	8,2	■	50,0	13 000	-20 ...+70	60 000 / 30 000		120 000	4	/2
3214 JN	130	76,5	**24**	11...28	51	6,1	■	8,0	6 000	-20 ...+70	70 000 / 35 000		140 000	1	
3214 JH	146	86,0	**24**	11...30	55	6,4	■	9,0	6 800	-20 ...+70	70 000 / 35 000		140 000	2	/2
3214 JH3 S-Force	237	139,5	**24**	12...27,6	69	7,8	■	30,0	11 000	-20 ...+70	65 000 / 32 500		130 000	3	/2
3214 JH4 S-Force	280	164,8	**24**	12...27,6	73	8,2	■	50,0	13 000	-20 ...+70	60 000 / 30 000		120 000	4	
3218 JN	130	76,5	**48**	36...56	51	6,1	■	7,0	6 000	-20 ...+70	70 000 / 35 000		140 000	1	
3218 JH	146	86,0	**48**	36...53	55	6,4	■	9,5	6 800	-20 ...+70	70 000 / 35 000		140 000	2	
3218 JH3 S-Force	237	139,5	**48**	20...58,0	69	7,8	■	30,0	11 000	-20 ...+70	65 000 / 32 500		130 000	3	/2
3218 JH4 S-Force	280	164,8	**48**	20...58,0	73	8,2	■	50,0	13 000	-20 ...+70	60 000 / 30 000		120 000	4	

3200 JH3 and JH4 also as standard with PWM control input and speed signal.
Speed control range from 2000 RPM up to maximum nominal speed. Stationary at 0 % PWM, maximum speed at sensor break.

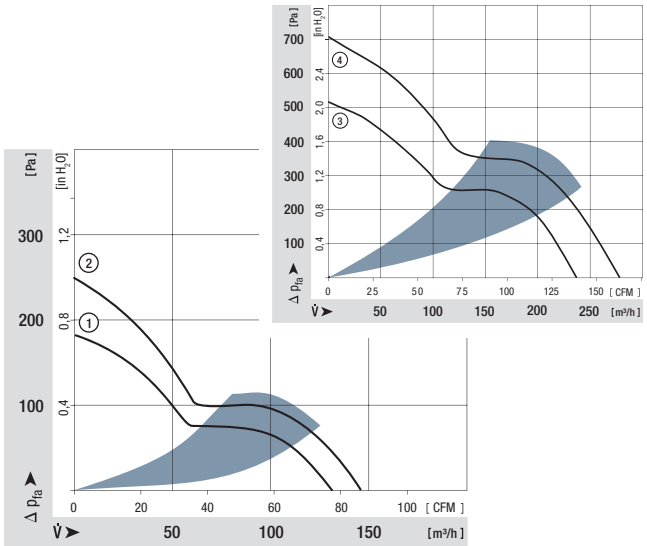

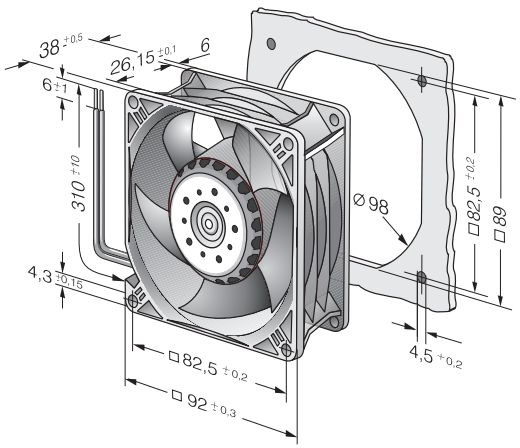

max. 170 m^3/h

DC axial fans

Series 4400 F 119 x 119 x 25 mm



Highlights:

- Ball bearings and sleeve bearings available.
- Open loop speed control available on request.
- Alarm and speed signals available on request.

General characteristics:

- Material: fibreglass-reinforced plastic. Impeller PA, housing PBT.
- Fully integrated electronic commutation.
- Protected against reverse polarity and locking.
- Connection via single strands AWG 24, TR 64. Bared and tin-plated.
- Air exhaust over struts. Direction of rotation counter-clockwise, seen on rotor.
- Mass: 175 g.

Nominal data	Air flow	Air flow	Nominal voltage	Voltage range	Sound pressure level	Sound power level	Sintec sleeve bearings □ / Ball bearings ■	Power input	Nominal speed	Temperature range	Service life L_{10} (40 °C) ebm-papst Standard	Service life L_{10} (T_{max}) ebm-papst Standard	Life expectancy $L_{10\Delta}$ (40 °C) see P. 15	Curve	Specials
Type	m^3/h	CFM	VDC	VDC	dB(A)	Bel(A)	□ / ■	Watts	RPM	°C	Hours		Hours	P. 110-118	
4412 FGL	94	55,3	**12**	7...14	26	3,9	□	1,3	1 600	-20...+75	80 000 / 35 000		157 500	1	/2/39
4412 FGML	114	67,1	**12**	7...12,6	32	4,3	□	2,0	1 950	-20...+75	75 000 / 32 500		145 000	2	/2
4412 FML	114	67,1	**12**	7...12,6	32	4,3	■	2,0	1 950	-20...+75	75 000 / 32 500		145 000	2	
4412 FGM	140	82,4	**12**	7...12,6	38	4,8	□	3,2	2 400	-20...+75	70 000 / 30 000		135 000	3	/12/39
4412 FM	140	82,4	**12**	7...12,6	38	4,8	■	3,2	2 400	-20...+75	70 000 / 30 000		135 000	3	/2
4412 FG	170	100,1	**12**	8...12,6	43	5,3	□	5,3	2 900	-20...+60	60 000 / 37 500		120 000	4	
4412 F	170	100,1	**12**	8...12,6	43	5,3	■	5,3	2 900	-20...+60	60 000 / 37 500		120 000	4	/2
4414 FL	94	55,3	**24**	18...28	26	3,9	■	1,0	1 600	-20...+75	80 000 / 35 000		157 500	1	/2
4414 FM	140	82,4	**24**	12...28	38	4,8	■	3,2	2 400	-20...+75	70 000 / 30 000		135 000	3	/2
4414 FG	170	100,1	**24**	12...28	43	5,3	□	5,0	2 900	-20...+60	60 000 / 37 500		120 000	4	/2
4414 F	170	100,1	**24**	12...28	43	5,3	■	5,0	2 900	-20...+60	60 000 / 37 500		120 000	4	/2/39
4418 FG	170	100,1	**48**	28...53	43	5,3	□	5,5	2 900	-20...+60	60 000 / 37 500		120 000	4	
4418 F	170	100,1	**48**	28...53	43	5,3	■	5,5	2 900	-20...+60	60 000 / 37 500		120 000	4	/2/12

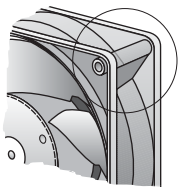

Available on request:
Fan housing with moulded-in spacers. For mounting over both flanges.

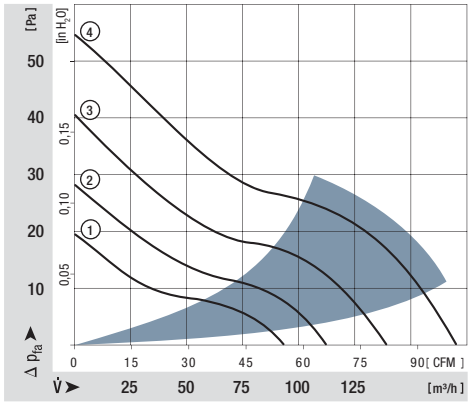

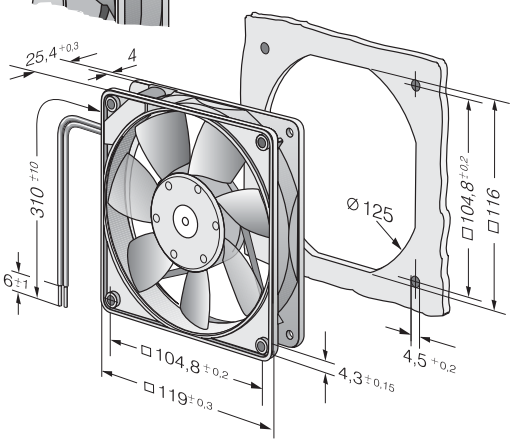

ebmpapst

max. 225 m^3/h

DC axial fans

Series 4400 FN 119 x 119 x 25 mm

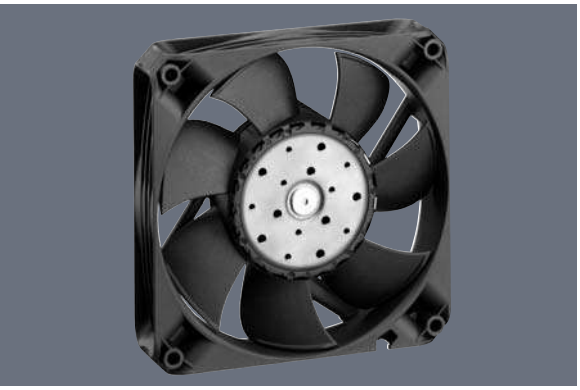

Highlights:

- Very rigid compression curve for high air flow at high back pressure.
- Innovative impeller with winglets for low noise.
- Optional Vario-Pro: Highly adaptable software configuration of the fan enables a tailor-made solution to the specific requirements of your applications.

General characteristics:

- Material: fibreglass-reinforced plastic. Impeller PA, housing PBT.
- Fully integrated electronic commutation.
- Protected against reverse polarity and locking.
- Connection via single strands AWG 22, TR 64. Bared and tin-plated.
- Air exhaust over struts. Direction of rotation counter-clockwise, seen on rotor.
- Mass: 240 g.

Nominal data	Air flow	Air flow	Nominal voltage	Voltage range	Sound pressure level	Sound power level	Sintec sleeve bearings / Ball bearings	Power input	Nominal speed	Temperature range	Service life L_{10} (40 °C) ebm-papst Standard	Service life L_{10} (T_{max}) ebm-papst Standard	Life expectancy $L_{10\Delta}$ (40 °C) see P. 15	Curve	Specials
Type	m^3/h	CFM	VDC	VDC	dB(A)	Bel(A)	□ / ■	Watts	RPM	°C	Hours		Hours	P. 110/118	
4412 FNH	225	132,4	**12**	7...13,2	55	6,7	■	12	5 400	-20...+70	60 000 / 30 000		120 000	2	/2
4414 FNN	200	117,7	**24**	14...28	52	6,5	■	8,5	4 850	-20...+70	60 000 / 30 000		120 000	1	/2
4414 FNH	225	132,4	**24**	18...26,4	55	6,7	■	12	5 400	-20...+70	60 000 / 30 000		120 000	2	/39
4418 FNH	225	132,4	**48**	36...53	55	6,7	■	12	5 400	-20...+70	60 000 / 30 000		120 000	2	

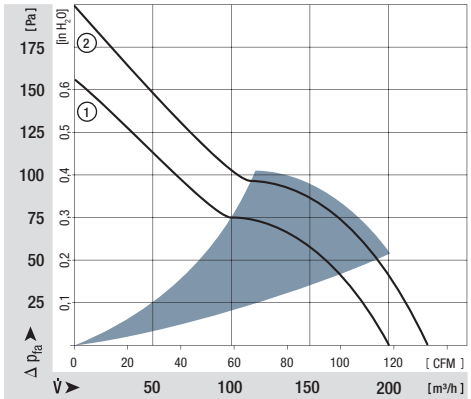

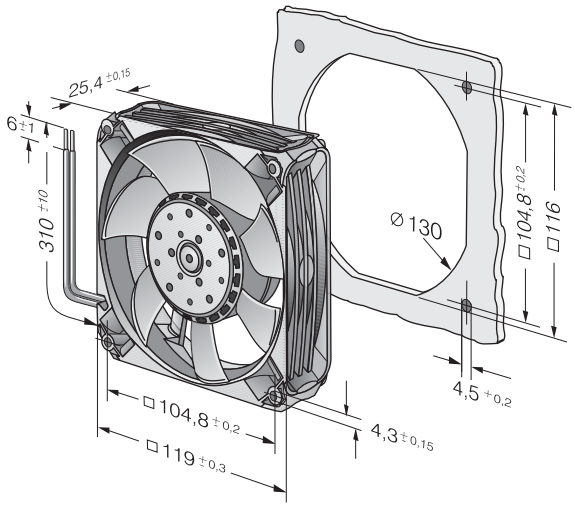

max. 204 m^3/h

DC axial fans

Series 4300 119 x 119 x 32 mm

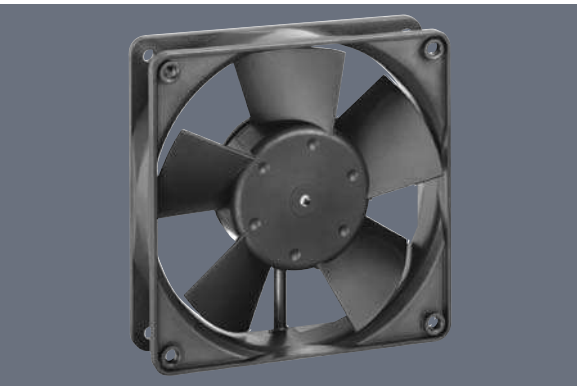

Highlights:

- Ball bearings and sleeve bearings available.
- Optional Vario-Pro: Highly adaptable software configuration of the fan enables a tailor-made solution to the specific requirements of your applications

General characteristics:

- Material: fibreglass-reinforced plastic. Impeller PA, housing PBT.
- Fully integrated electronic commutation.
- Protected against reverse polarity and locking.
- Connection via single strands AWG 22, TR 64. Bared and tin-plated.
- Air exhaust over struts. Direction of rotation clockwise, seen on rotor.
- Mass: 220 g.

Nominal data	Air flow	Air flow	Nominal voltage	Voltage range	Sound pressure level	Sound power level	Sintec sleeve bearings / Ball bearings	Power input	Nominal speed	Temperature range	Service life L_{10} (40 °C) ebm-papst Standard	Service life L_{10} (T_{max}) ebm-papst Standard	Life expectancy $L_{10\Delta}$ (40 °C) see P. 15	Curve	Specials
Type	m^3/h	CFM	VDC	VDC	dB(A)	Bel(A)	□ / ■	Watts	RPM	°C	Hours		Hours	P. 110-116	
4312 GL	95	55,9	**12**	6...15	30	4,3	□	1,2	1 550	-20...+75	80 000 / 35 000		157 500	1	
4312 L	95	55,9	**12**	6...15	30	4,3	■	1,2	1 550	-20...+75	80 000 / 35 000		157 500	1	
4312 GM	140	82,4	**12**	6...15	39	5,3	□	2,6	2 300	-20...+75	70 000 / 30 000		135 000	2	
4312 M	140	82,4	**12**	6...15	39	5,3	■	2,6	2 300	-20...+75	70 000 / 30 000		135 000	2	/12
4312 G	170	100,1	**12**	6...15	45	5,8	□	5,0	2 800	-20...+75	62 500 / 27 500		122 500	3	
4312	170	100,1	**12**	6...15	45	5,8	■	5,0	2 800	-20...+75	62 500 / 27 500		122 500	3	/2/19
4312-179	204	120,1	**12**	6...13,2	51	6,4	■	8,5	3 400	-20...+75	47 500 / 20 000		90 000	5	
4314 L	95	55,9	**24**	12...28	30	4,3	■	1,2	1 550	-20...+75	80 000 / 35 000		157 500	1	
4314 M	140	82,4	**24**	12...28	39	5,3	■	2,6	2 300	-20...+75	70 000 / 30 000		135 000	2	
4314 G	170	100,1	**24**	12...28	45	5,8	□	5,0	2 800	-20...+75	62 500 / 27 500		122 500	3	
4314	170	100,1	**24**	12...28	45	5,8	■	5,0	2 800	-20...+75	62 500 / 27 500		112 500	3	/2/12
4314-147	180	105,9	**24**	12...28	47	6,1	■	5,8	3 000	-20...+75	57 500 / 25 000		112 500	4	
4314-180	204	120,1	**24**	12...26,5	51	6,4	■	9,5	3 400	-20...+75	45 000 / 20 000		90 000	5	
4318 M	140	82,4	**48**	36...56	39	5,3	■	3,5	2 300	-20...+75	70 000 / 30 000		135 000	2	
4318	170	100,1	**48**	36...53	45	5,8	■	5,0	2 800	-20...+75	62 500 / 27 500		112 500	3	/2/17

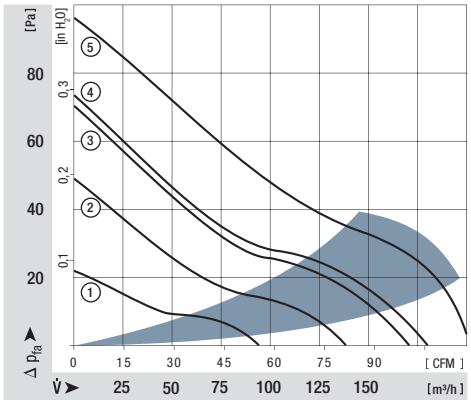

Rotor protrusion max. 0,4 mm.

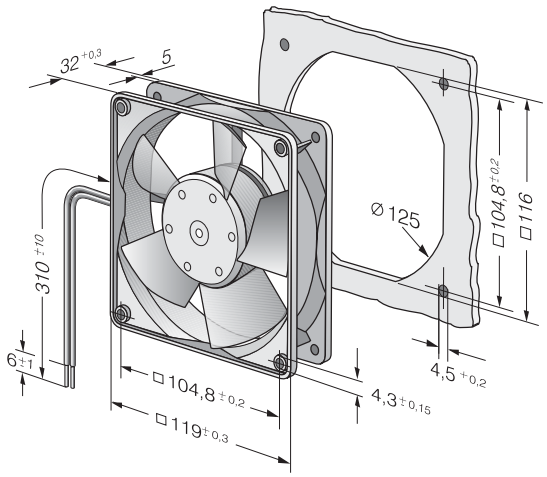

ebmpapst

max. 170 m^3/h

DC axial fans

Series 4300 119 x 119 x 32 mm

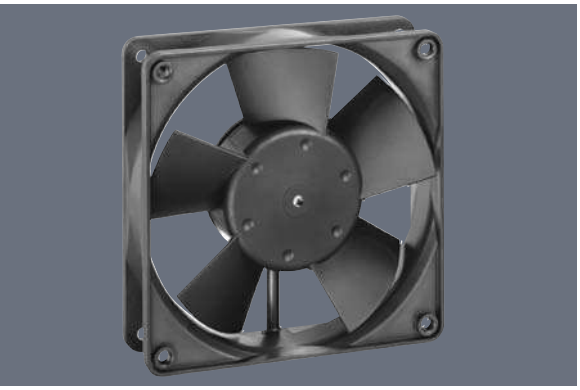

Highlights:

- Open loop speed control by means of external or internal temperature sensor.
- Automatic speed adjustment according to cooling requirements.

General characteristics:

- Material: fibreglass-reinforced plastic. Impeller PA, housing PBT.
- Fully integrated electronic commutation.
- Protected against reverse polarity and locking.
- Connection via single strands AWG 22, TR 64. Bared and tin-plated.
- Air exhaust over struts. Direction of rotation clockwise, seen on rotor.
- Mass: 220 g.

Nominal data	Type	Air flow	Air flow	Nominal voltage	Voltage range	Sound pressure level	Sound power level	Sintec sleeve bearings / Ball bearings	Power input	Nominal speed	Temperature range	Service life L_{10} (40 °C) ebm-papst Standard	Service life L_{10} (T_{max}) ebm-papst Standard	Life expectancy $L_{10\Delta}$ (40 °C) see P. 15	Curve	Specials
		m^3/h	CFM	VDC	VDC	dB(A)	Bel(A)	□ / ■	Watts	RPM	°C	Hours		Hours	P. 114	
25°C	4312 MT	65	38,2	**12**	8...15	25	3,9	■	1,1	1 100	-20...+65	70 000 / 40 000		142 500	1	/17
50°C		138	81,2			39	5,3		3,0	2 300					2	
25°C	4312 T	85	50,0	**12**	8...13,2	29	4,2	■	2,4	1 400	-20...+65	65 000 / 35 000		132 500	3	/17
50°C		170	100,1			45	5,8		5,5	2 800					4	
30°C	4314 T	85	50,0	**24**	18...32	29	4,2	■	1,6	1 400	-20...+65	65 000 / 35 000		132 500	3	/17
50°C		170	100,1			45	5,8		4,8	2 800					4	
25°C	4318 V	61	35,9	**48**	40...53	21	—	■	2,6	1 000	-20...+65	65 000 / 35 000		132 500	5	/17
50°C		170	100,0			45	5,8		5,4	2 800					6	

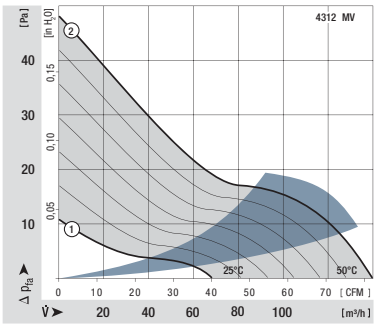

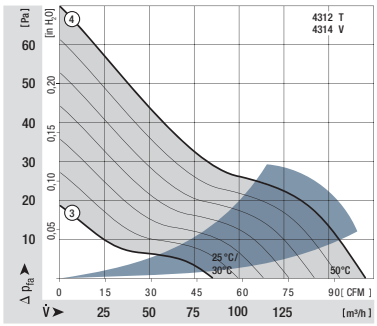

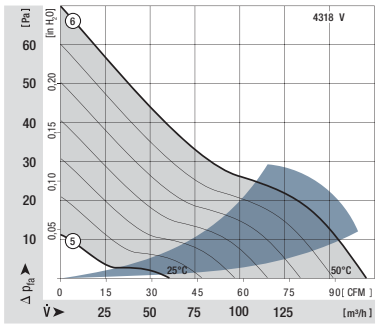

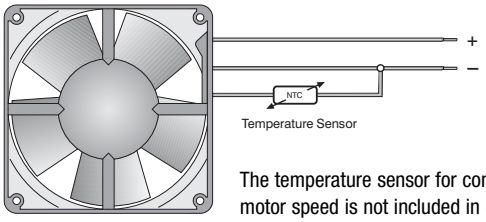

The temperature sensor for controlling the motor speed is not included in delivery.
Temperature sensor LZ 370 see accessories.

Rotor protrusion max. 0.4 mm.

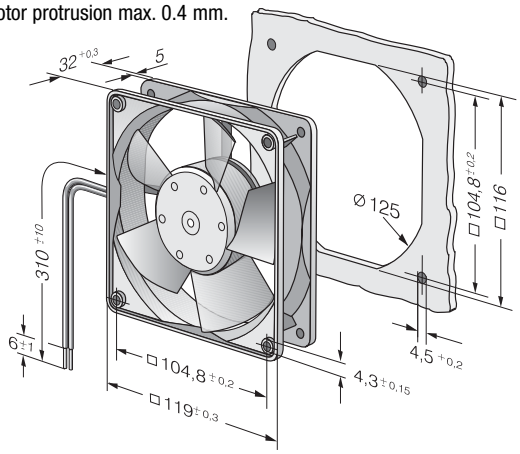

max. 285 m^3/h

DC axial fans

Series 4400 119 x 119 x 38 mm



Highlights:
- Innovative impeller with winglets for low noise.
- Control inputs, alarm and speed signals available on request.
- High-speed version with 5000 rpm, standard models available with /2 and PWM.

General characteristics:
- Material: fibreglass-reinforced plastic. Impeller PA, housing PBT.
- Fully integrated electronic commutation.
- Protected against reverse polarity and locking.
- Connection via single strands AWG 24, TR 64. Bared and tin-plated.
- Air exhaust over struts. Direction of rotation clockwise, seen on rotor.
- Mass: 270 g.

Nominal data	Air flow	Air flow	Nominal voltage	Voltage range	Sound pressure level	Sound power level	Sintec sleeve bearings / Ball bearings	Power input	Nominal speed	Temperature range	Service life L_{10} (40 °C) ebm-papst standard	Service life L_{10} (T_{max}) ebm-papst standard	Life expectancy $L_{10\Delta}$ (40 °C) see P. 15	Curve	Specials
Type	m^3/h	CFM	VDC	VDC	dB(A)	Bel(A)	□ / ■	Watts	RPM	°C	Hours		Hours	P. 110	
4412 L	150	88,3	**12**	7...14	37	5,0	■	2,5	2 700	-20...+70	67 500 / 35 000		140 000	1	
4412 M	184	108,3	**12**	7...14	42	5,3	■	4,2	3 300	-20...+70	65 000 / 32 500		130 000	2	
4412 N	205	120,7	**12**	7...14	46	5,6	■	5,5	3 650	-20...+70	62 500 / 30 000		120 000	3	/2
4412 H	240	141,3	**12**	7...14	50	6,0	■	8,9	4 300	-20...+70	57 500 / 27 500		110 000	4	/2
4412 /2 HHP	285	167,7	**12**	7...14,5	55	6,4	■	13,0	5 000	-20...+70	50 000 / 25 000		100 000	5	/2
4414 L	150	88,3	**24**	18...28	37	5,0	■	2,5	2 700	-20...+70	67 500 / 35 000		140 000	1	
4414 M	184	108,3	**24**	18...28	42	5,3	■	4,0	3 300	-20...+70	65 000 / 32 500		130 000	2	
4414 N	205	120,7	**24**	18...28	46	5,6	■	5,2	3 650	-20...+70	62 500 / 30 000		120 000	3	
4414 H	240	141,3	**24**	18...28	50	6,0	■	8,6	4 300	-20...+70	57 500 / 27 500		110 000	4	/2
4414 HH	285	164,8	**24**	16...28	55	6,4	■	14,0	5 000	-20...+70	50 000 / 25 000		100 000	5	
4414 /2 HHP	285	167,7	**24**	18...28	55	6,4	■	12,0	5 000	-20...+70	50 000 / 25 000		100 000	5	/2
4418 L	150	88,3	**48**	36...60	37	5,0	■	2,5	2 700	-20...+70	67 500 / 35 000		140 000	1	
4418 M	184	108,3	**48**	36...60	42	5,3	■	4,2	3 300	-20...+70	65 000 / 32 500		130 000	2	
4418 N	205	120,7	**48**	36...60	46	5,6	■	5,2	3 650	-20...+70	62 500 / 30 000		120 000	3	
4418 H	240	141,3	**48**	36...60	50	6,0	■	8,6	4 300	-20...+70	57 500 / 27 500		110 000	4	/2
4418 /2 HHP	285	167,7	**48**	36...60	55	6,4	■	13,5	5 000	-20...+70	50 000 / 25 000		100 000	5	/2

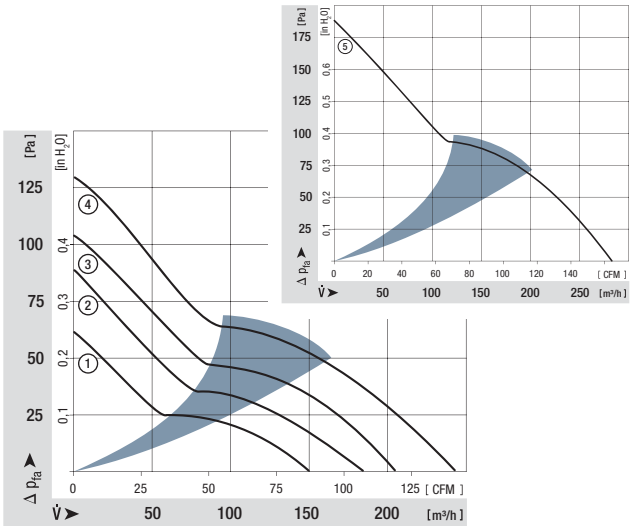

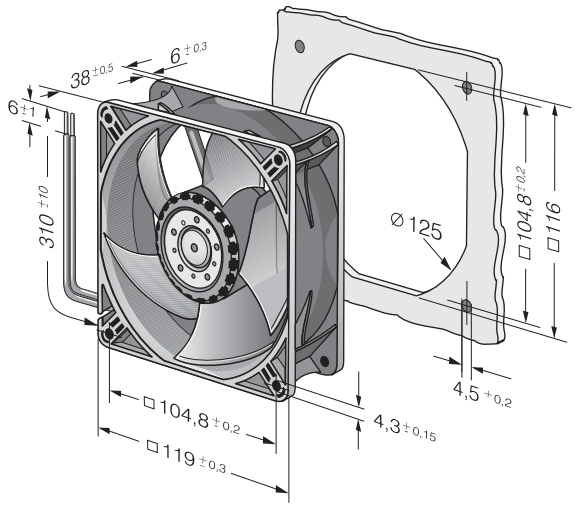

ebmpapst

max. 237 m^3/h

DC axial fans

Series 4100 N 119 x 119 x 38 mm

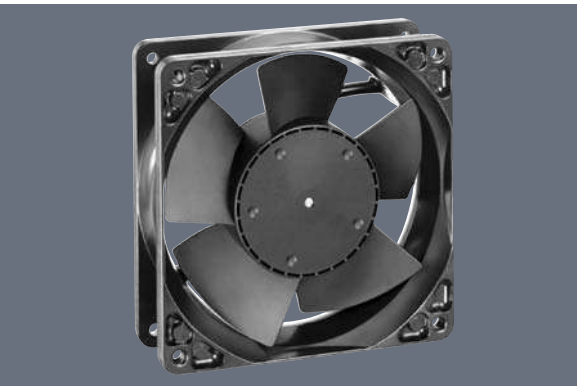

Highlights:

- Very rigid compression curve for high air flow at high back pressure.
- Low operating noise level at high back pressure.
- Optional Vario-Pro: Highly adaptable software configuration of the fan enables a tailor-made solution to the specific requirements of your applications.

General characteristics:

- Material: aluminium housing, fibreglass-reinforced PA impeller; housing with grounding lug for screw M4 x 8 (Torx).
- Fully integrated electronic commutation.
- Protected against reverse polarity and locking.
- Electrical connection with flat plugs, 2.8 x 0.5 mm. Optionally with strands.
- Air intake over struts. Direction of rotation clockwise, seen on rotor.
- Mass: 390 g.

Nominal data	Air flow	Air flow	Nominal voltage	Voltage range	Sound pressure level	Sound power level	Sintec sleeve bearings / Ball bearings	Power input	Nominal speed	Temperature range	Service life L_{10} (40 °C) ebm-papst Standard	Service life L_{10} (T_{max}) ebm-papst Standard	Life expectancy $L_{10\Delta}$ (40 °C) see P. 15	Curve	Specials
Type	m^3/h	CFM	VDC	VDC	dB(A)	Bel(A)	□ / ■	Watts	RPM	°C	Hours		Hours	P. 110-114	
4182 NGX	160	94,2	**12**	7...15	44	5,3	□	3,5	2 800	-10...+75	85 000 / 37 500		167 500	1	/2
4182 NX	180	105,9	**12**	7...15	49	5,7	■	4,5	3 200	-30...+75	85 000 / 37 500		167 500	2	/2/12
4182 NXH	237	139,5	**12**	7...14	57	6,5	■	11,0	4 400	-30...+55	70 000 / 50 000		142 500	3	
4184 NGX	160	94,2	**24**	12...30	44	5,3	□	3,5	2 800	-10...+75	85 000 / 37 500		167 500	1	/2
4184 NXM	160	94,2	**24**	12...30	44	5,3	■	3,5	2 800	-30...+75	85 000 / 37 500		167 500	1	
4184 NX	180	105,9	**24**	12...29	49	5,7	■	4,5	3 200	-30...+75	85 000 / 37 500		167 500	2	/2/17
4184 NXH	237	139,5	**24**	12...25	57	6,5	■	11,0	4 400	-30...+55	70 000 / 50 000		142 500	3	/2
4188 NGX	160	94,2	**48**	36...56	44	5,3	□	3,8	2 800	-10...+75	85 000 / 37 500		167 500	1	
4188 NXM	160	94,2	**48**	36...56	44	5,3	■	3,5	2 800	-30...+75	85 000 / 37 500		167 500	1	/12

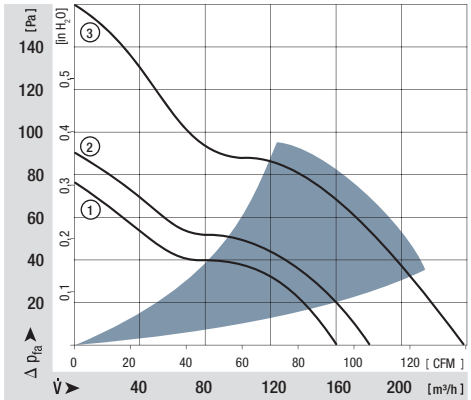

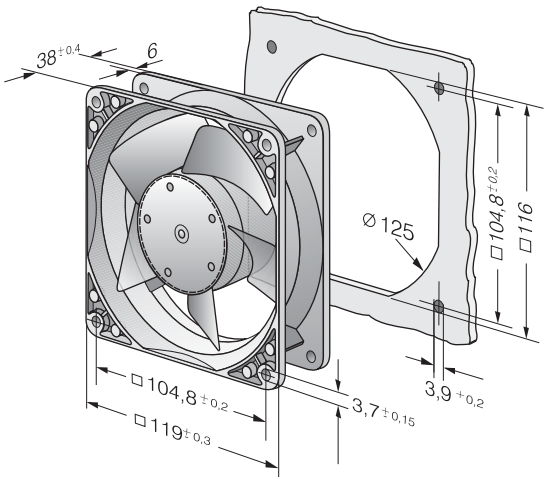

max. 440 m^3/h

DC axial fans

Series 4100 N High Performance 119 x 119 x 38 mm

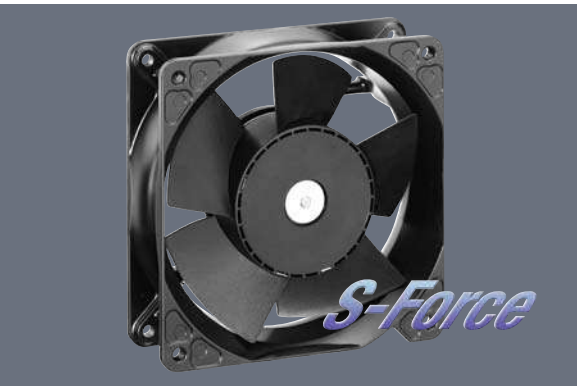

Highlights:

- Very rigid compression curve for high air flow at high back pressure.
- Low operating noise level at high back pressure.
- Optional Vario-Pro: Highly adaptable software configuration of the fan enables a tailor-made solution to the specific requirements of your applications.

General characteristics:

- Material: aluminium housing, fibreglass-reinforced PA impeller; housing with grounding lug for screw M4 x 8 (Torx).
- Fully integrated electronic commutation.
- Protected against reverse polarity and locking.
- Connection via single strands AWG 22, UL1007, TR 64, bared and tin-plated
- Air intake over struts. Direction of rotation clockwise, seen on rotor.
- Mass: 390 g.

Nominal data	Air flow	Air flow	Nominal voltage	Voltage range	Sound pressure level	Sound power level	Sintec sleeve bearings / Ball bearings	Power input	Nominal speed	Temperature range	Service life L_{10} (40 °C) ebm-papst Standard	Service life L_{10} (T_{max}) ebm-papst Standard	Life expectancy $L_{10\Delta}$ (40 °C) see P. 15	Curve	Specials
Type	m^3/h	CFM	VDC	VDC	dB(A)	Bel(A)	□ / ■	Watts	RPM	°C	Hours		Hours	P. 110	
4112 NHH	260	152,9	**12**	9...15	60	6,8	■	13,3	5 000	-20...+65	70 000 / 55 000		147 500	1	
4112 NH3	310	182,4	**12**	9...15	65	7,2	■	21,6	6 000	-20...+65	65 000 / 37 500		132 500	2	/2
4112 NH4	355	208,9	**12**	9...14	67	7,4	■	32,0	6 800	-20...+65	62 500 / 35 000		125 000	3	/2
4114 NHH	260	152,9	**24**	16...30	60	6,8	■	12,4	5 000	-20...+65	70 000 / 52 500		147 500	1	/2
4114 NH3	310	182,4	**24**	16...30	65	7,2	■	19,5	6 000	-20...+65	65 000 / 37 500		132 500	2	/2
4114 NH4	355	208,9	**24**	16...30	67	7,4	■	30,0	6 800	-20...+65	62 500 / 35 000		125 000	3	/2
4114 NH5	390	229,5	**24**	16...30	70	7,6	■	45,0	7 500	-20...+65	62 500 / 35 000		125 000	4	/2
4114 NH6	440	259,0	**24**	16...30	73	8,1	■	65,0	8 400	-20...+65	60 000 / 32 500		120 000	5	/2
4118 NHH	260	152,9	**48**	36...60	60	6,8	■	12,0	5 000	-20...+65	70 000 / 52 500		147 500	1	/2
4118 NH3	310	182,4	**48**	36...60	65	7,2	■	20,0	6 000	-20...+65	65 000 / 37 500		132 500	2	/2
4118 NH4	355	208,9	**48**	36...60	67	7,4	■	28,0	6 800	-20...+65	62 500 / 35 000		125 000	3	/2
4118 NH5	390	229,5	**48**	36...60	70	7,6	■	45,0	7 500	-20...+65	62 500 / 35 000		125 000	4	/2
4118 NH6	440	259,0	**48**	36...60	73	8,1	■	62,0	8 400	-20...+65	60 000 / 32 500		120 000	5	/2

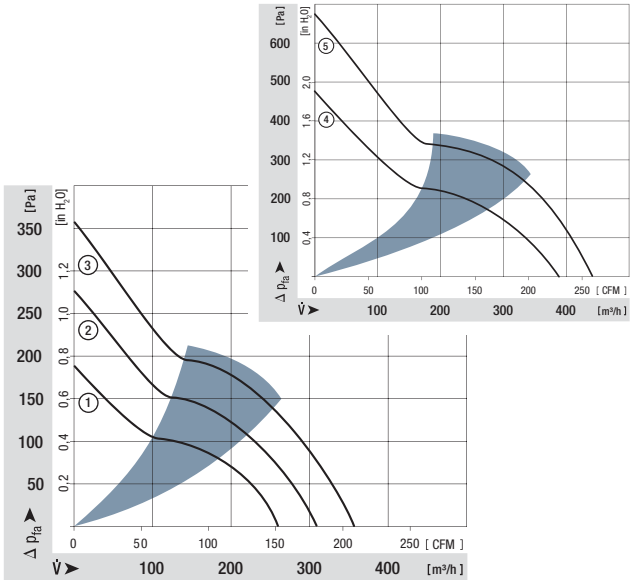

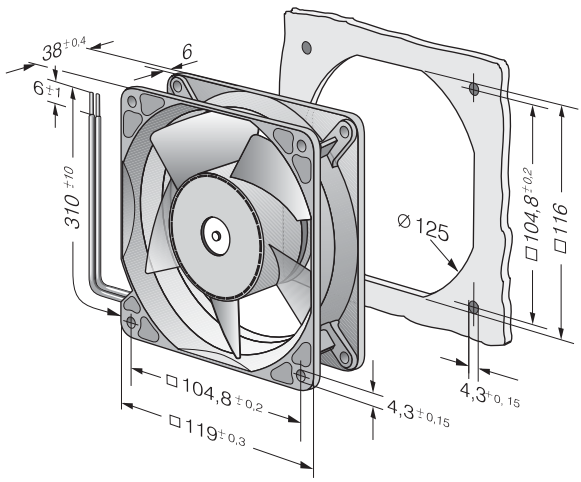

ebmpapst

max. 570 m^3/h

DC axial fans

Series 4100 N High Performance 119 x 119 x 38 mm



Highlights:

- Very rigid compression curve for high air flow at high back pressure.
- Low operating noise level at high back pressure.
- Available as standard with PWM control input and speed signal, additional inputs and outputs on request. 3-phase fan drive with high degree of running smoothness.

General characteristics:

- Material: aluminium housing, fibreglass-reinforced PA impeller; housing with grounding lug for screw M4 x 8 (Torx).
- Protected against reverse polarity and locking.
- Connection via single strands AWG 20, sensor and control leads AWG 22, UL1007, TR 64. Bared and tin-plated.
- Air intake over struts. Direction of rotation clockwise, seen on rotor.
- Mass: 425 g.

Nominal data	Air flow	Air flow	Nominal voltage	Voltage range	Sound pressure level	Sound power level	Sintec sleeve bearings / Ball bearings	Power input	Nominal speed	Temperature range	Service life L_{10} (40 °C) ebm-papst Standard	Service life L_{10} (T_{max}) ebm-papst Standard	Life expectancy $L_{10}\Delta$ (40 °C) see P. 15	Curve	Specials
Type	m^3/h	CFM	VDC	VDC	dB(A)	Bel(A)	□ / ■	Watts	RPM	°C	Hours		Hours	P. 110	
4114 N/2H7P	500	294,2	**24**	16...30	76	8,5	■	90	9 500	-20...+75	57 500 / 25 000		115 000	1	/2
4114 N/2H8P	570	335,5	**24**	16...30	78	8,9	■	120	11 000	-20...+75	55 000 / 22 500		110 000	2	/2
4118 N/2H7P	500	294,2	**48**	36...60*	76	8,5	■	90	9 500	-20...+75	57 500 / 25 000		115 000	1	/2
4118 N/2H8P	570	335,5	**48**	36...60*	78	8,9	■	120	11 000	-20...+75	55 000 / 22 500		110 000	2	/2

*36...72 VDC on request.

Speed control range from 500 RPM up to maximum nominal speed. Stationary at 0 % PWM, maximum speed at sensor break.
To attain the specified service life, an external capacitor must be wired between the plus and minus strands.
Please note the wiring suggestion on page 22.

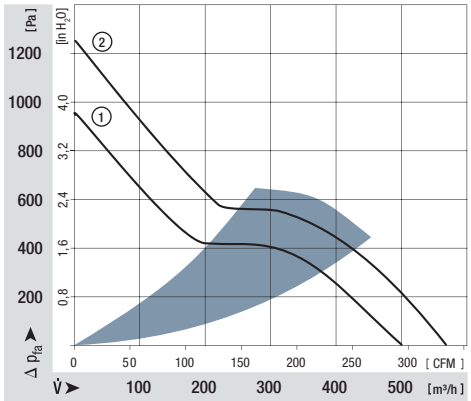

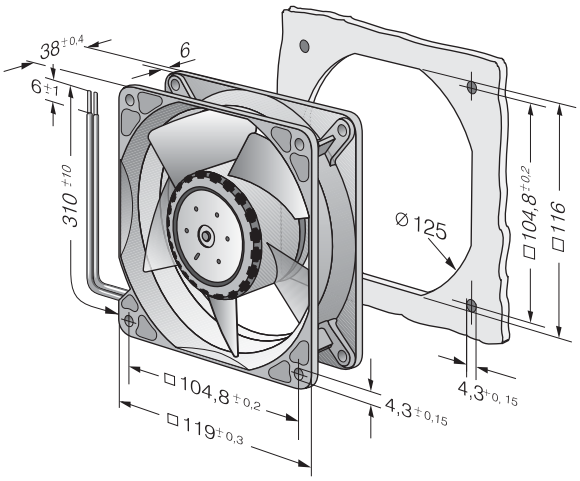

max. 275 m^3/h

DC diagonal fans

Series DV 4100 119 x 119 x 38 mm

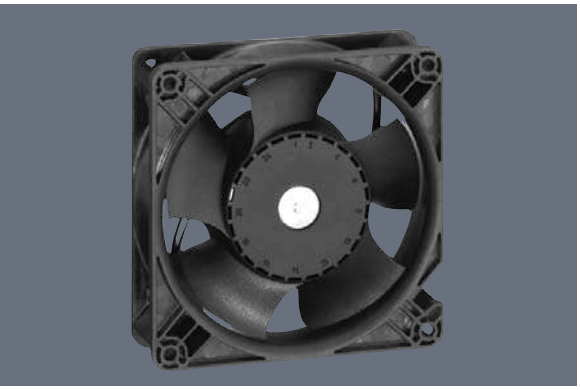

Highlights:

- Diagonal compact fan with low noise and high pressure saddle.
- Very rigid compression curve for high air flow at high back pressure.
- Optional Vario-Pro: Highly adaptable software configuration of the fan enables a tailor-made solution to the specific requirements of your applications.

General characteristics:

- Material: aluminium housing, fibreglass-reinforced PA impeller; housing with grounding lug for screw M4 x 8 (Torx).
- Fully integrated electronic commutation.
- Protected against reverse polarity and locking.
- Connection via single strands AWG 22, TR 64, bared and tin-plated
- Air exhaust over struts. Direction of rotation counter-clockwise, seen on rotor.
- Mass: 375 g (with aluminium housing : 455 g).

Nominal data	Air flow	Air flow	Nominal voltage	Voltage range	Sound pressure level	Sound power level	Sintec sleeve bearings / Ball bearings	Power input	Nominal speed	Temperature range	Service life L_{10} (40 °C) ebm-papst Standard	Service life L_{10} (T_{max}) ebm-papst Standard	Life expectancy L_{10} (40 °C) see P. 15	Curve	Specials
Type	m^3/h	CFM	VDC	VDC	dB(A)	Bel(A)	□ / ■	Watts	RPM	°C	Hours		Hours	P. 110	
DV 4112 N	280	164,7	**12**	9...15	61	6,9	■	21,0	6 000	-20...+65	70 000 / 40 000		142 500	1	
DV 4114 N	280	164,7	**24**	16...30	61	6,9	■	20,5	6 000	-20...+65	70 000 / 40 000		142 500	1	/2
DV 4118 N	280	164,7	**48**	36...60	61	6,9	■	20,0	6 000	-20...+65	70 000 / 40 000		142 500	1	

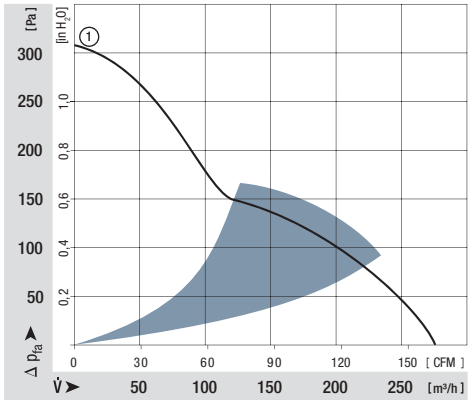

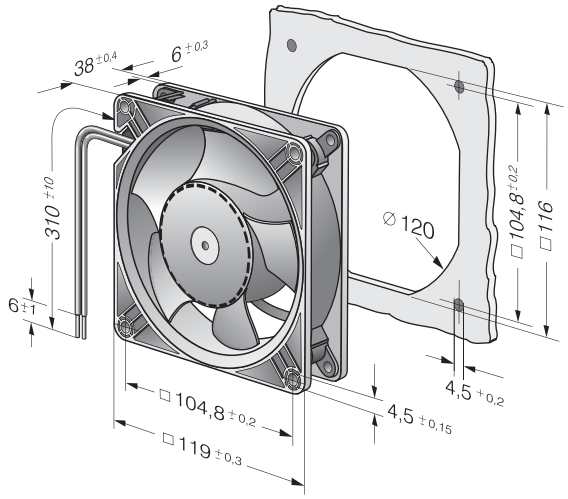

ebmpapst

max. 338 m^3/h

DC axial fans

Series 5200 N 127 x 127 x 38 mm

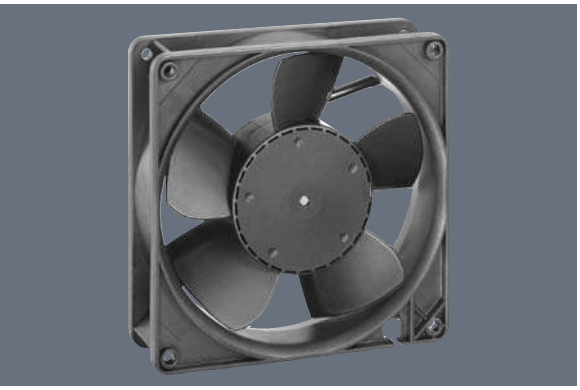

Highlights:

– Optional Vario-Pro: Highly adaptable software configuration of the fan enables a tailor-made solution to the specific requirements of your applications.

General characteristics:

– Material: fibreglass-reinforced plastic. Impeller PA, housing PBT.
– Fully integrated electronic commutation.
– Protected against reverse polarity and locking.
– Connection via single strands AWG 22, TR 64. Bared and tin-plated.
– Air exhaust over struts. Direction of rotation counter-clockwise, seen on rotor.
– Mass: 310 g.

Nominal data	Air flow	Air flow	Nominal voltage	Voltage range	Sound pressure level	Sound power level	Sintec sleeve bearings / Ball bearings	Power input	Nominal speed	Temperature range	Service life L_{10} (40 °C) ebm-papst Standard	Service life L_{10} (T_{max}) ebm-papst Standard	Life expectancy $L_{10\Delta}$ (40 °C) see P. 15	Curve	Specials
Type	m^3/h	CFM	VDC	VDC	dB(A)	Bel(A)	□ / ■	Watts	RPM	°C	Hours		Hours		P. 110
5212 NM	187	110,1	**12**	7...14,5	43	5,3	■	4,6	2 750	-20...+75	62 500 / 27 500		122 500	1	
5212 NN	216	127,1	**12**	7...14	46	5,6	■	6,0	3 150	-20...+75	57 500 / 25 000		112 500	2	
5212 NH	252	148,3	**12**	7...14	51	6,0	■	9,8	3 650	-20...+70	45 000 / 22 500		90 000	3	
5212 NHH*	340	200,0	**12**	9...15	58	6,6	■	19,0	4 900	-20...+65	45 000 / 25 000		90 000	4	/2
5214 NM	187	110,1	**24**	12...28	43	5,3	■	4,6	2 750	-20...+75	62 500 / 27 500		122 500	1	
5214 NN	216	127,1	**24**	12...28	46	5,6	■	6,0	3 150	-20...+75	57 500 / 25 000		112 500	2	/2
5214 NH	252	148,3	**24**	12...28	51	6,0	■	9,8	3 650	-20...+70	45 000 / 22 500		90 000	3	/2
5214 NHH*	340	200,0	**24**	16...30	58	6,6	■	17,5	4 900	-20...+65	45 000 / 25 000		90 000	4	/2
5218 NM	187	110,1	**48**	40...56	43	5,3	■	5,0	2 750	-20...+75	62 500 / 27 500		122 500	1	
5218 NN	216	127,1	**48**	40...56	46	5,6	■	6,5	3 150	-20...+65	57 500 / 32 500		112 500	2	
5218 NH	252	148,3	**48**	40...56	51	6,0	■	10,0	3 650	-20...+55	45 000 / 32 500		90 000	3	
5218 NHH*	340	200,0	**48**	36...60	58	6,6	■	18,0	4 900	-20...+65	45 000 / 25 000		90 000	4	/2

***Models NHH:** Fan housing with moulded-in spacers.

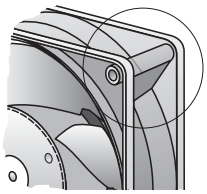

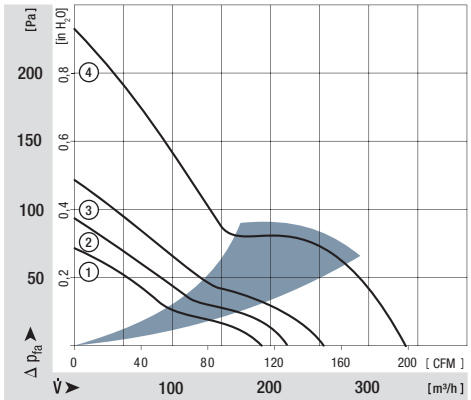

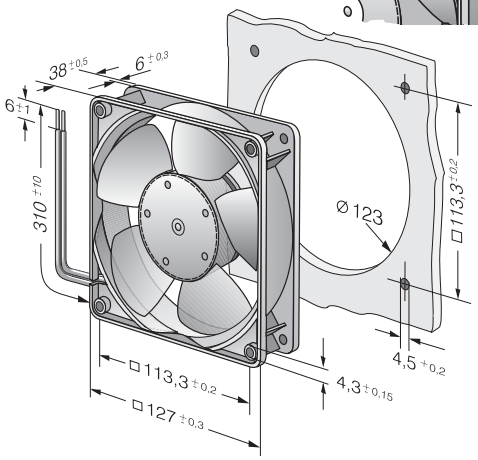

max. 324 m^3/h

DC diagonal fans

Series DV 5200 127 x 127 x 38 mm



Highlights:

- Diagonal fan with lower operating noise at high pressures.
- Very rigid compression curve for high air flow at high back pressure.
- Optional Vario-Pro: Highly adaptable software configuration of the fan enables a tailor-made solution to the specific requirements of your applications.
- DV 5214 /2HP with PWM control input and speed signal, additional inputs and outputs on request.

General characteristics:

- Material: housing of fibreglass-reinforced plastic, optionally of aluminium. Metal flange. Impeller of fibreglass-reinforced plastic PA; housing with grounding lug for screw M4 x 8 (Torx).
- Fully integrated electronic commutation. Protected against reverse polarity and locking.
- Connection via single strands AWG 22, TR 64, bared and tin-plated.
- Air exhaust over struts. Direction of rotation counter-clockwise, seen on rotor.
- Mass: 415 g (with metal housing: 490 g).

Nominal data	Air flow	Air flow	Nominal voltage	Voltage range	Sound pressure level	Sound power level	Sintec sleeve bearings / Ball bearings	Power input	Nominal speed	Temperature range	Service life L_{10} (40 °C) ebm-papst Standard	Service life L_{10} (T_{max}) ebm-papst Standard	Life expectancy $L_{10\Delta}$ (40 °C) see P. 15	Curve	Specials
Type	m^3/h	CFM	VDC	VDC	dB(A)	Bel(A)	□ / ■	Watts	RPM	°C	Hours		Hours	P. 110	
DV 5212 N	270	158,9	**12**	9...15	56	6,4	■	21,0	5 000	-20...+65	70 000 / 40 000		142 500	1	/2
DV 5214 N	270	158,9	**24**	16...30	56	6,4	■	20,4	5 000	-20...+65	70 000 / 40 000		142 500	1	/2
DV 5218 N	270	158,9	**48**	36...60	56	6,4	■	18,5	5 000	-20...+65	70 000 / 40 000		142 500	1	/2
Model comes standard with speed signal and PWM control input. Other versions by request.															
DV 5214 /2HP	320	188,2	**24**	16...30	62	7,2	■	38,5	6 000	-20...+65	62 500 / 35 000		125 000*	2	

Speed control range from 1000 RPM up to maximum nominal speed. Stationary at 0 % PWM, maximum speed at sensor break.

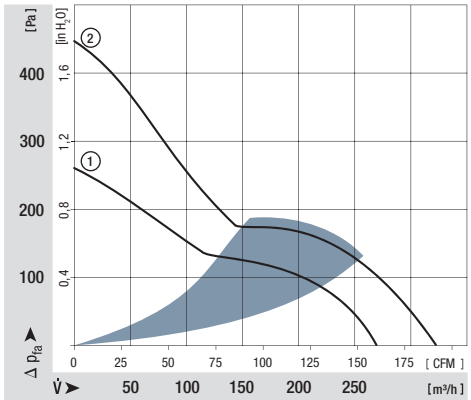

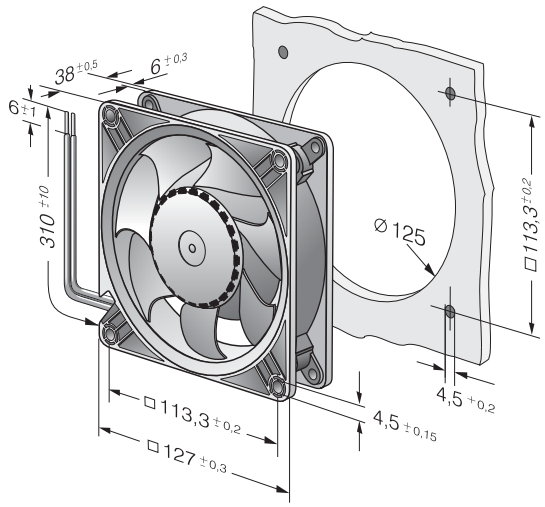

ebmpapst

max. 250 m^3/h

DC axial fans

Series 5100 N 135 x 135 x 38 mm

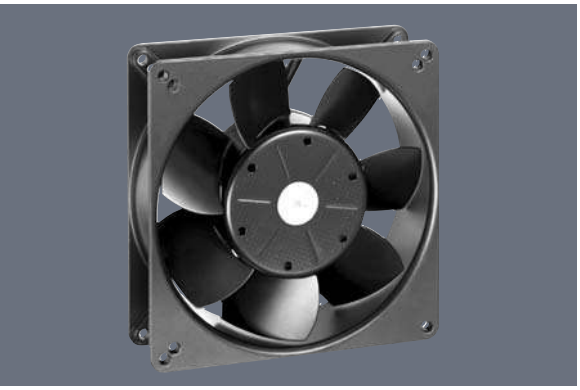

General characteristics:

- Material for aluminium housing and impeller; housing with grounding lug for screw M4 x 8 (Torx). 48 V version incl. screws.
- Fully integrated electronic commutation.
- Protected against reverse polarity and locking.
- Connection via single strands AWG 22, TR 64, bared and tin-plated.
- Air exhaust over struts. Direction of rotation counter-clockwise, seen on rotor.
- Mass: 650 g.

Nominal data	Air flow	Air flow	Nominal voltage	Voltage range	Sound pressure level	Sound power level	Sintec sleeve bearings / Ball bearings	Power input	Nominal speed	Temperature range	Service life L_{10} (40 °C) ebm-papst Standard	Service life L_{10} (T_{max}) ebm-papst Standard	Life expectancy $L_{10}\Delta$ (40 °C) see P. 15	Curve	Specials
Type	m^3/h	CFM	VDC	VDC	dB(A)	Bel(A)	□ / ■	Watts	RPM	°C	Hours		Hours	P. 110-112	
5112 N	250	147,1	**12**	6...15	48	6,1	■	9,5	2 900	-25...+72	80 000 / 37 500		157 500	1	/2
5114 N	250	147,1	**24**	12...30	48	6,1	■	9,5	2 900	-25...+72	80 000 / 37 500		157 500	1	/2
5118 N	250	147,1	**48**	24...60	48	6,1	■	9,5	2 900	-25...+72	80 000 / 37 500		157 500	1	/2/12

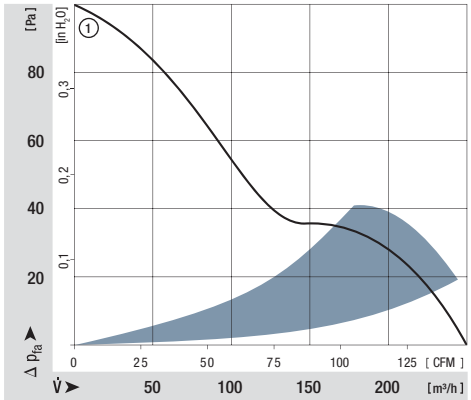

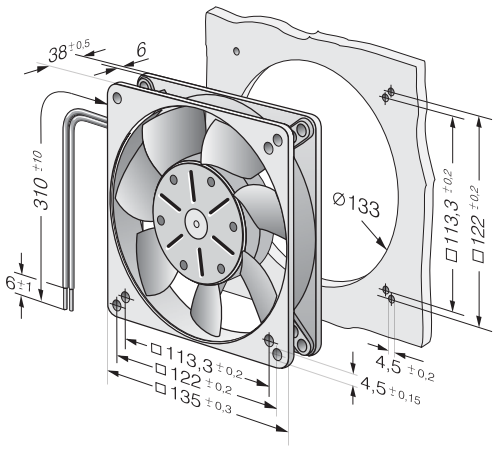

max. 338 m^3/h

DC axial fans

Series 5300 140 x 140 x 51 mm

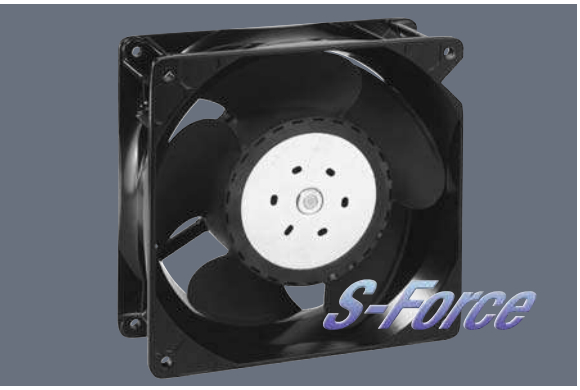

Highlights:
- Very rigid compression curve for high air flow at high back pressure.
- Low operating noise level at high back pressure.
- Available as standard with PWM control input and speed signal. Additional inputs and outputs on request.

General characteristics:
- Material: aluminium housing, fibreglass-reinforced PA impeller; housing with grounding lug for screw M4 x 8 (Torx).
- Protected against reverse polarity and locking.
- Connection via single strands AWG 22, TR 64. Bared and tin-plated.
- Air intake over struts. Direction of rotation counter-clockwise, seen on rotor.
- Mass: 900 g.

Nominal data		Air flow	Air flow	Nominal voltage	Voltage range	Sound pressure level	Sound power level	Sintec sleeve bearings / Ball bearings	Power input	Nominal speed	Temperature range	Service life L_{10} (40 °C) ebm-papst Standard	Service life L_{10} (T_{max}) ebm-papst Standard	Life expectancy $L_{10\Delta}$ (40 °C) see P. 15	Curve	Specials
	Type	m^3/h	CFM	VDC	VDC	dB(A)	Bel(A)	□ / ■	Watts	RPM	°C	Hours		Hours		
NEW	5314 /2HP	340	200	**24**	16...28	64	7,2	■	28,4	5 000	-20...+65	77 500/40 000		160 000	1	
NEW	5318 /2HP	340	200	**48**	36...72	64	7,2	■	27	5 000	-20...+65	77 500/40 000		160 000	1	

Speed control range from 700 RPM up to maximum nominal speed. Stationary at 0 % PWM, maximum speed at sensor break.

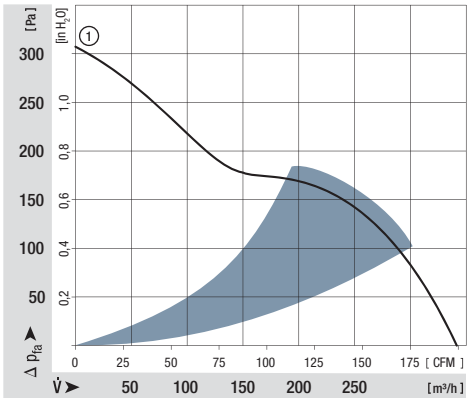

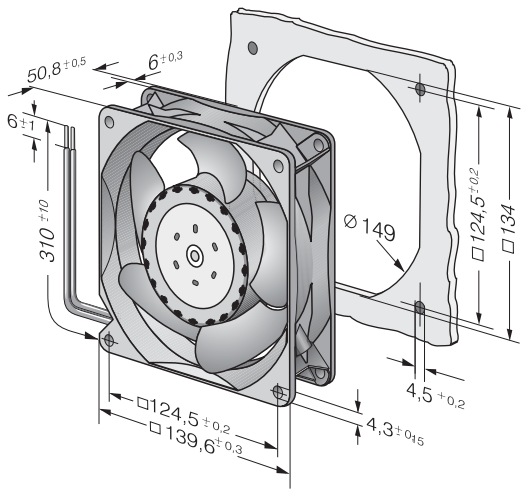

ebmpapst

max. 670 m^3/h

DC axial fans

Series 5300 TD 140 x 140 x 51 mm



Highlights:
- 3-phase fan drive with high degree of running smoothness.
- Very rigid compression curve for high air flow at high back pressure.
- Low operating noise level at high back pressure.
- Standard with PWM control input and speed signal, additional inputs and outputs on request.

General characteristics:
- Material: aluminium housing, fibreglass-reinforced PA impeller; housing with grounding lug for screw M4 x 8 (Torx).
- Protected against reverse polarity and locking.
- Connection via single strands AWG 20, TR 64. Bared and tin-plated.
- Air intake over struts. Direction of rotation counter-clockwise, seen on rotor.
- Mass: 900 g.

Nominal data	Air flow	Air flow	Nominal voltage	Voltage range	Sound pressure level	Sound power level	Sintec sleeve bearings Ball bearings	Power input	Nominal speed	Temperature range	Service life L_{10} (40 °C) ebm-papst Standard	Service life L_{10} (T_{max}) ebm-papst Standard	Life expectancy $L_{10\Delta}$ (40 °C) see P. 15	Curve	Specials
Type	m^3/h	CFM	VDC	VDC	dB(A)	Bel(A)	□ / ■	Watts	RPM	°C	Hours		Hours		P. 110
5312 /2 TDHP	410	241,3	**12**	8...16	70	7,7	■	43	6 000	-20...+70	70 000 / 35 000		140 000	1	/2
5314 /2 TDHP	410	241,3	**24**	16...36	70	7,7	■	42	6 000	-20...+70	70 000 / 35 000		140 000	1	/2
5314 /2 TDHHP	490	288,4	**24**	16...36	75	8,1	■	67	7 000	-20...+70	62 500 / 30 000		120 000	2	/2
5318 /2 TDHP	410	241,3	**48**	36...72	70	7,7	■	42	6 000	-20...+70	70 000 / 35 000		140 000	1	/2
5318 /2 TDHHP	490	288,4	**48**	36...72	75	8,1	■	66	7 000	-20...+70	62 500 / 30 000		120 000	2	/2
5318 /2 TDH4P	670	394,3	**48**	36...72	79	8,8	■	149	9 200	-20...+65	57 500 / 32 500		115 000	3	/2

Speed control range from 1000 RPM up to maximum nominal speed. Stationary at 0 % PWM, maximum speed at sensor break.

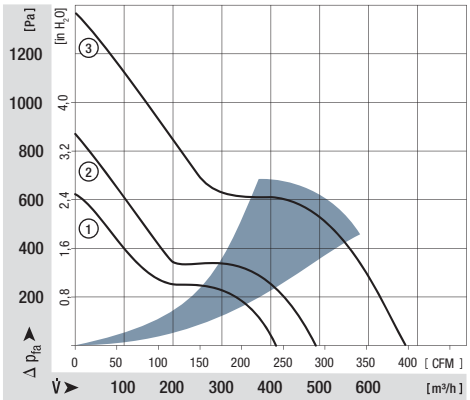

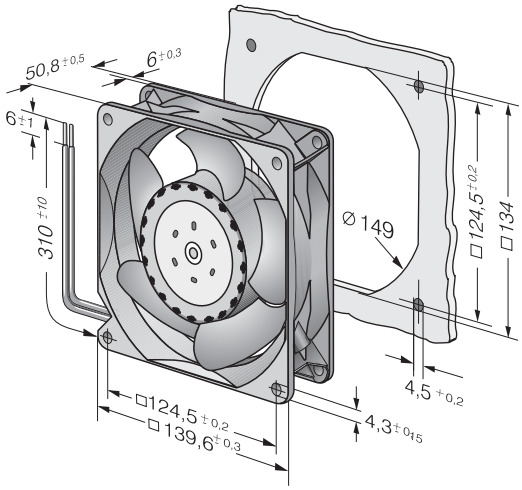

max. 420 m^3/h

DC axial fans

Series 7100 N 150 Ø x 38 mm



General characteristics:

- Material: Aluminium housing and impeller; housing with grounding lug for screw M4 x 8 (Torx).
- Fully integrated electronic commutation.
- Protected against reverse polarity and locking.
- Connection via single strands AWG 22, TR 64, bared and tin-plated.
- Air intake over struts. Direction of rotation counter-clockwise, seen on rotor.
- Mass: 620 g.

Nominal data	Air flow	Air flow	Nominal voltage	Voltage range	Sound pressure level	Sound power level	Sintec sleeve bearings Ball bearings	Power input	Nominal speed	Temperature range	Service life L_{10} (40 °C) ebm-papst Standard	Service life L_{10} (T_{max}) ebm-papst Standard	Life expectancy $L_{10\Delta}$ (40 °C) see P. 15	Curve	Specials
Type	m^3/h	CFM	VDC	VDC	dB(A)	Bel(A)	□ / ■	Watts	RPM	°C	Hours		Hours	P. 110	
7112 N	360	211,9	**12**	6...15	55	6,5	■	12,0	2 850	-25...+72	80 000 / 37 500		157 500	1	/2
7114 N	360	211,9	**24**	12...30	55	6,5	■	12,0	2 850	-25...+72	80 000 / 37 500		157 500	1	/2
7114 NH	420	247,2	**24**	12...26,5	59	7,0	■	19,0	3 350	-25...+72	75 000 / 35 000		147 500	2	
7118 N	360	211,9	**48**	24...60	55	6,5	■	12,0	2 850	-25...+72	80 000 / 37 500		157 500	1	/2

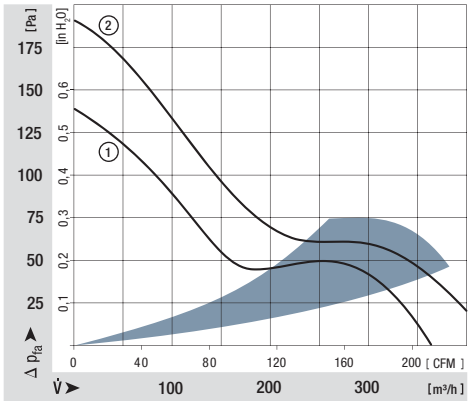

Strand fastened using cable tie;
cable tie protrudes 1 mm.

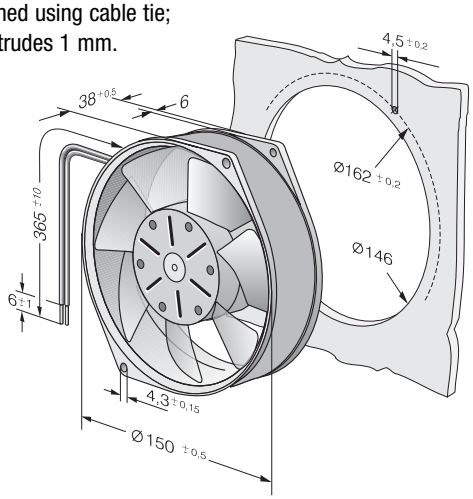

ebmpapst

max. 360 m^3/h

DC axial fans

Series 7200 N 150 Ø x 55 mm



Highlights:

– Optional Vario-Pro: Highly adaptable software configuration of the fan enables a tailor-made solution to the specific requirements of your applications.

General characteristics:

– Material: aluminium housing, fibreglass-reinforced PA impeller; housing with grounding lug for screw M4 x 8 (Torx).
– Fully integrated electronic commutation.
– Protected against reverse polarity and locking.
– Connection via single strands AWG 22, TR 64, bared and tin-plated.
– Air exhaust over struts. Direction of rotation counter-clockwise, seen on rotor.
– Mass: 725 g.

Nominal data	Air flow	Air flow	Nominal voltage	Voltage range	Sound pressure level	Sound power level	Sintec sleeve bearings Ball bearings	Power input	Nominal speed	Temperature range	Service life L_{10} (40 °C) ebm-papst Standard	Service life L_{10} (T_{max}) ebm-papst Standard	Life expectancy $L_{10\Delta}$ (40 °C) see P. 15	Curve	Specials
Type	m^3/h	CFM	VDC	VDC	dB(A)	Bel(A)	□ / ■	Watts	RPM	°C	Hours		Hours	P. 110-116	
7212 N	360	211,9	**12**	6...15	53	6,2	■	12,0	3 050	-25...+72	80 000 / 37 500		157 500	1	/2
7214 N	360	211,9	**24**	12...30	53	6,2	■	12,0	3 050	-25...+72	80 000 / 37 500		157 500	1	/12/17/19
7218 N	360	211,9	**48**	24...60	53	6,2	■	12,0	3 050	-25...+72	80 000 / 37 500		157 500	1	

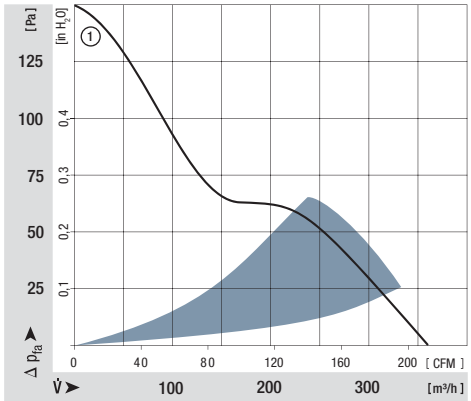

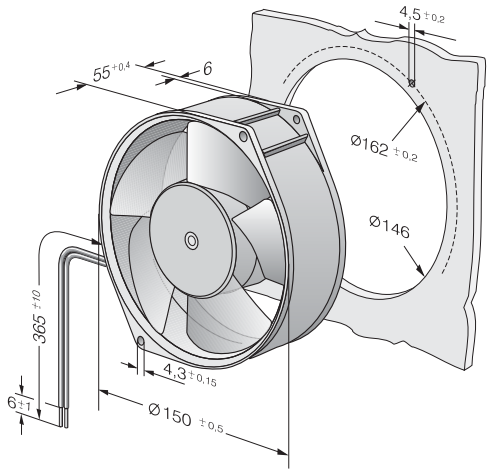

max. 350 m^3/h

DC axial fans

Series 6100 N 172 x 160 x 52 mm



Highlights:
- Compact, lightweight plastic housing.
- VARIOFAN models available with external temperature sensor.
- Optional Vario-Pro: Highly adaptable software configuration of the fan enables a tailor-made solution to the specific requirements of your applications.
- Open loop speed control, sensor and alarm signal available on request.

General characteristics:
- Material: housing and impeller of fibreglass-reinforced PA.
- Fully integrated electronic commutation.
- Protected against locking.
- Connection via single strands AWG 22, TR 64. Bared and tin-plated.
- Air exhaust over struts. Direction of rotation counter-clockwise, seen on rotor.
- Mass: 610 g.

	Nominal data	Air flow	Air flow	Nominal voltage	Voltage range	Sound pressure level	Sound power level	Sintec sleeve bearings Ball bearings	Power input	Nominal speed	Temperature range	Service life L_{10} (40 °C) ebm-papst Standard	Service life L_{10} (T_{max}) ebm-papst Standard	Life expectancy $L_{10\Delta}$ (40 °C) see P. 15	Curve	Specials
	Type	m^3/h	CFM	VDC	VDC	dB(A)	Bel(A)	□/■	Watts	RPM	°C	Hours		Hours		
NEW	6112 NM	350	206	**12**	8...15	49	5,9	■	11	2 850	-20...+70	80 000/37 500		157 500	1	
NEW	6114 NM	350	206	**24**	12...32	49	5,9	■	11	2 850	-20...+70	80 000/37 500		157 500	1	

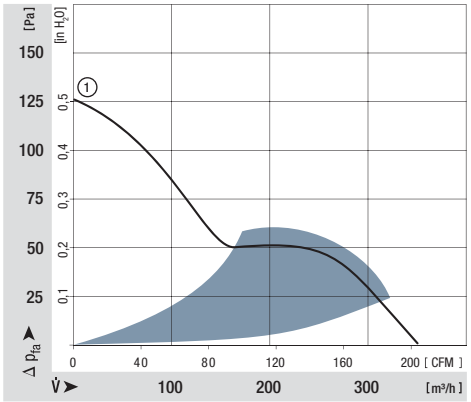

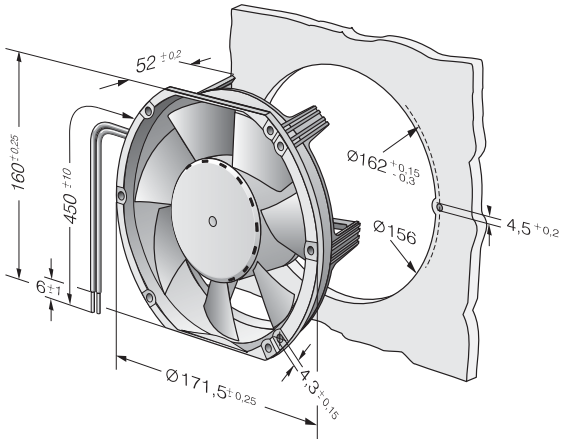

ebmpapst

max. 545 m^3/h

DC axial fans

Series 6300 172 Ø x 51 mm



Highlights:
- Very rigid compression curve for high air flow at high back pressure.
- Low operating noise level at high back pressure.
- Available as standard with PWM control input and speed signal. Additional inputs and outputs on request.

General characteristics:
- Material: aluminium housing, fibreglass-reinforced PA impeller; housing with grounding lug for screw M4 x 8 (Torx).
- Protected against reverse polarity and locking.
- Connection via single strands AWG 22, TR 64. Bared and tin-plated.
- Air exhaust over struts. Direction of rotation counter-clockwise, seen on rotor.
- Mass: 910 g.

Nominal data		Air flow	Air flow	Nominal voltage	Voltage range	Sound pressure level	Sound power level	Sintec sleeve bearings Ball bearings	Power input	Nominal speed	Temperature range	Service life L_{10} (40 °C) ebm-papst Standard	Service life L_{10} (T_{max}) ebm-papst Standard	Life expectancy $L_{10\Delta}$ (40 °C) see P. 15	Curve	Specials
	Type	m^3/h	CFM	VDC	VDC	dB(A)	Bel(A)	□/■	Watts	RPM	°C	Hours		Hours		
NEW	6314 /2MP	395	232,4	**24**	16...30	51	6,0	■	13	3 600	-20...+75	82 500/32 500		165 000	1	
NEW	6314 /2NP	470	276,5	**24**	16...30	56	6,5	■	23	4 400	-20...+70	80 000/40 000		160 000	2	
NEW	6314 /2HP	545	320,6	**24**	16...30	58	6,9	■	31	5 000	-20...+65	77 500/42 500		155 000	3	
NEW	6318 /2HP	545	320,6	**48**	36...72	58	6,9	■	32	5 000	-20...+65	77 500/42 500		155 000	3	

Speed control range from 700 RPM up to maximum nominal speed. Stationary at 0 % PWM, maximum speed at sensor break.

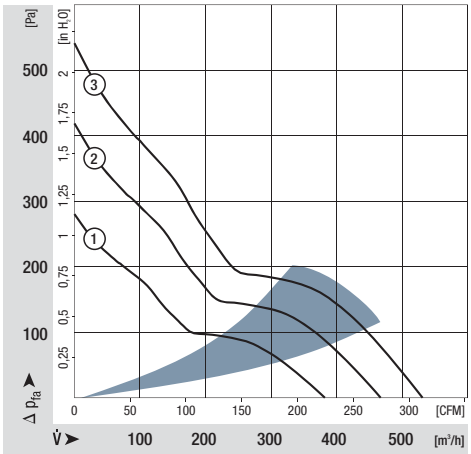

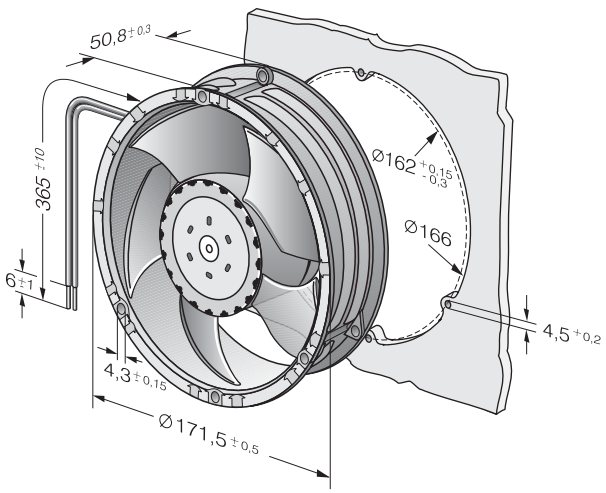

max. 950 m^3/h

DC axial fans

Series 6300 TD 172 Ø x 51 mm



Highlights:
- 3-phase fan drive high degree of running smoothness.
- Very rigid compression curve for high air flow at high back pressure.
- Low operating noise level at high back pressure.
- Standard with PWM control input and speed signal, additional inputs and outputs on request.

General characteristics:
- Material: aluminium housing, fibreglass-reinforced PA impeller; housing with grounding lug for screw M4 x 8 (Torx).
- Protected against reverse polarity and locking.
- Connection via single strands AWG 20, TR 64. Bared and tin-plated.
- Air exhaust over struts. Direction of rotation counter-clockwise, seen on rotor.
- Mass: 910 g.

Nominal data	Air flow	Air flow	Nominal voltage	Voltage range	Sound pressure level	Sound power level	Sintec sleeve bearings / Ball bearings	Power input	Nominal speed	Temperature range	Service life L_{10} (40 °C) ebm-papst Standard	Service life L_{10} (T_{max}) ebm-papst Standard	Life expectancy $L_{10}\Delta$ (40 °C) see P. 15	Curve	Specials
Type	m^3/h	CFM	VDC	VDC	dB(A)	Bel(A)	□ / ■	Watts	RPM	°C	Hours		Hours	P. 110	
6312 /2TDHP	600	353,1	**12**	8...16	60	7,3	■	40	5 500	-20...+70	75 000 / 37 500		150 000	1	/2
NEW 6314 /2TDHP-298	600	353,1	**24**	16...28	60	7,3	■	42	5 500	-20...+65	75 000 / 42 500		150 000	1	
NEW 6314 /2TDHP	600	353,1	**24**	16...36	60	7,3	■	40	5 500	-20...+70	75 000 / 37 500		150 000	1	/2
6314 /2TDHHP	710	417,9	**24**	16...36	69	7,9	■	67	7 000	-20...+70	62 500 / 30 000		120 000	2	/2
NEW 6318 /2TDHP-299	600	353,1	**48**	36...56	60	7,3	■	42	5 500	-20...+65	75 000 / 42 500		150 000	1	
NEW 6318 /2TDHP	600	353,1	**48**	36...72	60	7,3	■	40	5 500	-20...+70	75 000 / 37 500		150 000	1	/2
6318 /2TDHHP	710	417,9	**48**	36...72	69	7,9	■	67	7 000	-20...+70	62 500 / 30 000		120 000	2	/2
6318 /2TDH4P	950	559,1	**48**	36...72	75	8,4	■	150	9 200	-20...+65	52 500 / 30 000		107 500	3	/2

Speed control range from 1000 RPM up to maximum nominal speed. Stationary at 0 % PWM, maximum speed at sensor break.

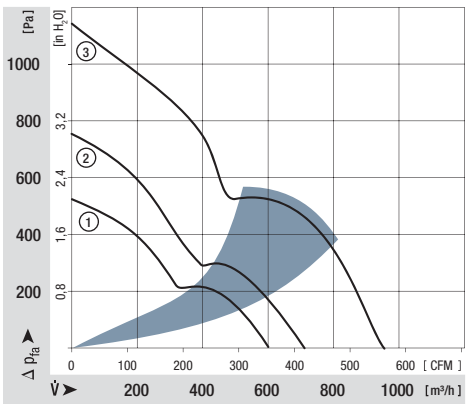

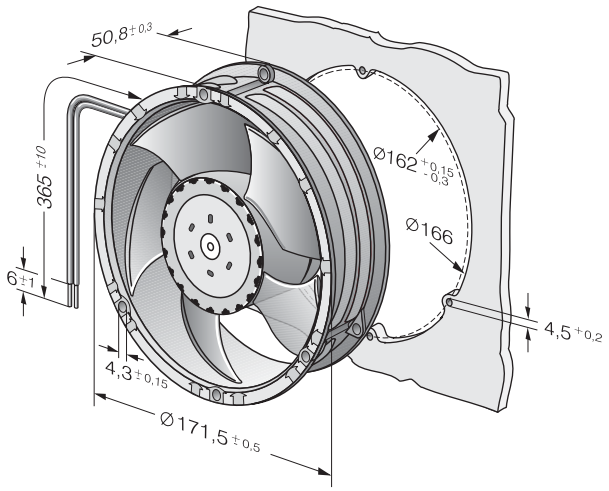

ebmpapst

max. 950 m^3/h

DC axial fans

Series 6300 TD 172 x 160 x 51 mm



Highlights:
- 3-phase fan drive with high degree of running smoothness.
- Very rigid compression curve for high air flow at high back pressure.
- Low operating noise level at high back pressure.
- Standard with PWM control input and speed signal, additional inputs and outputs on request.

General characteristics:
- Material: aluminium housing, fibreglass-reinforced PA impeller; housing with grounding lug for screw M4 x 8 (Torx).
- Protected against reverse polarity and locking.
- Connection via single strands AWG 20, TR 64. Bared and tin-plated.
- Air exhaust over struts. Direction of rotation counter-clockwise, seen on rotor.
- Mass: 910 g.

Nominal data		Air flow	Air flow	Nominal voltage	Voltage range	Sound pressure level	Sound power level	Sintec sleeve bearings / Ball bearings	Power input	Nominal speed	Temperature range	Service life L_{10} (40 °C) ebm-papst Standard	Service life L_{10} (T_{max}) ebm-papst Standard	Life expectancy $L_{10\Delta}$ (40 °C)	Curve	Specials
	Type	m^3/h	CFM	VDC	VDC	dB(A)	Bel(A)	□ / ■	Watts	RPM	°C	Hours		Hours		
NEW	6314 /2TDHHP-015	710	415,0	**24**	16...36	69	7,9	■	67	7 000	-20...+70	62 500 / 30 000		120 000	1	
NEW	6318 /2TDH4P-007	950	560,0	**48**	36...72	75	8,4	■	150	9 200	-20...+65	52 500 / 30 000		107 500	2	

Speed control range from 1000 RPM up to maximum nominal speed. Stationary at 0 % PWM, maximum speed at sensor break.

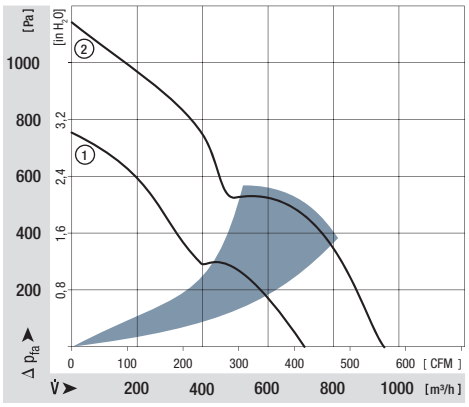

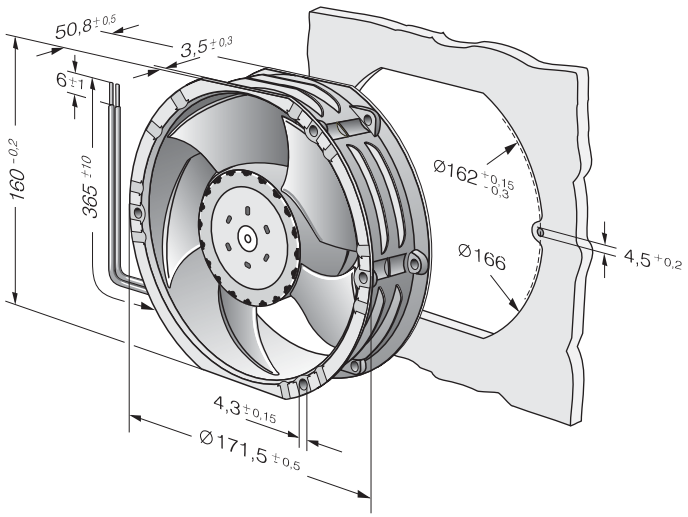

max. 540 m^3/h

DC diagonal fans

Series DV 6200 172 Ø x 51 mm

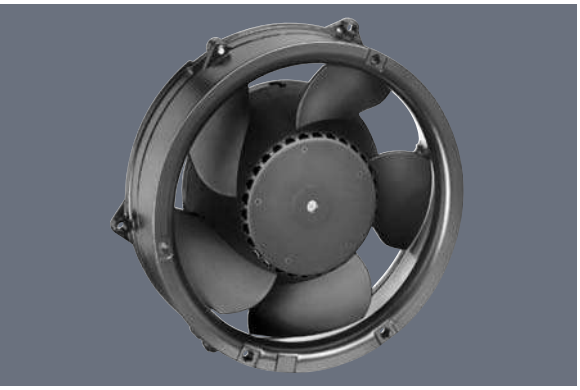

Highlights:
- Diagonal compact fan with low noise and high pressure saddle.
- Very rigid compression curve for high air flow at high back pressure.

General characteristics:
- Material: aluminium housing, fibreglass-reinforced PA impeller; housing with grounding lug for screw M4 x 8 (Torx). 48 V version incl. screws.
- Fully integrated electronic commutation.
- Protected against reverse polarity and locking.
- Connection via single strands AWG 22, TR 64. Bared and tin-plated.
- Air exhaust over struts. Direction of rotation counter-clockwise, seen on rotor.
- Mass: 820 g.

Nominal data	Air flow	Air flow	Nominal voltage	Voltage range	Sound pressure level	Sound power level	Sintec sleeve bearings / Ball bearings	Power input	Nominal speed	Temperature range	Service life L_{10} (40 °C) ebm-papst Standard / Service life L_{10} (T_{max}) ebm-papst Standard	Life expectancy $L_{10\Delta}$ (40 °C) see P. 15	Curve	Specials
Type	**m^3/h**	**CFM**	**VDC**	**VDC**	**dB(A)**	**Bel(A)**	**□ / ■**	**Watts**	**RPM**	**°C**	**Hours**	**Hours**	**P. 110/112**	
DV 6224	540	317,8	**24**	16...28	63	7,1	■	40,0	4 300	-20...+75	90 000 / 40 000	180 000	1	/2/12
DV 6248	540	317,8	**48**	28...60	63	7,1	■	40,0	4 300	-20...+75	90 000 / 40 000	180 000	1	

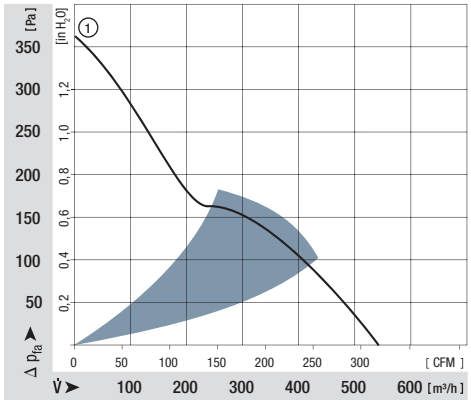

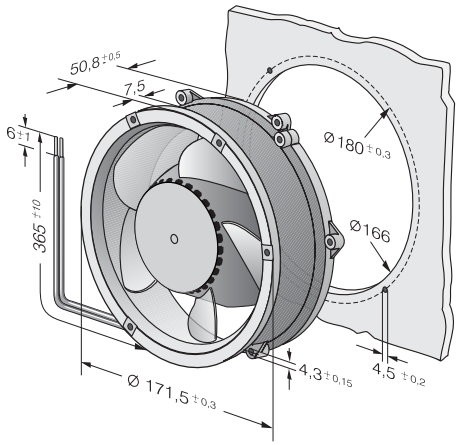

ebmpapst

max. 700 m^3/h

DC diagonal fans

Series DV 6200 TD TURBOFAN 172 Ø x 51 mm



Highlights:
- Diagonal compact fan with low noise and high pressure saddle.
- 3-phase fan drive with high degree of running smoothness.
- Very rigid compression curve for high air flow at high back pressure.
- Control inputs, alarm and speed signals available on request.

General characteristics:
- Material: aluminium housing, fibreglass-reinforced PA impeller; housing with grounding lug for screw M4 x 8 (Torx). 48 V version incl. screws.
- Fully integrated electronic commutation.
- Connection via single strands AWG 22, TR 64. Bared and tin-plated.
- Air exhaust over struts. Direction of rotation counter-clockwise, seen on rotor.
- Mass: 820 g.

Nominal data		Air flow	Air flow	Nominal voltage	Voltage range	Sound pressure level	Sound power level	Sintec sleeve bearings / Ball bearings	Power input	Nominal speed	Temperature range	Service life L_{10} (40 °C) ebm-papst Standard	Service life L_{10} (T_{max}) ebm-papst Standard	Life expectancy $L_{10\Delta}$ (40 °C) see P. 15	Curve	Specials
	Type	m^3/h	CFM	VDC	VDC	dB(A)	Bel(A)	□ / ■	Watts	RPM	°C	Hours		Hours		P.
	DV 6224 TD	700	421,0	**24**	16...36	69	7,8	■	89,0	5 500	-20...+60	65 000 / 40 000		130 000	2	
	DV 6248 TD	700	421,0	**48**	40...55	69	7,8	■	89,0	5 500	-20...+60	65 000 / 40 000		130 000	2	
min	DV 6224 TD...	100	58,9	**24**	16...36	29	—	■	2,0	800	-20...+60	65 000		130 000	1	P. 110-116 and120, 121,123
max		700	421,0			69	7,8		89,0	5 500					2	
min	DV 6248 TD...	100	58,9	**48**	40...55*	29	—	■	2,0	800	-20...+60	65 000 / 40 000		130 000	1	P. 110-116 and120, 121,123
max		700	421,0			69	7,8		89,0	5 500					2	

*Fan with extended voltage range available on request.

Models DV 6224 TD... and DV 6248 TD... are available in customer-specific, custom-developed variants only.
The data specified here are technically feasible benchmark values. The fans can be specially adapted to your application with signal outputs and control inputs.
For details of the technical possibilities, refer to the chapters on the sensor signal, alarm signal and control inputs beginning on page 107.

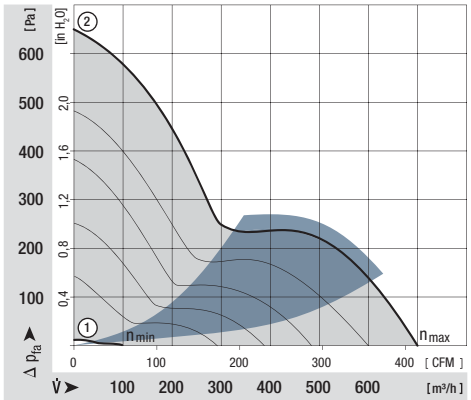

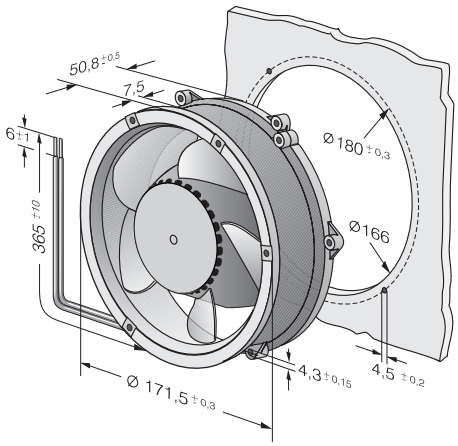

max. 480 m^3/h

DC axial fans

Series 6400 172 x 150 x 51 mm



Highlights:

– Optional Vario-Pro: Highly adaptable software configuration of the fan enables a tailor-made solution to the specific requirements of your applications.

General characteristics:

– Material: aluminium housing, fibreglass-reinforced PA impeller; housing with grounding lug for screw M4 x 8 (Torx). 48 V version incl. screws.
– Fully integrated electronic commutation.
– Protected against reverse polarity and locking.
– Electrical connection with flat plugs 3 x 0.5 mm.
– Air exhaust over struts. Direction of rotation counter-clockwise, seen on rotor.
– Mass: 760 g.

Nominal data	Air flow	Air flow	Nominal voltage	Voltage range	Sound pressure level	Sound power level	Sintec sleeve bearings Ball bearings	Power input	Nominal speed	Temperature range	Service life L_{10} (40 °C) ebm-papst Standard	Service life L_{10} (T_{max}) ebm-papst Standard	Life expectancy L_{10} (40 °C) see P. 15	Curve	Specials
Type	m^3/h	CFM	VDC	VDC	dB(A)	Bel(A)	□ / ■	Watts	RPM	°C	Hours		Hours	P. 110/112	
6412 M	350	206,0	**12**	8...15	52	6,0	■	12,0	2 850	-20...+72	80 000 / 37 500		157 500	1	
6424 M	350	206,0	**24**	12...32	52	6,0	■	12,0	2 850	-20...+72	80 000 / 37 500		157 500	1	
6424	410	241,3	**24**	12...28	57	6,4	■	18,0	3 400	-20...+72	75 000 / 35 000		125 000	2	/2
6424 H	480	282,5	**24**	12...28	63	7,1	■	26,0	4 000	-20...+55*	70 000 / 50 000		110 000	3	/12
6448	410	241,3	**48**	28...60	57	6,4	■	17,0	3 400	-20...+72	75 000 / 35 000		125 000	2	
6448 H*	480	282,5	**48**	28...60	63	7,1	■	26,0	4 000	-20...+55**	70 000 / 50 000		110 000	3	

* Leads 310 mm.
** 72 °C upon request.

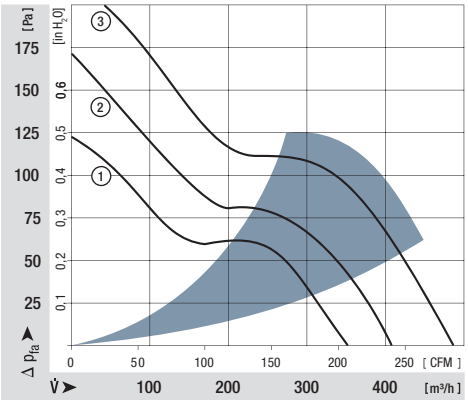

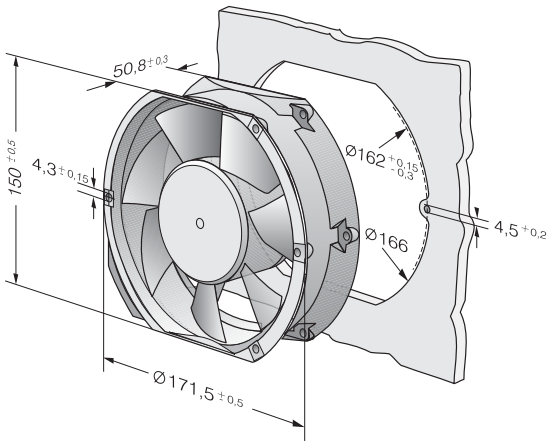

ebmpapst

max. 900 m^3/h

DC axial fans

Series 6400 TD TURBOFAN 172 x 150 x 51 mm



Highlights:

- 3-phase fan drive with high degree of running smoothness.
- Very rigid compression curve for high air flow at high back pressure.
- Control inputs, alarm and speed signals available on request.
- Optionally available with reversible speed.

General characteristics:

- Material: aluminium housing, fibreglass-reinforced PA impeller; housing with grounding lug for screw M4 x 8 (Torx). 48 V version incl. screws.
- Fully integrated electronic commutation.
- Connection via single strands AWG 22, TR 64. Bared and tin-plated.
- Air exhaust over struts. Direction of rotation counter-clockwise, seen on rotor. Direction of rotation reversible.
- Mass: 760 g.

Nominal data		Air flow	Air flow	Nominal voltage	Voltage range	Sound pressure level	Sound power level	Sintec sleeve bearings Ball bearings	Power input	Nominal speed	Temperature range	Service life L_{10} (40 °C) ebm-papst Standard	Service life L_{10} (T_{max}) ebm-papst Standard	Life expectancy $L_{10\Delta}$ (40 °C) see P. 15	Curve	Specials
Type		m^3/h	CFM	VDC	VDC	dB(A)	Bel(A)	□ / ■	Watts	RPM	°C	Hours		Hours		P.
min	6424 TD...	90	53,0	**24**	16...28	18	—	■	2,0	800	-20...+60	70 000 / 45 000		110 000	1	
max		600	353,1			65	7,4		50,0	5 100					2	
min	6448 TD...	90	53,0	**48**	40...55*	18	—	■	2,0	800	-20...+60	70 000 / 45 000		110 000	1	P. 110-116 and120, 121,123
max		600	353,1			65	7,4		50,0	5 100					2	
min	6448 TDHH...	90	53,0	**48**	36...72	18	—	■	2,0	800	-20...+60	70 000 / 45 000		110 000	1	P. 110-116 and120, 121,123
max		900	529,7			78	8,6		163,0	7500					3	

*Fan with extended voltage range available on request.

Models DV 6224 TD... and DV 6248 TD... are available in customer-specific, custom-developed variants only.
The data specified here are technically feasible benchmark values. The fans can be specially adapted to your application with signal outputs and control inputs.
For details of the technical possibilities, refer to the chapters on the sensor signal, alarm signal and control inputs beginning on page 108.

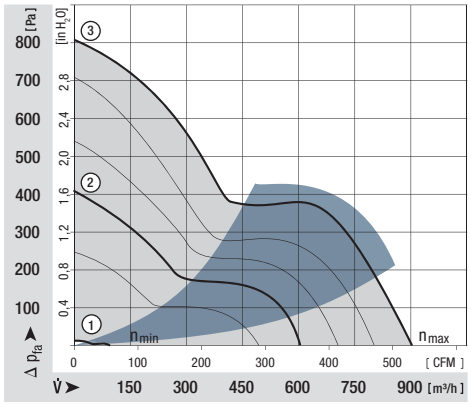

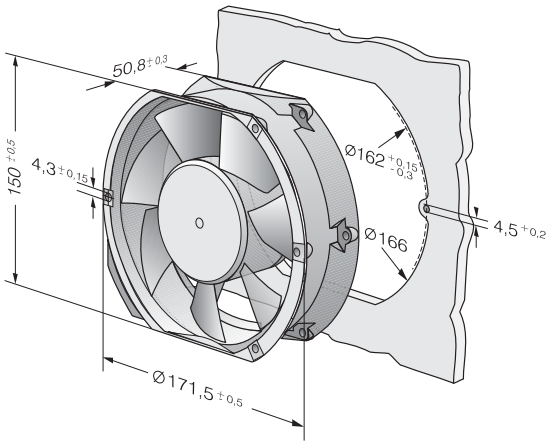

max. 530 m^3/h

DC diagonal fans

Series DV 6400 172 x 160 x 51 mm



Highlights:
- Diagonal compact fan with low noise and high pressure saddle.
- Very rigid compression curve for high air flow at high back pressure.
- Optional Vario-Pro: Highly adaptable software configuration of the fan enables a tailor-made solution to the specific requirements of your applications.

General characteristics:
- Material: aluminium housing, fibreglass-reinforced PA impeller; housing with grounding lug for screw M4 x 8 (Torx). 48 V version incl. screws.
- Fully integrated electronic commutation.
- Protected against reverse polarity and locking.
- Connection via single strands AWG 22, TR 64. Bared and tin-plated.
- Air exhaust over struts. Direction of rotation counter-clockwise, seen on rotor.
- Mass: 820 g.

Nominal data	Air flow	Air flow	Nominal voltage	Voltage range	Sound pressure level	Sound power level	Sintec sleeve bearings / Ball bearings	Power input	Nominal speed	Temperature range	Service life L_{10} (40 °C) ebm-papst Standard	Service life L_{10} (T_{max}) ebm-papst Standard	Life expectancy $L_{10\Delta}$ (40 °C) see P. 15	Curve	Specials
Type	**m^3/h**	**CFM**	**VDC**	**VDC**	**dB(A)**	**Bel(A)**	□ / ■	**Watts**	**RPM**	**°C**	**Hours**		**Hours**		**P. 112**
DV 6424	530	311,9	**24**	16...28	65	7,3	■	40,0	4 300	-20...+75	90 000 / 45 000		180 000	1	/12
DV 6448	530	311,9	**48**	28...60	65	7,3	■	40,0	4 300	-20...+75	90 000 / 45 000		180 000	1	/12

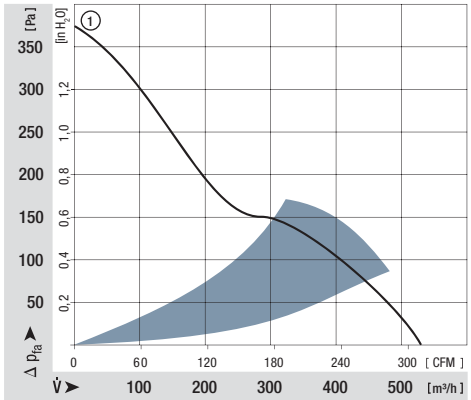

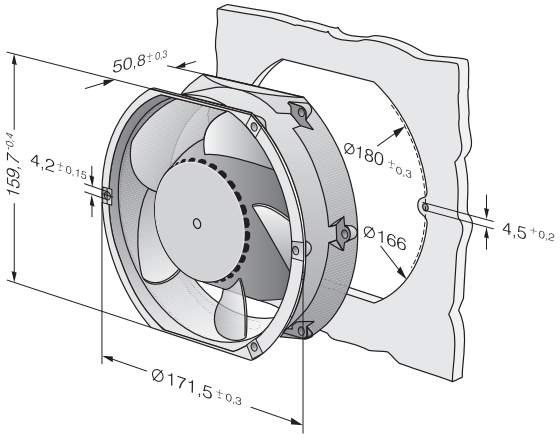

ebmpapst

max. 680 m^3/h

DC diagonal fans

Series DV 6400 TD TURBOFAN 172 x 160 x 51 mm



Highlights:
- Diagonal compact fan with low noise and high pressure saddle.
- 3-phase fan drive with high degree of running smoothness.
- Very rigid compression curve for high air flow at high back pressure.
- Control inputs, plus alarm and speed signals available on request.
- Optionally available with reversible speed.

General characteristics:
- Material: aluminium housing, fibreglass-reinforced PA impeller; housing with grounding lug for screw M4 x 8 (Torx). 48 V version incl. screws.
- Fully integrated electronic commutation.
- Connection via single strands AWG 22, TR 64. Bared and tin-plated.
- Air exhaust over struts. Direction of rotation counter-clockwise, seen on rotor. Direction of rotation reversible.
- Mass: 820 g.

Nominal data		Air flow	Air flow	Nominal voltage	Voltage range	Sound pressure level	Sound power level	Sintec sleeve bearings / Ball bearings	Power input	Nominal speed	Temperature range	Service life L_{10} (40 °C) ebm-papst Standard	Service life L_{10} (T_{max}) ebm-papst Standard	Life expectancy $L_{10\Delta}$ (40 °C) see P. 15	Curve	Specials
Type		m^3/h	CFM	VDC	VDC	dB(A)	Bel(A)	□ / ■	Watts	RPM	°C	Hours		Hours		P.
	DV 6424 TD	680	400,2	**24**	16...28	71	7,9	■	91,0	5 500	-20...+60	65 000 / 40 000		130 000	2	
min	DV 6424 TD...	100	58,9	**24**	16...28	29	—	■	2,0	800	-20...+60	65 000 / 40 000		130 000	1	P. 110-116 and120, 121,123
max		680	400,2			71	7,9		91,0	5 500					2	
min	DV 6448 TD...	100	58,9	**48**	40...55	29	—	■	2,0	800	-20...+60	65 000 / 40 000		130 000	1	P. 110-116 and120, 121,123
max		680	400,2			71	7,9		86,0	5 500					2	

Models DV 6424 TD... and DV 6448 TD... are available in customer-specific, custom-developed variants only.
The data specified here are technically feasible benchmark values. The fans can be specially adapted to your application with signal outputs and control inputs.
For details of the technical possibilities, refer to the chapters on the sensor signal, alarm signal and control inputs beginning on page 108.

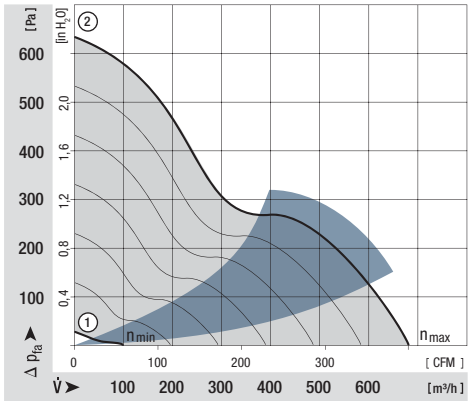

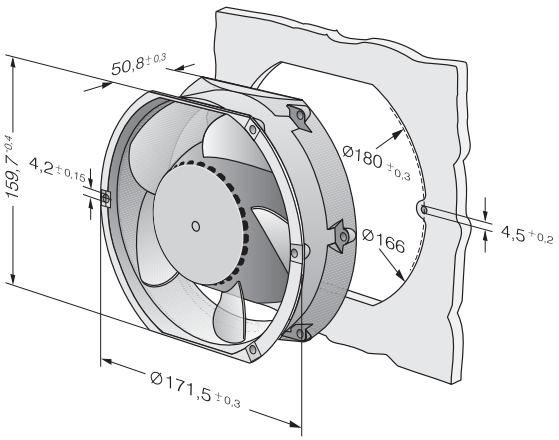

max. 1220 m^3/h

DC axial fans

Series 2200 FTD 220 x 200 x 51 mm



Highlights:
- High- performance 200 mm fan with compact overall height.
- Low operating noise level at high back pressure.
- 3-phase fan drive high degree of running smoothness and high efficiency.
- Standard with speed signal and PWM (P) or 0-10VDC / PWM (O) speed control.

General characteristics:
- Material: aluminium housing, fibreglass-reinforced PA impeller; housing with grounding lug for screw M4 x 8.
- Electronic commutation fully integrated.
- Protected against reverse polarity and locking.
- Connection via single strands AWG 20, UL 1007 / AWG 22, UL 1061, bared and tin-plated.
- Air exhaust over struts. Direction of rotation counter-clockwise, seen on rotor.
- Mass: 1000 g.

Nominal data	Air flow	Air flow	Nominal voltage	Voltage range	Sound pressure level	Sound power level	Sintec sleeve bearings / Ball bearings	Power input	Nominal speed	Temperature range	Service life L_{10} (40 °C) ebm-papst Standard	Service life L_{10} (T_{max}) ebm-papst Standard	Life expectancy $L_{10\Delta}$ (40 °C)	Curve	Specials
Type	m^3/h	CFM	VDC	VDC	dB(A)	Bel(A)	□ / ■	Watts	RPM	°C	Hours		Hours	P. 110	
NEW 2214 F/2TDH0	790	464,7	**24**	16...30	62	7,1	■	35,0	4250	-25...+75	90 000 / 42 500		180 000	1	/2
NEW 2214 F/2TDHH0	940	552,9	**24**	16...36	66	7,4	■	35,0	5000	-25...+70	85 000 / 42 500		170 000	2	/2
NEW 2218 F/2TDH0	790	464,7	**48**	36...57	62	7,1	■	48,0	4250	-25...+75	90 000 / 42 500		180 000	1	/2
NEW 2218 F/2TDHH0	940	552,9	**48**	36...72	66	7,4	■	48,0	5000	-25...+70	85 000 / 42 500		170 000	2	/2
NEW 2218 F/2TDH4P	1220	717,6	**48**	36...72	72	8,2	■	103,0	6500	-20...+65	70 000 / 40 000		140 000	3	/2

Speed control range from 1000 RPM up to maximum nominal speed. Stationary at 0 % PWM / 0 V,
Type O: stationary at sensor break; Type P: maximum speed at sensor break.

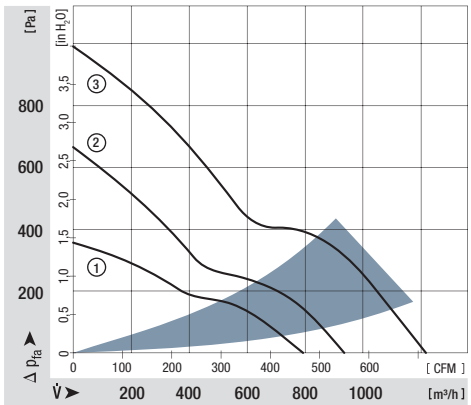

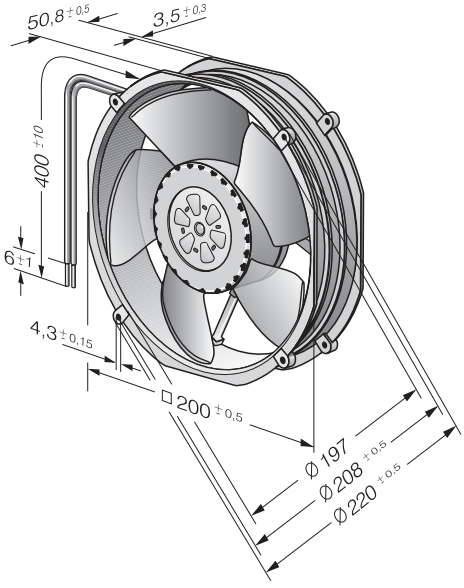

ebmpapst

max. 1090 m^3/h

DC axial fans

W1G 200 225 x 225 x 80 mm



- Material: Die-cast aluminium wall ring, 9 sheet steel blades. Blades and rotor coated in black.
- Protected against reverse polarity and locking.
- Direction or air flow: “V”, exhaust over struts. Direction of rotation counter-clockwise, seen on rotor.
- Type of protection: IP 42. Insulation class: “B”.
- Maintenance-free ball bearings.
- Control input 0-10 V DC / PWM and tach output.
- Electrical connection with terminal strip.
- Continuous operation (S1).
- Mass: 2.1 kg.

Nominal data	Air flow	Air flow	Nominal voltage	Voltage range	Sound pressure level	Sound power level	Sintec sleeve bearings Ball bearings	Power input	Nominal speed	Temperature range	Service life L_{10} (40 °C) ebm-papst Standard	Service life L_{10} (T_{max}) ebm-papst Standard	Curve
Type	m^3/h	CFM	VDC	VDC	dB(A)	Bel(A)	□ / ■	Watts	RPM	°C	Hours		
W1G 200-HH77-52	1090	641,6	**24**	16...28	60	—	■	55,0	2 950	-25...+60	57 000 / 42 000		1
W1G 200-HH01-52	1090	641,6	**48**	36...57	60	—	■	55,0	2 950	-25...+60	57 000 / 42 000		1

	n [RPM]	P_1 [W]	Lp_A [dB(A)]
¶'	2300	73	63
,'	2970	77	62
'	3100	80	63
'	2970	80	66
¶	2950	55	60
,	2890	58	60
	2800	61	61
″	2780	63	64
.	2270	27	55
˘	2230	28	54
—	2170	29	54
	2130	30	57

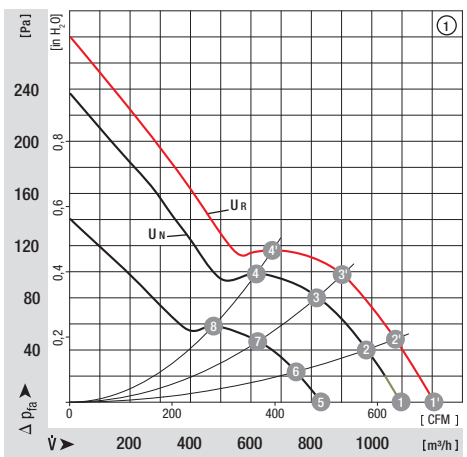

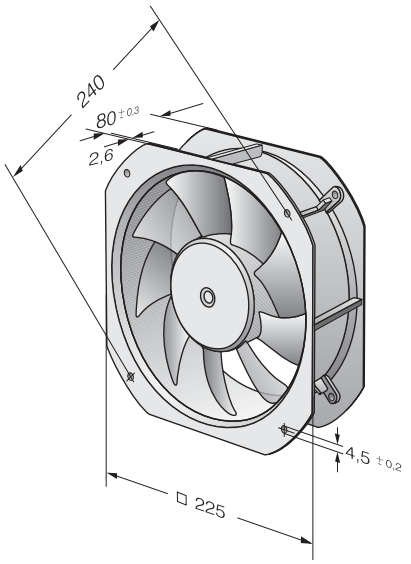

max. 1245 m^3/h

DC diagonal module

K1G 200 225 x 225 x 80 mm



- Material: Housing made of fibreglass-reinforced PA6 plastic, seven blades made of fibreglass-reinforced PA6 plastic. Rotor coated in black
- Protected against reverse polarity and locking.
- Direction of air flow “V”. Direction of rotation CW, seen on rotor.
- Type of protection: IP 20 (... 02); IP 44 (... 04). Insulation class: “B”.
- Maintenance-free ball bearings.
- Control input 0-10 VDC / PWM and tach output.
- Electrical connection via connection line AWG 20, 4x brass lead tips crimped.
- Continuous operation (S1).
- Mass: 1.7 kg.

Nominal data		Air flow	Air flow	Nominal voltage	Voltage range	Current draw	Sound power level	Sintec sleeve bearings Ball bearings	Power input	Nominal speed	Temperature range	Service life L_{10} (40 °C) ebm-papst Standard	Service life L_{10} (T_{max}) ebm-papst Standard	Curve
	Type	**m^3/h**	**CFM**	**VDC**	**VDC**	**A**	**dB(A)**	□ / ■	**Watts**	**RPM**	**°C**	**Hours**		
NEW	K1G 200-AD65-04	1020	600,3	**24**	16...28	4,7	76	■	95	3 400	-25...+60	67 000 / 33 000		1
NEW	K1G 200-AD31-02	1045	614,9	**24**	16...28	5,3	77	■	107	3 520	-25...+70	100 000 / 50 000		2
NEW	K1G 200-AD49-04	1095	644,4	**48**	36...57	3,4	77	■	120	3 650	-25...+60	80 000 / 32 000		3
NEW	K1G 200-AD37-02	1245	732,7	**48**	36...57	5,6	81	■	183	4 140	-25...+70	75 000 / 30 000		4

	n [RPM]	P_1 [W]	I [A]	Lw_A [dB(A)]
¶	3400	95	4,70	76
,	3410	116	5,61	74
	3410	119	5,75	74
″	3410	117	5,62	76
¶	3520	107	5,30	77
,	3520	127	6,24	75
	3520	129	6,31	76
″	3520	126	6,18	76
¶	3650	120	3,40	77
,	3650	141	3,90	75
	3650	145	3,99	76
″	3650	141	3,88	78
¶	4140	183	5,60	81
,	4090	212	6,46	79
	4060	213	6,52	79
″	4110	211	6,43	80

Air performance measured as per: ISO 5801, Installation category A, without protection against accidental contact

Suction-side noise levels: Lw_A as per ISO 13347

The acoustic values given are only valid under the measurment conditions listed and may vary depending on the installation situation.

With any deviation to the standard setup, the specific values have to be checked and reviewed once installed or fitted!

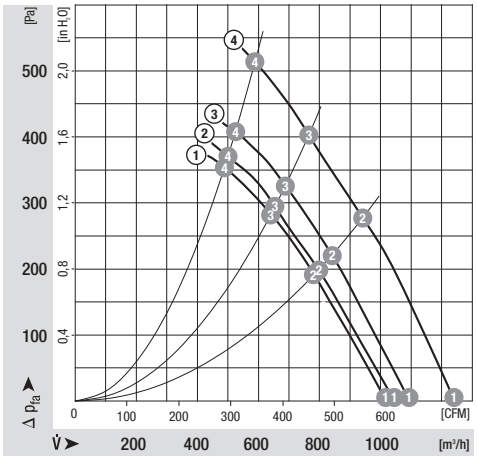

Cable assignment:
Red = UN
Yellow = 0-10 VDC
White = Speed monitoring output
Blue = GND

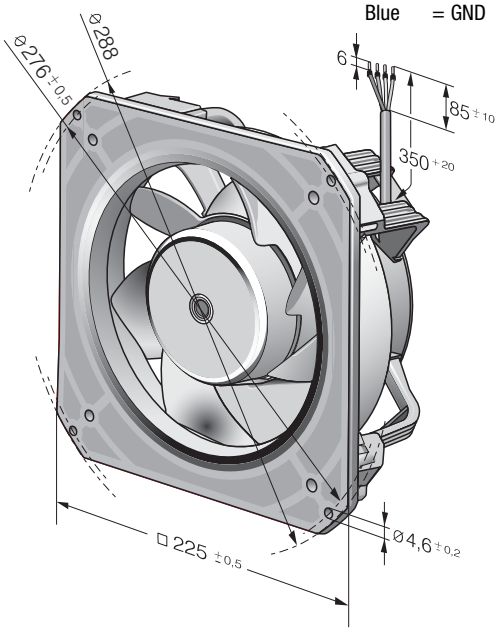

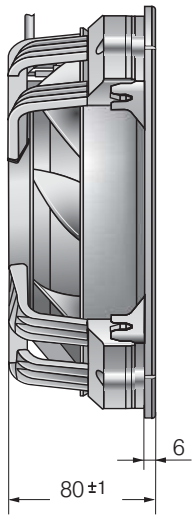

ebmpapst

max. 1640 m^3/h

DC diagonal module

K3G 200 225 x 225 x 89 mm

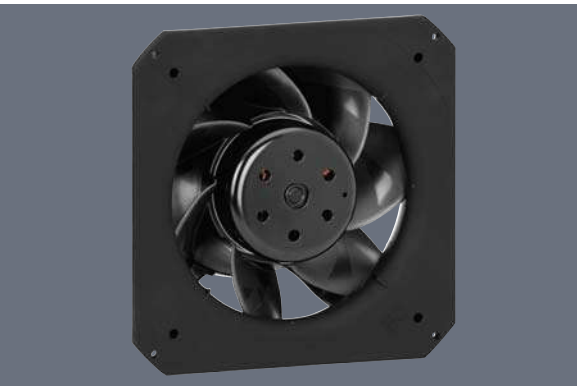

- Material: Housing made of fibreglass-reinforced PA6 plastic, seven blades made of fibreglass-reinforced PA6 plastic. Rotor coated in black
- Protected against reverse polarity and locking.
- Direction of air flow “V”. Direction of rotation CW, seen on rotor.
- Type of protection: IP 20 (... 02); IP 44 (... 04). Insulation class: “B”.
- Maintenance-free ball bearings.
- Control input 0-10 VDC / PWM and tach output.
- Electrical connection via connection line AWG 16, 4x crimped core-end sleeves.
- Continuous operation (S1).
- Mass: 2.2 kg.

Nominal data		Air flow	Air flow	Nominal voltage	Voltage range	Current draw	Sound power level	Sintec sleeve bearings Ball bearings	Power input	Nominal speed	Temperature range	Service life L_{10} (40 °C) ebm-papst Standard	Service life L_{10} (T_{max}) ebm-papst Standard	Curve
	Type	m^3/h	CFM	VDC	VDC	A	dB(A)	□ / ■	Watts	RPM	°C	Hours		
NEW	K3G 200-BDA3-04	1215	716,0	24	16...28	7,7	81	■	185	4 060	-25...+60	55 000 / 31 000		1
NEW	K3G 200-BDA1-02	1215	716,0	24	16...28	7,7	81	■	185	4 060	-25...+65	60 000 / 32 000		1
NEW	K3G 200-BDA4-04	1550	911,0	48	36...57	7,1	86	■	339	5 140	-25...+60	52 000 / 32 000		2
NEW	K3G 200-BDA2-02	1640	965,0	48	36...57	8,7	87	■	418	5 480	-25...+60	40 000 / 22 000		3

	n [RPM]	P_1 [W]	I [A]	Lw_A [dB(A)]
¶	4060	185	7,70	81
,	4010	204	8,48	78
	4010	209	8,70	78
″	4020	208	8,66	79
¶	5140	339	7,10	86
,	5070	373	7,78	83
	5060	385	8,01	83
″	5080	380	7,91	84
¶	5480	418	8,70	87
,	5250	421	8,77	84
	5190	422	8,78	83
″	5240	421	8,77	85

Air performance measured as per: ISO 5801, Installation category A, without protection against accidental contact

Suction-side noise levels: Lw_A as per ISO 13347

The acoustic values given are only valid under the measurment conditions listed and may vary depending on the installation situation.

With any deviation to the standard setup, the specific values have to be checked and reviewed once installed or fitted!

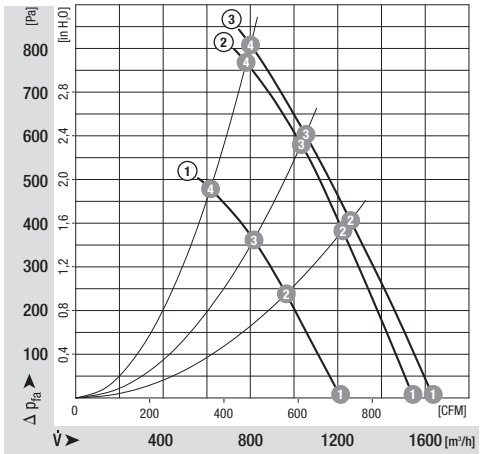

Cable assignment:

Red = UN
Yellow = 0-10 VDC
White = Speed monitoring output
Blue = GND

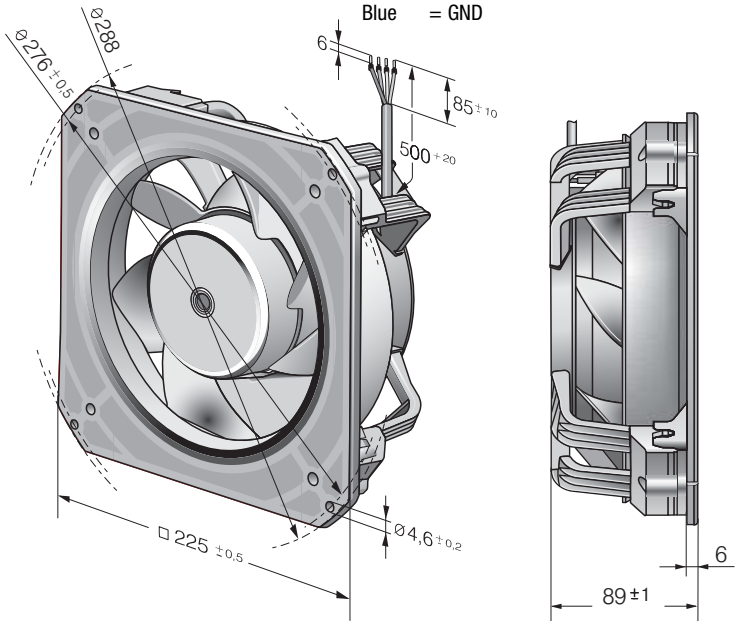

max. 1920 m^3/h

DC axial fans

W1G 250 280 x 280 x 80 mm



- Material: Die-cast aluminium wall ring, 7 sheet steel blades. Blades and rotor coated in black.
- Protected against reverse polarity and locking.
- Direction or air flow: “V”, exhaust over struts. Direction of rotation counter-clockwise, seen on rotor.
- Type of protection: IP 42. Insulation class: “B”.
- Maintenance-free ball bearings.
- Control input 0-10 V DC / PWM and tach output.
- Electrical connection with terminal strip.
- Continuous operation (S1).
- Mass: 2.4 kg.

Nominal data	Air flow	Air flow	Nominal voltage	Voltage range	Sound pressure level	Sound power level	Sintec sleeve bearings Ball bearings	Power input	Nominal speed	Temperature range	Service life L_{10} (40 °C) ebm-papst Standard	Service life L_{10} (T_{max}) ebm-papst Standard	Curve
Type	**m^3/h**	**CFM**	**VDC**	**VDC**	**dB(A)**	**Bel(A)**	**□ / ■**	**Watts**	**RPM**	**°C**	**Hours**		
W1G 250-HH37-52	1920	1130,1	**24**	16...28	70	—	■	105,0	2 750	-25...+60	57 000 / 38 000		1
W1G 250-HH67-52	1920	1130,1	**48**	36...57	70	—	■	105,0	2 750	-25...+60	57 000 / 38 000		1

	n [RPM]	P_1 [W]	Lp_A [dB(A)]
¶'	2920	129	71
,'	2800	132	72
'	2680	135	71
'	2600	139	72
¶	2750	105	70
,	2630	110	69
	2520	111	69
"	2440	114	70
.	2610	73	66
‹	2320	75	67
—	2230	78	67
	2170	80	68

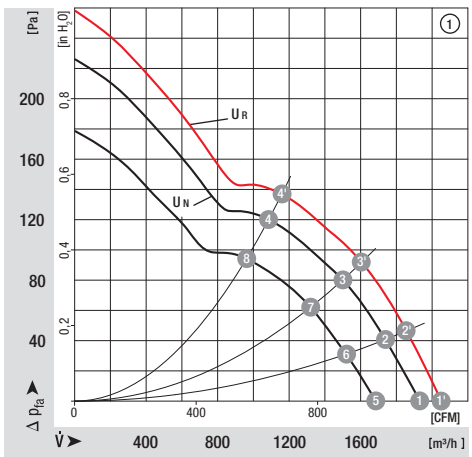

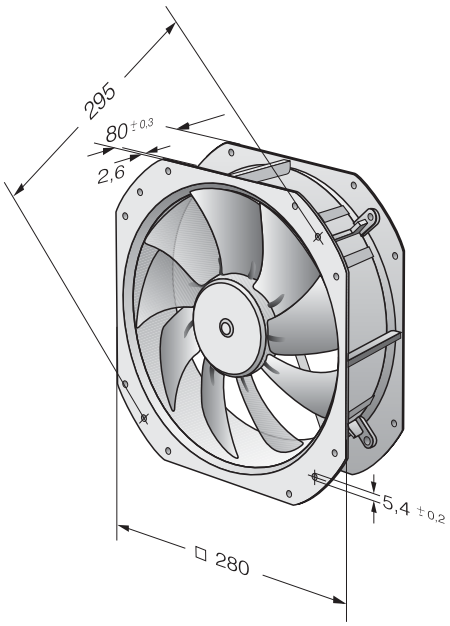

ebmpapst

DC centrifugal fans

	DC centrifugal fan overview	77
	DC centrifugal fans	79
	DC tangential fans	105



Technical information





Product line
Our centrifugal product line includes fans for every application. Whether as free-running impellers with a diameter between 97 mm and 225 mm or as assemblies in a ready-to-install, compact housing with inlet nozzle with an edge length between 51 mm and 270 mm. Of course, all models feature high-efficiency, brushless motor technology.

Electronic protection against reverse polarity
ebm-papst DC fans have electronically commutated drives with electronic protection against reverse polarity.The electronics are conveniently located in the fan hub.

Product life expectancy
A distinctive feature of DC fan technology is the convincingly high product life expectancy. Thanks to the excellent efficiency of the brushless drives, the thermal load of the bearings is reduced, thus considerably increasing the life expectancy of the fans.

Protection class
DC fans with sleeve and ball bearings are powered by Class E insulated motors. All ebm-papst fans conform to the requirements of Protection Class IP 20. Fans conforming to IP 54 and special protection classes are also available.

Voltage range
Many of our DC fans can be operated on voltages that are up to 50% lower and 25% higher than their nominal voltage (see Voltage range in the technical tables). This enables the air performance to be adapted to the cooling requirements and allows the noise to be reduced, even if the fan does not have a control input.

Closed-loop speed control and monitoring
Closed-loop speed control and function monitoring are becoming increasingly important in many applications. ebm-papst offers many fans in the standard design with a control input and open collector speed signal.

S-Force centrifugal – RadiCal
The new S-Force centrifugal fans provide peak performance among fans of this type. With air flow capacity at over 1500 m³/h and a pressure build-up of up to 1000 pascals, the highest heat flows are manageable. In addition, the models are extremely efficient due to the multi-pole, electronically commutated drive motors and can be adapted individually to every application thanks to intelligent motor features. Some models use our new, highly efficient RadiCal impellers.

Centrifugal fans for DC operation

Overview of air performance

Dimensions	Series	Air flow		Page
mm		m^3/h	10 20 30 40 50 60 70 80 90 100 200 300 400 500 600 700 800 900 1000 2000 3000	
105 x 59 x 79	RV 40	18...24		79
□ 51 x 15	RLF 35	9,6		80
□ 76 x 27	RL 48	22...28		81
97 x 93,5 x 33	RL 65	56...61		82
□ 121 x 37	RL 90 N	40...55		83
□ 127 x 25	RLF 100	64...80		84
□ 135 x 38	RG 90 N	55		85
□ 180 x 40	RG 125 N	60...137		86
□ 220 x 56	RG 160 N	139...209		87
□ 220 x 56	RG 160 NTD	59...370	NEW	88
□ 225 x 85	RG 190 TD	630...930	NEW	89
□ 270 x 99	RG 220 TD	1090...1280	NEW	90
□ 270 x 119	RG 225 TD	1040...1210	NEW	91
Ø 97 x 41	RET 97 TD	220	NEW	92
Ø 104 x 25	REF 100	86...104		93
Ø 101 x 52	RER 101	190		94
Ø 120 x 54	RER 120 TD	320...390	NEW	95
Ø 138 x 35	RER 125 N	74...166		96
Ø 133 x 91	RER 133 TD	460...565	NEW	97
Ø 165 x 51	RER 160 N	255		98
Ø 165 x 51	RER 160 NTD	66...354	NEW	99
Ø 175 x 55	REF 175 TD	800	NEW	100
Ø 175 x 69	RER 175 TD	600...980	NEW	101
Ø 190 x 69	RER 190 TD	650...970	NEW	102
Ø 220 x 71	RER 220 TD	1090...1280	NEW	103
Ø 225 x 99	RER 225 TD	1080...1600	NEW	104
201...413 x 50 x 48	QG 030	75...155		105
		m^3/h	10 20 30 40 50 60 70 80 90 100 200 300 400 500 600 700 800 900 1000 2000 3000	

Centrifugal fans for DC operation

Overview of technically feasible designs

Centrifugal fans		Dimensions	VDE, UL, CSA	Sintec sleeve bearings/ball bearings	Sensor	Go / No-go alarm	Alarm with limit speed	External temperature sensor	Internal temperature sensor	PWM control input	Analogue control input	Multi-option control input	Humidity protection	IP >= IP54	Salt spray fog protection	Page
	Series	mm					OPTIONAL									P.
	RV 40	105 x 59 x 79	yes	■	–	•	–	–	–	•	–	–	•	–	–	79
	RLF 35	51 x 51 x 15	*	■	•	–	–	–	–	–	–	–	•	–	–	80
	RL 48	76 x 76 x 27	yes	■	•	•	–	–	–	–	–	–	•	–	–	81
	RL 65	97 x 93,5 x 33	*	■	•	•	•	•	•	•	•	–	•	–	–	82
	RL 90 N	121 x 121 x 37	yes	□/■	•	•	•	•	•	•	•	–	•	•	•	83
	RLF 100	127 x 127 x 25	yes	■	•	•	•	•	•	•	•	–	•	•	–	84
	RG 90 N	135 x 135 x 38	yes	□/■	•	•	•	•	•	•	•	–	•	•	•	85
	RG 125 N	180 x 180 x 40	yes	■	•	•	•	•	•	•	•	–	•	•	•	86
	RG 160 N	220 x 220 x 56	yes	■	•	•	•	•	•	•	•	–	•	•	•	87
NEW	RG 160 NTD	220 x 220 x 56	yes	■	•	•	•	•	•	•	•	–	•	•	•	88
NEW	RG 190 TD	225 x 225 x 85	yes	■	•	•	•	•	•	•	•	•	•	•	•	89
NEW	RG 220 TD	270 x 270 x 99	yes	■	•	•	•	•	•	•	•	•	•	•	–	90
NEW	RG 225 TD	270 x 270 x 132	yes	■	•	•	•	•	•	•	•	•	•	•	–	91
NEW	RET 97 TD	97 Ø x 41	*	■	•	•	•	•	•	•	•	–	•	–	–	92
	REF 100	100 Ø x 25	yes	■	•	•	•	•	•	•	•	–	•	•	–	93
	RER 101	101 Ø x 52	*	■	•	•	•	•	•	•	•	–	•	–	–	94
NEW	RER 120 TD	120 Ø x 54	*	■	•	•	•	•	•	•	•	–	•	–	–	95
	RER 125 N	138 Ø x 35	yes	■	•	•	•	•	•	•	•	–	•	–	–	96
NEW	RER 133 TD	133 Ø x 91	*	■	•	•	•	•	•	•	•	•	•	–	–	97
	RER 160 N	165 Ø x 51	yes	■	•	•	•	•	•	•	•	–	•	•	•	98
NEW	RER 160 NTD	165 Ø x 51	yes	■	•	•	•	•	•	•	•	–	•	•	•	99
NEW	REF 175 TD	175 Ø x 55	*	■	•	•	•	•	•	•	•	•	•	–	–	100
NEW	RER 175 TD	175 Ø x 69	*	■	•	•	•	•	•	•	•	•	•	•	•	101
NEW	RER 190 TD	190 Ø x 69	*	■	•	•	•	•	•	•	•	•	•	•	•	102
NEW	RER 220 TD	220 Ø x 71	*	■	•	•	•	•	•	•	•	•	•	–	–	103
NEW	RER 225 TD	225 Ø x 99	*	■	•	•	•	•	•	•	•	•	•	–	–	104
	QG 030	201...413 x 50 x 48	yes	■	•	–	–	–	–	–	–	–	•	–	–	105

* approvals applied for

– not yet available
• available

□ Sleeve Bearings
■ Bearings

Please note that these special versions are not possible for all voltages and speeds, and not in all combinations. The special versions are designed for specific customers and projects. As a rule they are not available off the shelf and are tied to minimum volumes.
Please consult your customer support representative about the feasibility of your special variant.

Optional special versions / Information pictograms (see page 20)

On the catalogue pages and in the overview on page 20, the pictograms shown provide information about the special designs that are technically feasible in the fan series. Please note that these special versions are not possible for all voltages and speeds, and not in all combinations.

The special versions are designed for specific customers and projects and are not usually available off the shelf.

max. 24 m^3/h

DC centrifugal fans

Series RV 40 105 x 59 x 79 mm



Highlights:

- Pressure-optimised blower.
- Motor with very low structure-borne noise properties.
- Forward curved impeller.

General characteristics:

- Fibreglass-reinforced plastic scroll housing and impeller.
- Fully integrated electronic commutation.
- Protected against reverse polarity and locking.
- Direction of air flow: axial air intake, centrifugal air exhaust out of the outlet.
- Connection via single strands AWG 26, TR 64. Bared and tin-plated.
- Mass: 100 g.

Nominal data	Air flow	Air flow	Nominal voltage	Voltage range	Sound power level	Sintec sleeve bearings / Ball bearings	Power input	Nominal speed	Temperature range	Service life L_{10} (40 °C) ebm-papst Standard	Service life L_{10} (T_{max}) ebm-papst Standard	Life expectancy $L_{10\Delta}$ (40 °C) see P. 15	Curve	Specials
Type	m^3/h	CFM	VDC	VDC	Bel(A)	□ / ■	Watts	RPM	°C	Hours		Hours		
RV 40-18/12 L	18	10,6	**12**	9...16	4,0	■	2,0	3 900	-20...+70	70 000 / 35 000		110 000	1	
RV 40-18/12 H	24	14,1	**12**	9...16	5,0	■	4,5	4 800	-20...+70	50 000 / 25 000		80 000	2	

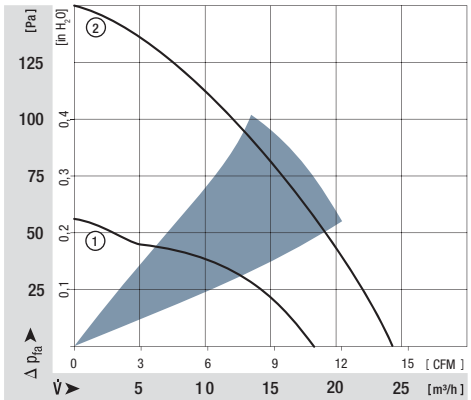

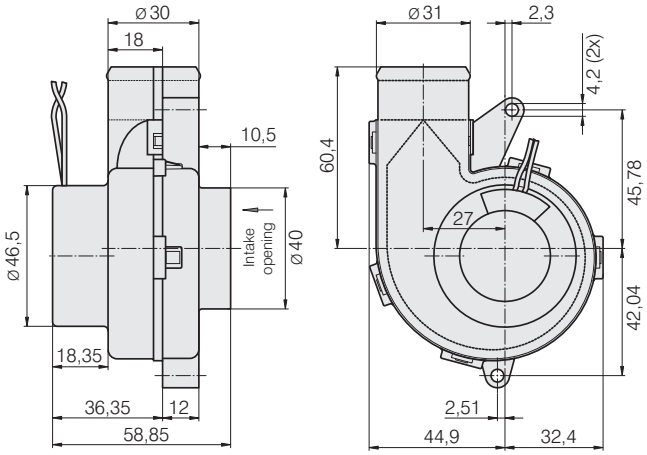

max. 9,6 m^3/h

DC centrifugal fans

Series RLF 35 51 x 51 x 15 mm

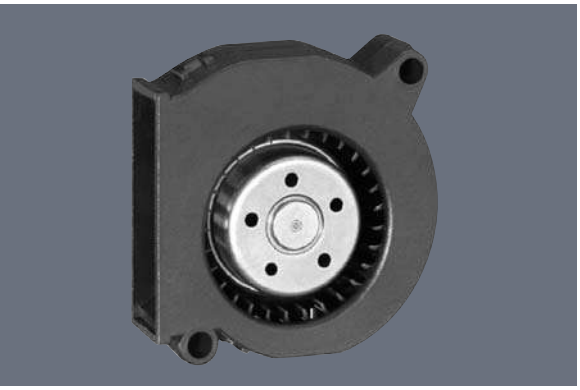

Highlights:

- Noise-optimised air outlet in scroll housing.
- Very flat and powerful centrifugal fan.
- Forward curved impeller.

General characteristics:

- Fibreglass-reinforced plastic scroll housing and impeller.
- Fully integrated electronic commutation.
- Protected against reverse polarity and locking.
- Direction of air flow: axial air intake, centrifugal air exhaust out of the outlet.
- Connection via single strands AWG 26, TR 64. Bared and tin-plated.
- Mass: 40 g.

Nominal data	Air flow	Air flow	Nominal voltage	Voltage range	Sound power level	Sintec sleeve bearings Ball bearings	Power input	Nominal speed	Temperature range	Service life L_{10} (40 °C) ebm-papst Standard	Service life L_{10} (T_{max}) ebm-papst Standard	Life expectancy $L_{10\Delta}$ (40 °C) see P. 15	Curve	Specials
Type	m^3/h	CFM	VDC	VDC	Bel(A)	□/■	Watts	RPM	°C	Hours		Hours		
RLF 35-8/12 N	9,6	5,7	**12**	8...13,2	5,5	■	3,5	6 700	-20...+70	60 000 / 30 000		120 000	1	
RLF 35-8/14 N	9,6	5,7	**24**	14...28	5,5	■	4,3	6 700	-20...+70	60 000 / 30 000		120 000	1	

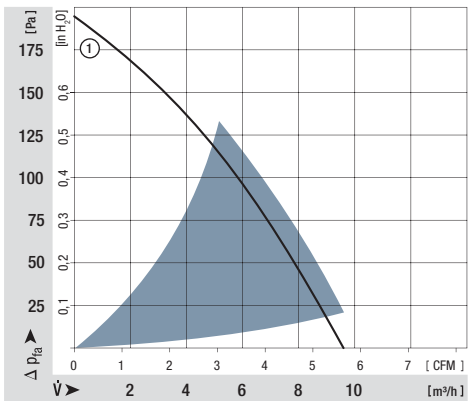

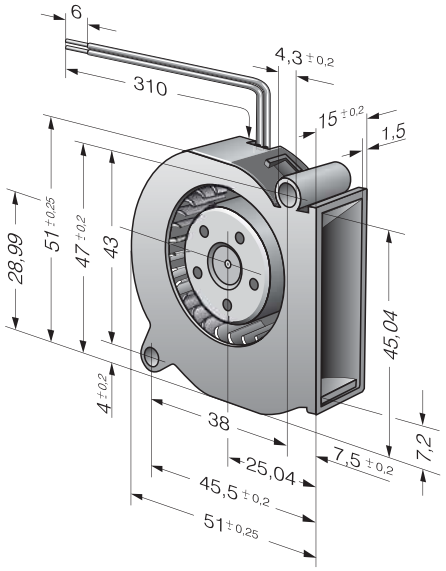

ebmpapst

max. 28 m^3/h

DC centrifugal fans

Series RL 48 76 x 76 x 27 mm

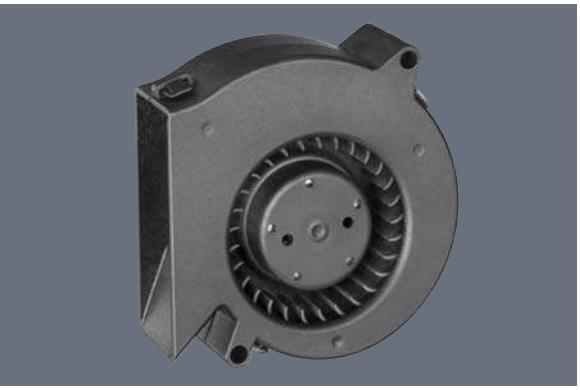

Highlights:

- Pressure-optimised blower.
- Noise-optimised air outlet in scroll housing.
- Forward curved impeller.

General characteristics:

- Fibreglass-reinforced plastic scroll housing and impeller.
- Fully integrated electronic commutation.
- Protected against reverse polarity and locking.
- Direction of air flow: axial air intake, centrifugal air exhaust out of the outlet.
- Connection via single strands AWG 26, TR 64. Bared and tin-plated.
- Mass: 75 g.

Nominal data	Air flow	Air flow	Nominal voltage	Voltage range	Sound power level	Sintec sleeve bearings Ball bearings	Power input	Nominal speed	Temperature range	Service life L_{10} (40 °C) ebm-papst Standard	Service life L_{10} (T_{max}) ebm-papst Standard	Life expectancy $L_{10}\Delta$ (40 °C) see P. 15	Curve	Specials
Type	m^3/h	CFM	VDC	VDC	Bel(A)	□/■	Watts	RPM	°C	Hours		Hours	P. 110	
RL 48-19/12 ML	22	12,9	**12**	8...15	5,3	■	2,9	3 500	-20...+70	70 000 / 35 000		140 000	1	
RL 48-19/12	28	16,5	**12**	8...13,5	5,7	■	5,0	4 400	-20...+70	60 000 / 30 000		120 000	2	/2
RL 48-19/14 ML	22	12,9	**24**	18...28	5,3	■	2,9	3 500	-20...+70	70 000 / 35 000		140 000	1	
RL 48-19/14	28	16,5	**24**	18...26,4	5,7	■	5,0	4 400	-20...+70	60 000 / 30 000		120 000	2	/2

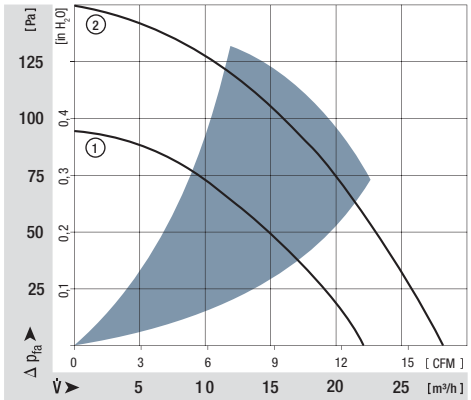

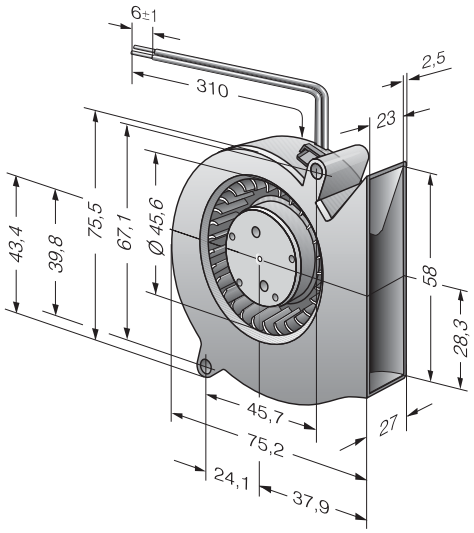

max. 61 m^3/h

DC centrifugal fans

Series RL 65 97 x 93,5 x 33 mm

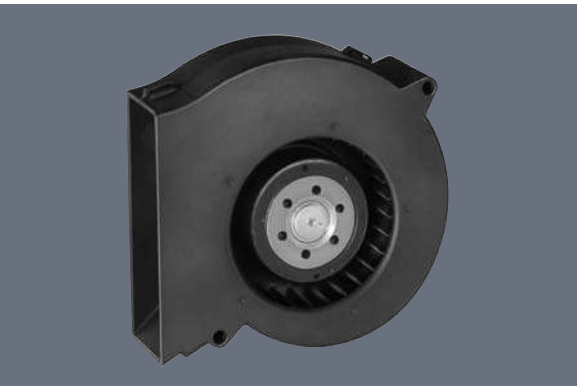

Highlights:

- Optional Vario-Pro: Highly adaptable software configuration of the fan enables a tailor-made solution to the specific requirements of your applications.
- Pressure-optimised blower. Noise-optimised air outlet in scroll housing.
- Forward curved impeller.
- Integrated snap-in fins for easy assembly.

General characteristics:

- Fibreglass-reinforced plastic scroll housing and impeller.
- Fully integrated electronic commutation.
- Protected against reverse polarity and locking.
- Direction of air flow: axial air intake, centrifugal air exhaust out of the outlet.
- Connection via single strands AWG 26, TR 64. Bared and tin-plated.
- Mass: 170 g.

Nominal data	Air flow	Air flow	Nominal voltage	Voltage range	Sound power level	Sintec sleeve bearings Ball bearings	Power input	Nominal speed	Temperature range	Service life L_{10} (40 °C) ebm-papst Standard	Service life L_{10} (T_{max}) ebm-papst Standard	Life expectancy $L_{10}\Delta$ (40 °C) see P. 15	Curve	Specials
Type	m^3/h	CFM	VDC	VDC	Bel(A)	□/■	Watts	RPM	°C	Hours		Hours	P. 110	
RL 65-21/12	56	33,0	**12**	6,8…13,8	6,6	■	15,0	4 500	-20…+70	60 000 / 30 000		120 000	1	/2
RL 65-21/12H	61	35,9	**12**	6.8...13,2	6,8	■	19,2	4 900	-20...+55	55 000 / 37 500		105 000	2	
RL 65-21/14	56	33,0	**24**	12...26,4	6,6	■	14,0	4 500	-20…+70	60 000 / 30 000		120 000	1	
RL 65-21/14H	61	35,9	**24**	12...26,4	6,8	■	18,0	4 900	-20...+60	55 000 / 35 000		105 000	2	

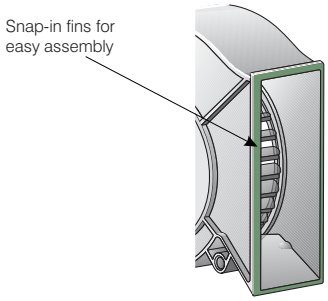

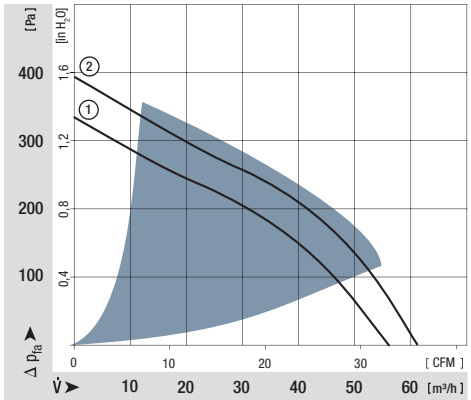

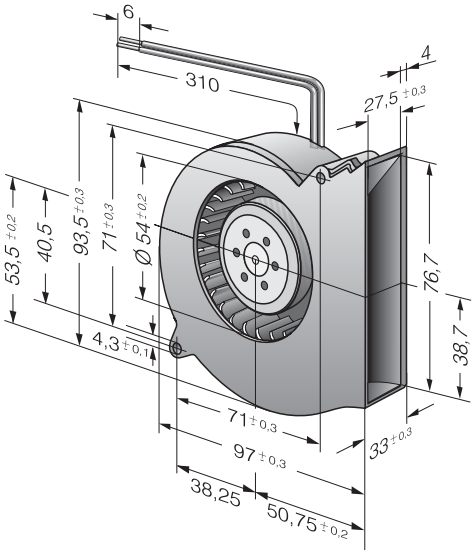

ebmpapst

max. 55 m^3/h

DC centrifugal fans

Series RL 90 N 121 x 121 x 37 mm

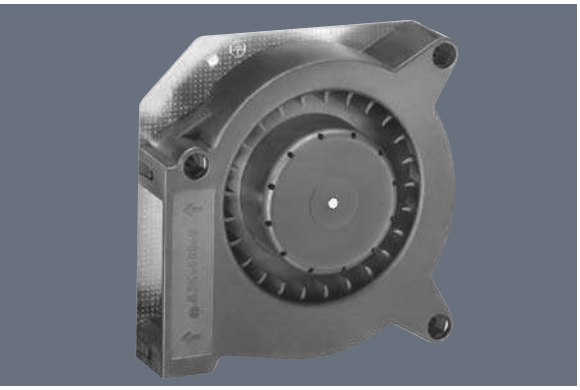

Highlights:

- Optional Vario-Pro: Highly adaptable software configuration of the fan enables a tailor-made solution to the specific requirements of your applications.
- Forward curved impeller.

General characteristics:

- Fibreglass-reinforced plastic scroll housing and impeller; Housing base of steel plate.
- Fully integrated electronic commutation.
- Protected against reverse polarity and locking.
- Direction of air flow: axial air intake, centrifugal air exhaust out of the outlet.
- Connection via single strands AWG 22, TR 64. Bared and tin-plated.
- Mass: 420 g.

Nominal data	Air flow	Air flow	Nominal voltage	Voltage range	Sound power level	Sintec sleeve bearings / Ball bearings	Power input	Nominal speed	Temperature range	Service life L_{10} (40 °C) ebm-papst Standard	Service life L_{10} (T_{max}) ebm-papst Standard	Life expectancy L_{10} (40 °C) see P. 15	Curve	Specials
Type	m^3/h	CFM	VDC	VDC	Bel(A)	□ / ■	Watts	RPM	°C	Hours		Hours	P. 110	
RL 90-18/12 N	40	23,5	**12**	7...15	5,8	■	5,5	2 500	-30...+75	62 500 / 27 500		112 500	1	/2
RL 90-18/14 NG	40	23,5	**24**	12...28	5,8	▪	5,0	2 500	-10...+75	62 500 / 27 500		112 500	1	
RL 90-18/14 N	40	23,5	**24**	12...28	5,8	■	5,0	2 500	-30...+75	62 500 / 27 500		112 500	1	/2
RL 90-18/18 NH	55	32,4	**48**	40...53	6,9	■	15,0	3 500	-30...+55	32 500 / 22 500		62 500	2	

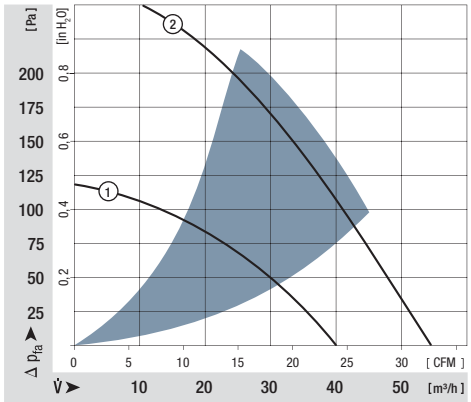

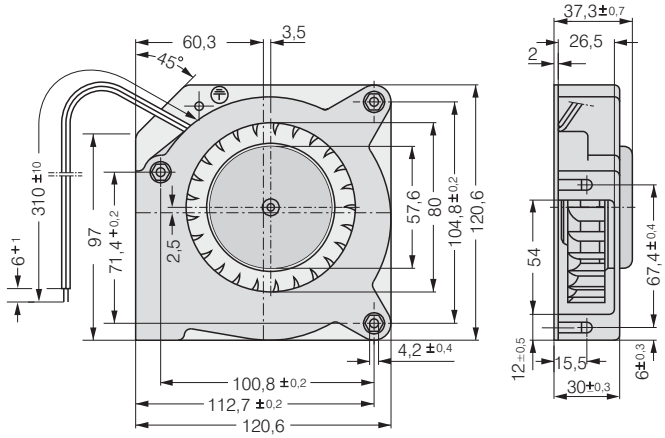

Screw clip M4 or 8-32UNC. Screw-in depth max. 12.5 min. 9.0

max. 80 m^3/h

DC centrifugal fans

Series RLF 100 127 x 127 x 25 mm

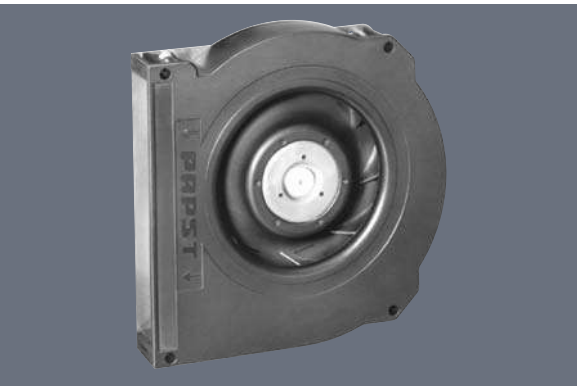

Highlights:

- Very flat and powerful centrifugal fan. Pressure-optimised blower.
- Optional Vario-Pro: Highly adaptable software configuration of the fan enables a tailor-made solution to the specific requirements of your applications.
- Some models available as standard with PWM control input and speed signal.
- Backward curved impeller.

General characteristics:

- Fibreglass-reinforced plastic scroll housing and impeller. Housing base of galvanised steel plate.
- Fully integrated electronic commutation. Protected against reverse polarity and locking.
- Direction of air flow: axial air intake, centrifugal air exhaust out of the outlet.
- Connection via single strands AWG 22, TR 64. Bared and tin-plated.
- Mass: 320 g.

Nominal data	Air flow	Air flow	Nominal voltage	Voltage range	Sound power level	Sintec sleeve bearings / Ball bearings	Power input	Nominal speed	Temperature range	Service life L_{10} (40 °C) ebm-papst Standard	Service life L_{10} (T_{max}) ebm-papst Standard	Life expectancy $L_{10}\Delta$ (40 °C) see P. 15	Curve	Specials
Type	m^3/h	CFM	VDC	VDC	Bel(A)	□ / ■	Watts	RPM	°C	Hours		Hours	P. 110/116	
RLF 100-11/12	64	37,7	**12**	8...15	6,4	■	8,0	5 100	-20...+75	80 000 / 30 000		150 000	1	/2
RLF 100-11/14	64	37,7	**24**	16...30	6,4	■	8,0	5 100	-20...+75	80 000 / 30 000		150 000	1	/19
RLF 100-11/18	64	37,7	**48**	36...60	6,4	■	8,6	5 100	-20...+75	80 000 / 30 000		150 000	1	
High speed models with Open Collector Tacho and PWM speed control.														
RLF 100-11/12/2HP-200	80	47,1	**12**	10...13,2	7,5	■	18,6	6 400	-20...+60	72 500 / 45 000		112 500	2	/2
RLF 100-11/18/2HP-182	80	47,1	**48**	43...53	7,5	■	17,0	6 400	-20...+70	72 500 / 35 000		112 500	2	/2

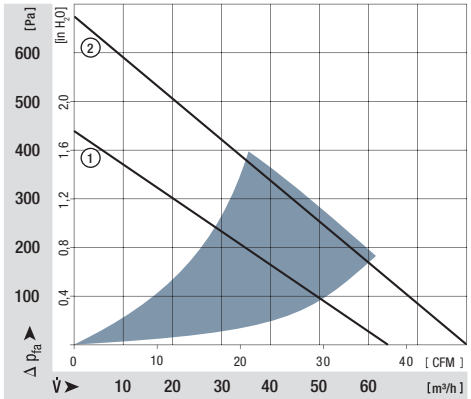

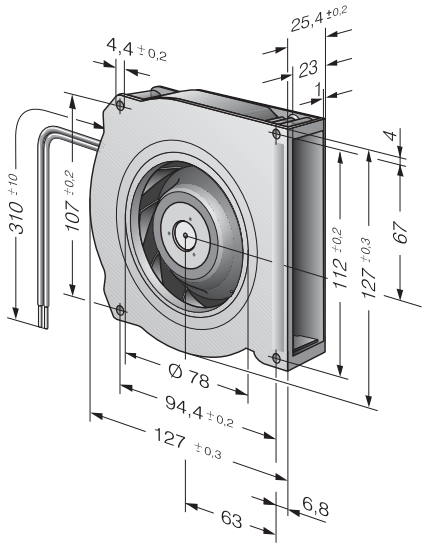

NG IT PWM A HP IP54

ebmpapst

max. 55 m^3/h

DC centrifugal fans

Series RG 90 N 135 x 135 x 38 mm

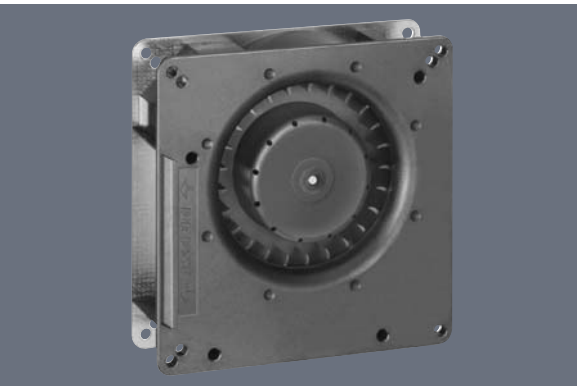

Highlights:

- Optional Vario-Pro: Highly adaptable software configuration of the fan enables a tailor-made solution to the specific requirements of your applications.
- Backward curved impeller.

General characteristics:

- Fibreglass-reinforced plastic scroll housing and impeller; Housing base of steel plate.
- Fully integrated electronic commutation.
- Protected against reverse polarity and locking.
- Direction of air flow: axial air intake, centrifugal air exhaust out of the outlet.
- Connection via single strands AWG 22, TR 64. Bared and tin-plated.
  48 V Model: Flat plug 6.3 x 0.8 mm for protective earth.
- Mass: 440 g.

Nominal data	Air flow	Air flow	Nominal voltage	Voltage range	Sound power level	Sintec sleeve bearings / Ball bearings	Power input	Nominal speed	Temperature range	Service life L_{10} (40 °C) ebm-papst Standard	Service life L_{10} (T_{max}) ebm-papst Standard	Life expectancy $L_{10\Delta}$ (40 °C) see P. 15	Curve	Specials
Type	m^3/h	CFM	VDC	VDC	Bel(A)	□ / ■	Watts	RPM	°C	Hours		Hours		
RG 90-18/12 N	55	32,4	**12**	7...15	5,5	■	6,0	2 200	-30...+75	62 500 / 27 500		112 500	1	
RG 90-18/14 NG	55	32,4	**24**	12...28	5,5	▪	5,5	2 200	-10...+75	62 500 / 27 500		112 500	1	
RG 90-18/14 N	55	32,4	**24**	12...28	5,5	■	5,5	2 200	-30...+75	62 500 / 27 500		112 500	1	
RG 90-18/18 N	55	32,4	**48**	36...56	5,5	■	5,5	2 200	-30...+75	62 500 / 27 500		112 500	1	

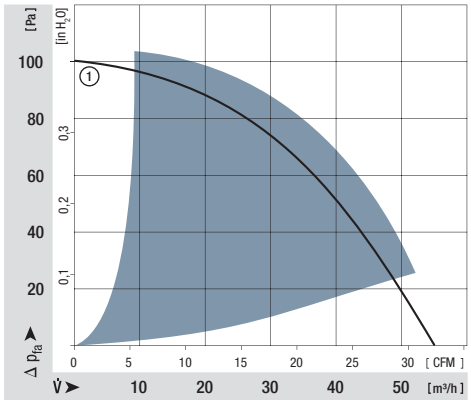

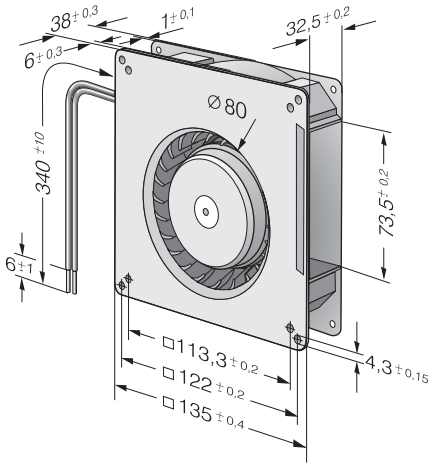

max. 137 m^3/h

DC centrifugal fans

Series RG 125 N 180 x 180 x 40 mm

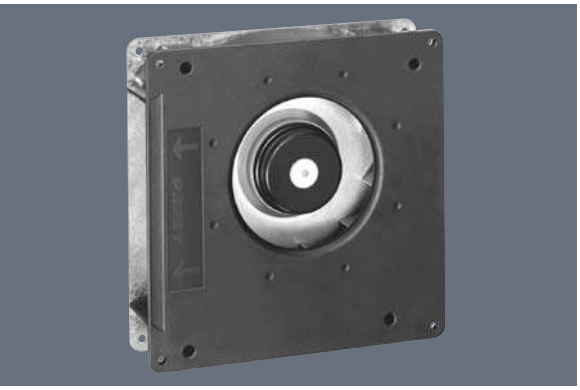

Highlights:

- Optional Vario-Pro: Highly adaptable software configuration of the fan enables a tailor-made solution to the specific requirements of your applications.
- Backward curved impeller.

General characteristics:

- Fibreglass-reinforced plastic scroll housing and impeller; Housing base of steel plate.
- Fully integrated electronic commutation.
- Protected against reverse polarity and locking.
- Direction of air flow: axial air intake, centrifugal air exhaust out of the outlet.
- Connection via single strands AWG 22, TR 64. Bared and tin-plated.
  48 V Model: Flat plug 6.3 x 0.8 mm for protective earth.
- Mass: 730 g.

Nominal data	Air flow	Air flow	Nominal voltage	Voltage range	Sound power level	Sintec sleeve bearings / Ball bearings	Power input	Nominal speed	Temperature range	Service life L_{10} (40 °C) ebm-papst Standard	Service life L_{10} (T_{max}) ebm-papst Standard	Life expectancy L_{10} (40 °C) see P. 15	Curve	Specials
Type	m^3/h	CFM	VDC	VDC	Bel(A)	□/■	Watts	RPM	°C	Hours		Hours	P. 110/112	
RG 125-19/12 NM	60,0	35,3	**12**	7...15	4,8	■	2,0	1 750	-30...+75	70 000 / 30 000		135 000	1	
RG 125-19/12 N	87,5	51,5	**12**	7...15	5,8	■	5,0	2 550	-30...+75	62 500 / 27 500		125 000	2	/2/12
RG 125-19/14 NM	60,0	35,3	**24**	12...28	4,8	■	2,0	1 750	-30...+75	70 000 / 30 000		135 000	1	
RG 125-19/14 N	87,5	51,5	**24**	12...28	5,8	■	5,0	2 550	-30...+75	62 500 / 27 500		125 000	2	/2
RG 125-19/18 N	87,5	51,5	**48**	36...56	5,8	■	5,0	2 550	-30...+75	62 500 / 27 500		125 000	2	
RG 125-19/18 NH	137	80,6	**48**	36...56	7,0	■	19,0	4 000	-20...+70	55 000 / 27 500		110 000	3	

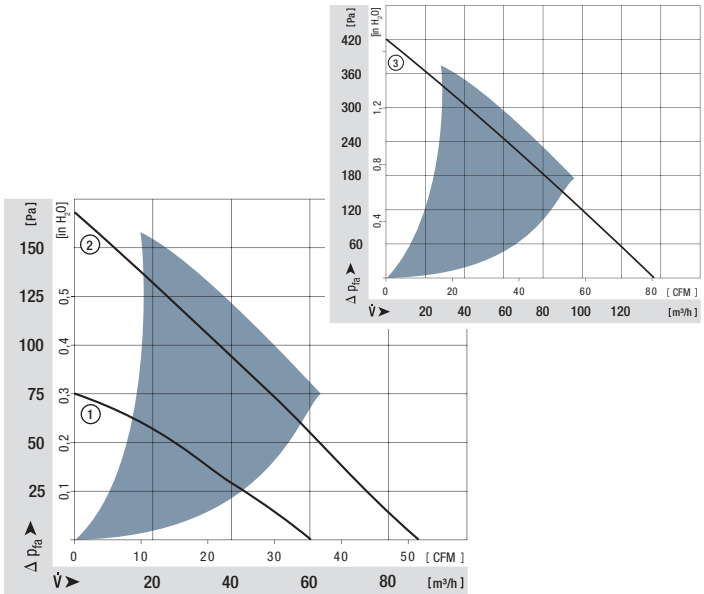

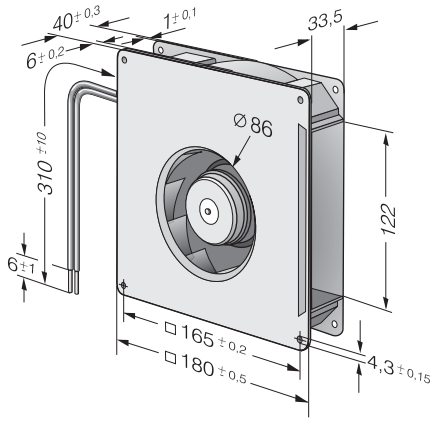

ebmpapst

max. 209 m^3/h

DC centrifugal fans

Series RG 160 N 220 x 220 x 56 mm

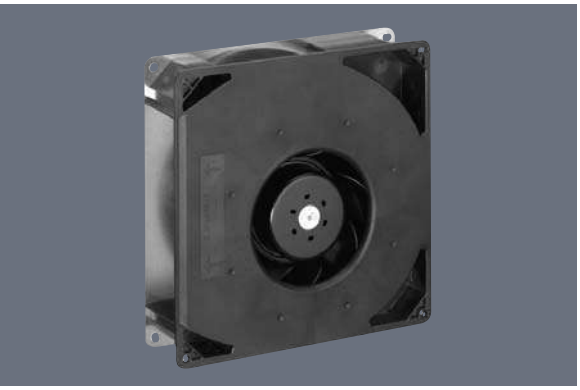

Highlights:

- Optional Vario-Pro: Highly adaptable software configuration of the fan enables a tailor-made solution to the specific requirements of your applications.
- Backward curved impeller.

General characteristics:

- Fibreglass-reinforced plastic scroll housing and impeller; Housing base of steel plate.
- Fully integrated electronic commutation.
- Protected against reverse polarity and locking.
- Direction of air flow: axial air intake, centrifugal air exhaust out of the outlet.
- Connection via single strands AWG 22, TR 64. Bared and tin-plated.
- 48 V Model: Flat plug 6.3 x 0.8 mm for protective earth.
- Mass: 1.4 kg.

Nominal data	Air flow	Air flow	Nominal voltage	Voltage range	Sound power level	Sintec sleeve bearings / Ball bearings	Power input	Nominal speed	Temperature range	Service life L_{10} (40 °C) ebm-papst Standard	Service life L_{10} (T_{max}) ebm-papst Standard	Life expectancy $L_{10\Delta}$ (40 °C) see P. 15	Curve	Specials
Type	m^3/h	CFM	VDC	VDC	Bel(A)	□ / ■	Watts	RPM	°C	Hours		Hours		P. 112
RG 160-28/12 NM	139	81,1	**12**	7...14	5,6	■	7,5	1 900	-20...+70	80 000 / 40 000		160 000	1	
RG 160-28/12 N	209	123,0	**12**	7,5...14	6,6	■	21,0	2 850	-20...+70	70 000 / 35 000		140 000	2	/12
RG 160-28/14 NM	139	81,1	**24**	12...28	5,6	■	7,0	1 900	-20...+70	80 000 / 40 000		120 000	1	
RG 160-28/14 N	209	123,0	**24**	12...28	6,6	■	20,0	2 850	-20...+70	70 000 / 35 000		120 000	2	
RG 160-28/18 N	209	123,0	**48**	28...60	6,6	■	20,0	2 850	-20...+70	70 000 / 35 000		120 000	2	/12

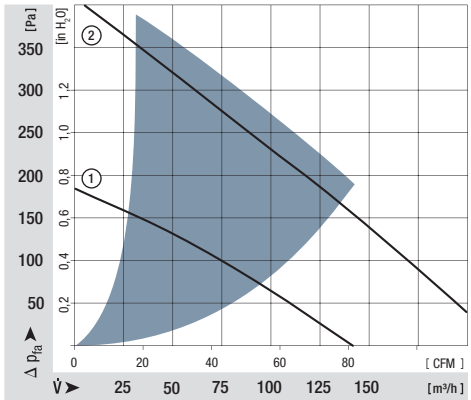

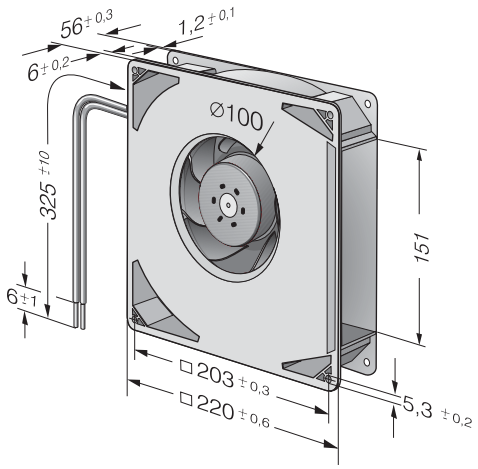

max. 444 m^3/h

DC centrifugal fans

Series RG 160 NTD 220 x 220 x 56 mm

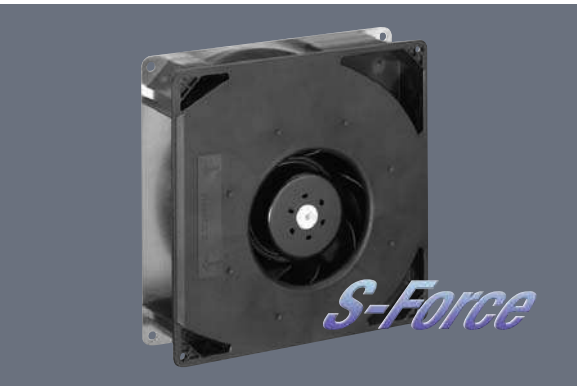

Highlights:

- Control inputs, alarm and speed signals available on request.
- 3-phase fan drive with high degree of running smoothness.
- Very high pressure build-up.
- Backward curved impeller.

General characteristics:

- Fibreglass-reinforced plastic scroll housing and impeller; Housing base of sheet steel.
- Fully integrated electronic commutation.
- Direction of air flow: axial air intake, centrifugal air exhaust out of the outlet.
- Connection via single strands AWG 22, TR 64. Bared and tin-plated. 48 V Model: Flat plug 6.3 x 0.8 mm for protective earth.
- Mass: 1.4 kg.

	Nominal data	Air flow	Air flow	Nominal voltage	Voltage range	Sound power level	Sintec sleeve bearings / Ball bearings	Power input	Nominal speed	Temperature range	Service life L_{10} (40 °C) ebm-papst Standard	Service life L_{10} (T_{max}) ebm-papst Standard	Life expectancy $L_{10\Delta}$ (40 °C) see P. 15	Curve	Specials
	Type	m^3/h	CFM	VDC	VDC	Bel(A)	□/■	Watts	RPM	°C	Hours		Hours	P.	
min.	RG 160-28/14 NTD...	59	16,4	24	16...28	—	■	2,0	800	-20...+60	55 000 / 27 500		110 000	1	
max.		308	85,6			7,5		64,0	4 200					2	
	RG 160-28/14 NTD	308	85,6	24	16...28	7,5	■	64,0	4 200	-20...+60	55 000 / 35 000		110 000	2	
	RG 160-28/14 NTDH	370	217,8	24	16...28	7,8	■	101,0	5 000	-20...+60	50 000 / 32 500		102 500	3	
min.	RG 160-28/18 NTD...	59	16,4	48	38...57	—	■	2,0	800	-20...+70	55 000 / 27 500		110 000	1	
max.		308	85,6			7,5		59,0	4 200					2	
NEW	RG 160-28/18/ 2NTDHHP*	444	261,2	48	36...60	8,5	■	159	6 000	-20...+65	40 000 / 22 500		80 000	4	

Models RG 160-28/14 NTD... and RG 160-28/18 NTD... are available in customer-specific, custom-developed variants only.
The data specified here are technically feasible benchmark values. The fans can be specially adapted to your application with signal outputs and control inputs.
*The specific service life is valid when an external capacitor is wired between the plus and minus strands.
Please note the wiring suggestion.

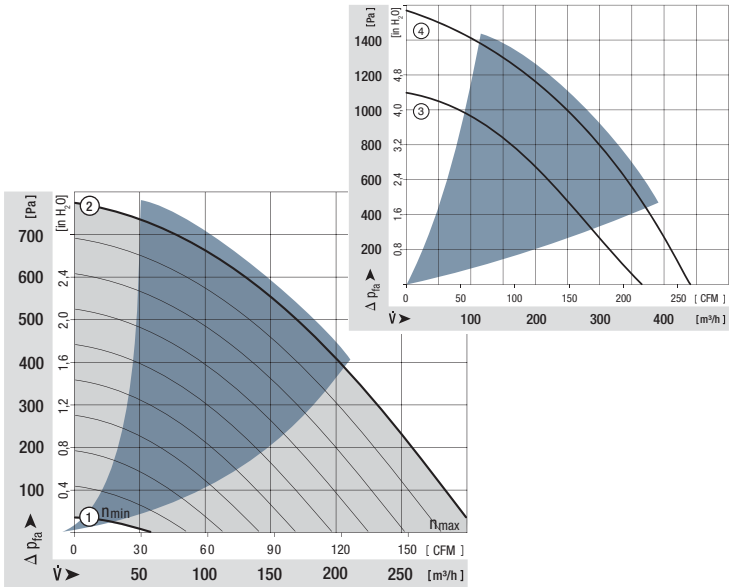

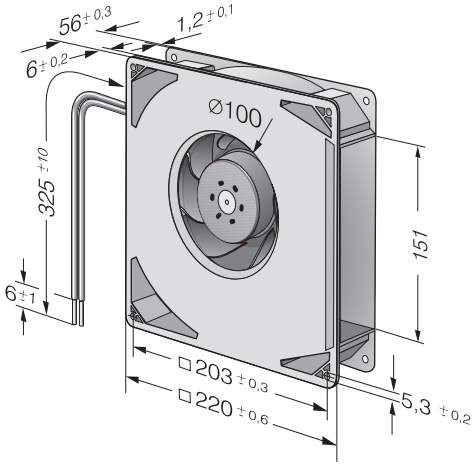

ebmpapst

max. 930 m^3/h

DC centrifugal fans

Series RG 190 TD 225 x 225 x 85 mm

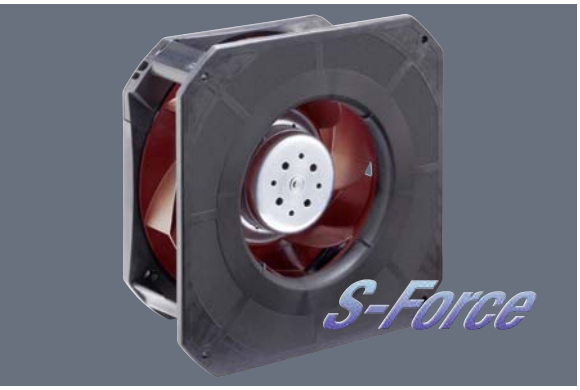

Highlights:

- 3-phase fan drive with high degree of running smoothness. Very high pressure build-up.
- Backward-curved RadiCal impeller with high efficiency.
- Standard models available with multifunctional control input for analogue, PWM and speed sign.
- Compact design with integrated mounting plate and optimised inlet nozzle.

General characteristics:

- Housing and impeller of fibreglass-reinforced plastic.
- Fully integrated electronic commutation.
- Direction of rotation: CW seen on rotor.
- Direction of air flow: axial air intake, centrifugal air exhaust out of the outlet.
- Connection via single strands AWG 18, 20 or AWG 22, TR 64, speed signal and control input AWG 22, bared and tin-plated.
- Mass: 1210 g.

	Nominal data	Air flow	Air flow	Nominal voltage	Voltage range	Sound power level	Sintec sleeve bearings / Ball bearings	Power input	Nominal speed	Temperature range	Service life L_{10} (40 °C) ebm-papst Standard	Service life L_{10} (T_{max}) ebm-papst Standard	Life expectancy $L_{10\Delta}$ (40 °C) see P. 15	Curve	Specials
	Type	m^3/h	CFM	VDC	VDC	Bel(A)	□ / ■	Watts	RPM	°C	Hours		Hours		
NEW	RG 190-39/14/2 TDMLO	630	370,6	**24**	16...30	7,6	■	54	3 000	-20...+60	55 000 / 35 000		110 000	1	
NEW	RG 190-39/14/2 TDMO	820	482,4	**24**	16...36	7,9	■	100	3 900	-20...+65	52 500 / 30 000		105 000	2	
NEW	RG 190-39/18/2 TDMLO	630	370,6	**48**	36...57	7,6	■	52	3 000	-20...+65	55 000 / 35 000		110 000	1	
NEW	RG 190-39/18/2 TDMO	820	482,4	**48**	36...72	7,9	■	100	3 900	-20...+65	52 500 / 30 000		105 000	2	
NEW	RG 190-39/18/2 TDO	930	547,1	**48**	36...72	8,3	■	135	4 400	-20...+65	40 000 / 25 000		80 000	3	

Speed control range from 800 rpm at 7 % PWM up to nominal speed at > 90 % PWM. Standstill at 0 % PWM, standstill if control cable is interrupted.

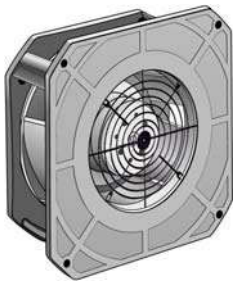

For suitable guard grilles, see page 176.

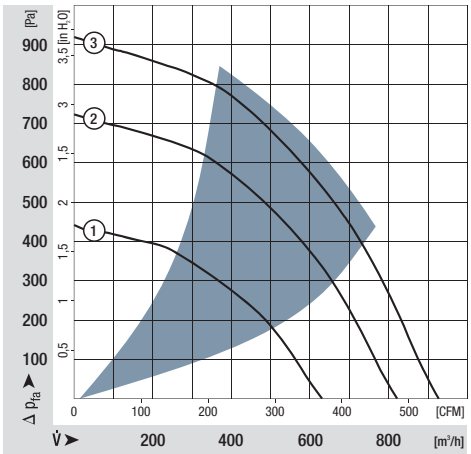

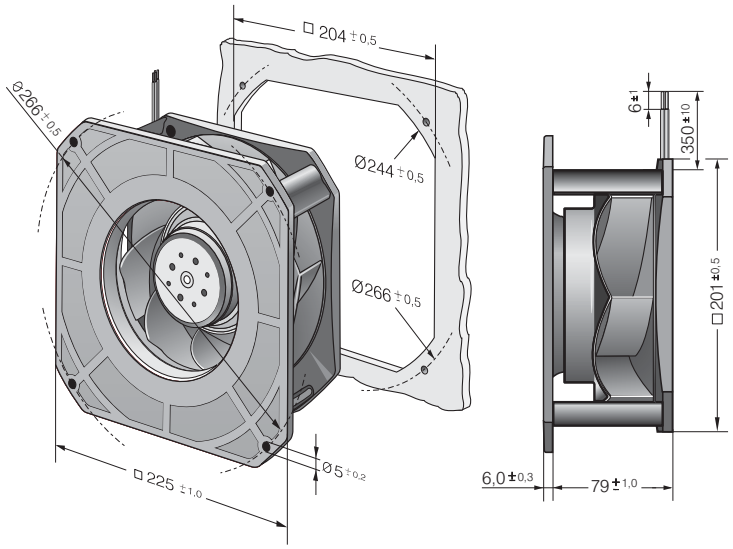

max. 1280 m^3/h

DC centrifugal fans

Series RG 220 TD 270 x 270 x 99 mm

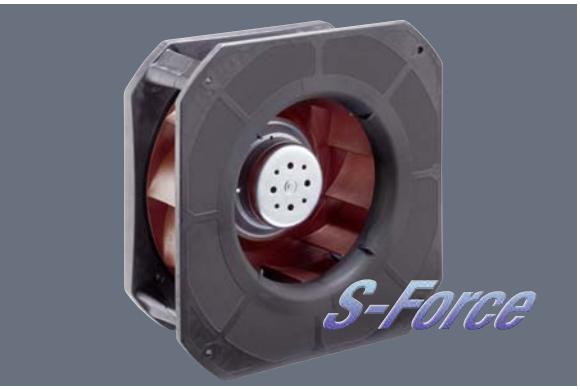

Highlights:
- 3-phase fan drive with high degree of running smoothness. Very high pressure build-up.
- Backward-curved impeller.
- Standard models available with multifunctional control input for analogue, PWM and speed signal.
- Compact design with integrated mounting plate and optimised inlet nozzle.

General characteristics:
- Housing and impeller of fibreglass-reinforced plastic.
- Fully integrated electronic commutation.
- Direction of rotation: CW seen on rotor.
- Direction of air flow: axial air intake, centrifugal air exhaust out of the outlet.
- Connection via single strands AWG 18, 20 or AWG 22, TR 64, speed signal and control input AWG 22, bared and tin-plated.
- Mass:1870 g.

	Nominal data	Air flow	Air flow	Nominal voltage	Voltage range	Sound power level	Sintec sleeve bearings Ball bearings	Power input	Nominal speed	Temperature range	Service life L_{10} (40 °C) ebm-papst Standard	Service life L_{10} (T_{max}) ebm-papst Standard	Life expectancy $L_{10\Delta}$ (40 °C) see P. 15	Curve	Specials
	Type	m^3/h	CFM	VDC	VDC	Bel(A)	□/■	Watts	RPM	°C	Hours		Hours		
NEW	RG 220-44/14/2TDMO	1090	641,2	**24**	16...36	7,7	■	82	3 000	-20...+55	75 000 / 52 500		150 000	1	
NEW	RG 220-44/18/2TDMO	1090	641,2	**48**	36...72	7,7	■	80	3 000	-20...+55	75 000 / 52 500		150 000	1	
NEW	RG 220-44/18/2TDO	1280	752,9	**48**	36...72	8,0	■	140	3 500	-20...+55	55 000 / 40 000		110 000	2	

Speed control range from 800 rpm at 7 % PWM up to nominal speed at > 90 % PWM. Standstill at 0 % PWM, standstill if control cable is interrupted.



For suitable guard grilles, see page 176.

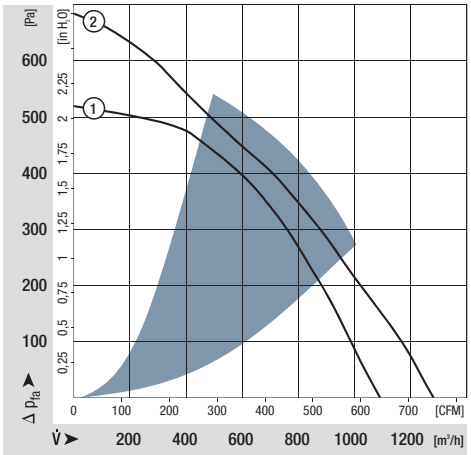

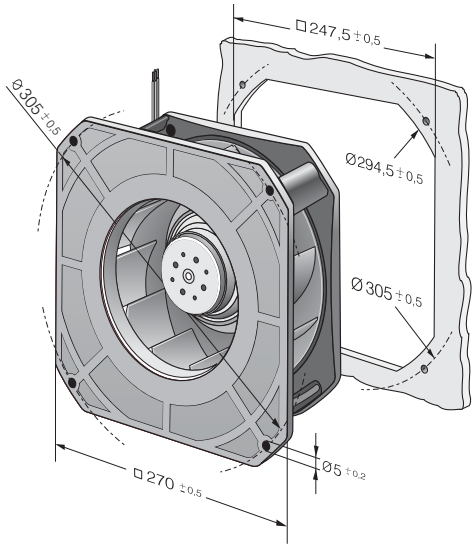

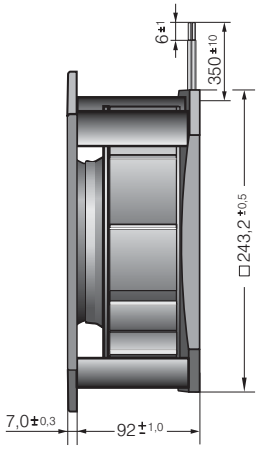

ebmpapst

max. 1210 m^3/h

DC centrifugal fans

Series RG 225 TD 270 x 270 x 119 mm

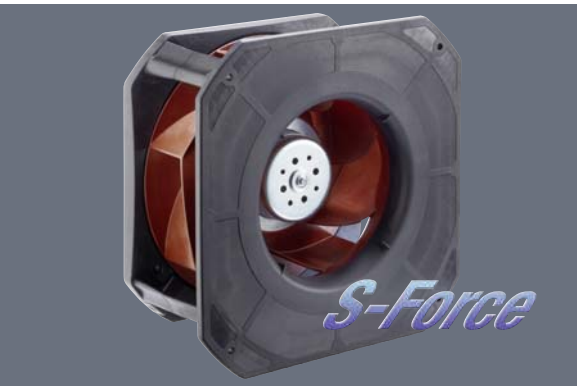

Highlights:
- 3-phase fan drive with high degree of running smoothness. Very high pressure build-up.
- Backward-curved RadiCal impeller with high efficiency.
- Standard models available with multifunctional control input for analogue, PWM and speed sign.
- Compact design with integrated mounting plate and optimised inlet nozzle.

General characteristics:
- Housing and impeller of fibreglass-reinforced plastic.
- Fully integrated electronic commutation.
- Direction of rotation: CW seen on rotor.
- Direction of air flow: axial air intake, centrifugal air exhaust out of the outlet.
- Connection via single strands AWG 18, 20 or AWG 22, TR 64, speed signal and control input AWG 22, bared and tin-plated.
- Mass:1750 g.

Nominal data		Air flow	Air flow	Nominal voltage	Voltage range	Sound power level	Sintec sleeve bearings / Ball bearings	Power input	Nominal speed	Temperature range	Service life L_{10} (40 °C) ebm-papst Standard	Service life L_{10} (T_{max}) ebm-papst Standard	Life expectancy $L_{10\Delta}$ (40 °C) see P. 15	Curve	Specials
	Type	m^3/h	CFM	VDC	VDC	Bel(A)	□ / ■	Watts	RPM	°C	Hours		Hours		
NEW	RG 225-55/14/2TDML0	1040	611,8	**24**	16...36	7,3	■	65	2 400	-20...+55	72 500 / 52 500		145 000	1	
NEW	RG 225-55/18/2TDML0	1040	611,8	**48**	36...72	7,3	■	65	2 400	-20...+55	72 500 / 52 500		145 000	1	
NEW	RG 225-55/18/2TDM0	1210	711,8	**48**	36...72	7,9	■	116	2 800	-20...+55	55 000 / 40 000		110 000	2	

Speed control range from 800 rpm at 7 % PWM up to nominal speed at > 90 % PWM. Standstill at 0 % PWM, standstill if control cable is interrupted.
The specific service life is valid when an external capacitor is wired between the plus and minus strands.
Please note the wiring suggestion.

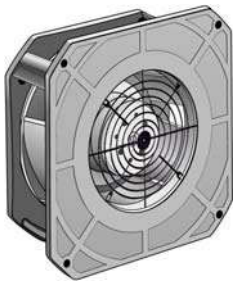

For suitable guard grilles, see page 176.

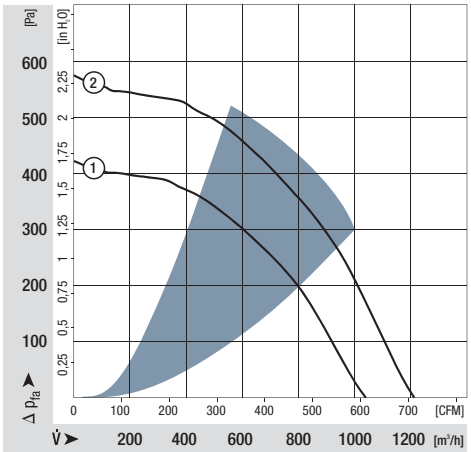

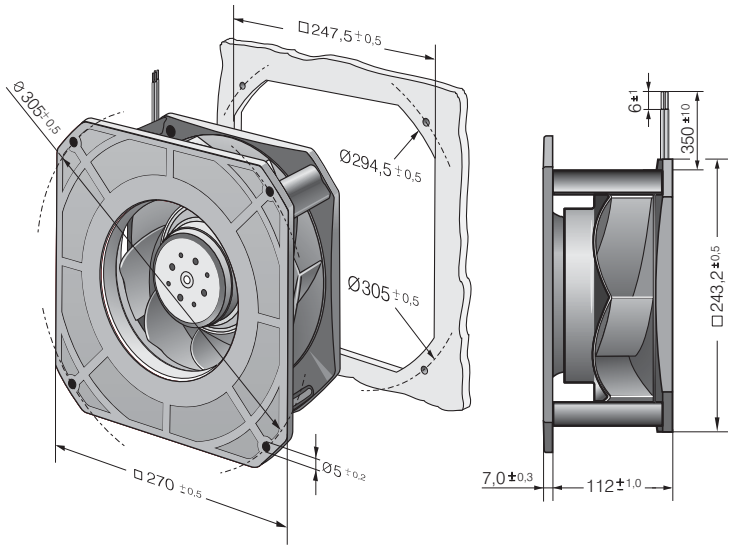

max. 220 m^3/h

DC centrifugal fans

Series RET 97 TD 97 Ø x 41 mm

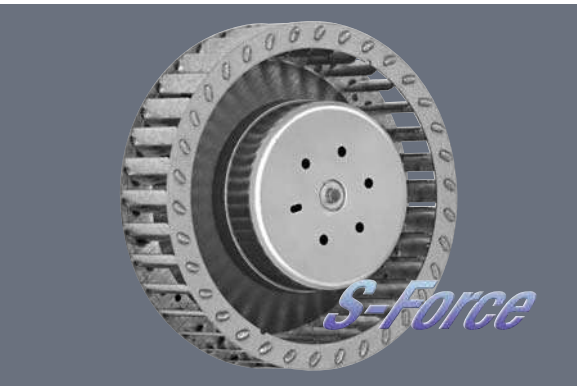

Highlights:
- 3-phase fan drive with high degree of running smoothness.
- Very high pressure build-up.
- Forward curved impeller.
- Available as standard with PWM control input and speed signal. Additional inputs and outputs on request.

General characteristics:
- Impeller of galvanised steel plate.
- Fully integrated electronic commutation.
- Direction of rotation: CW seen on rotor.
- Direction of air flow: axial air intake, centrifugal air exhaust out of the outlet.
- Connection via single strands AWG 22, TR 64. Bared and tin-plated.
- Mass: 430 g.

Nominal data		Air flow	Air flow	Nominal voltage	Voltage range	Sound power level	Sintec sleeve bearings / Ball bearings	Power input	Nominal speed	Temperature range	Service life L_{10} (40 °C) ebm-papst Standard / Service life L_{10} (T_{max}) ebm-papst Standard	Life expectancy $L_{10\Delta}$ (40 °C) see P. 15	Curve	Specials
	Type	m^3/h	CFM	VDC	VDC	Bel(A)	□/■	Watts	RPM	°C	Hours	Hours		
NEW	RET 97-25/14/2TDP*	220	129	**24**	16...36	8,1	■	72	6 000	-20...+60	80 000 / 50 000	160 000	1	
NEW	RET 97-25/18/2TDP	220	129	**48**	36...60	8,1	■	72	6 000	-20...+60	80 000 / 50 000	160 000	1	

* Preliminary

Speed control range from 800 rpm at 7 % PWM up to nominal speed at > 90 % PWM. Standstill at 0 % PWM, maximum speed at sensor break.
To attain the specified service life, an external capacitor must be wired between the plus and minus strands.
Please note the wiring suggestion on page.

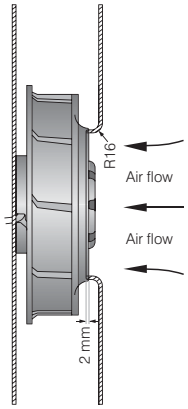

The air flow and noise level of fans without external housing depends on the installation conditions. The stated air flow and noise levels have been measured under the following conditions:
Centrifugal fan mounted on a base plate 116 x 116 mm.
Cover plate 116 x 116 mm with an air inlet of Ø 80 mm, concentric to the impeller.

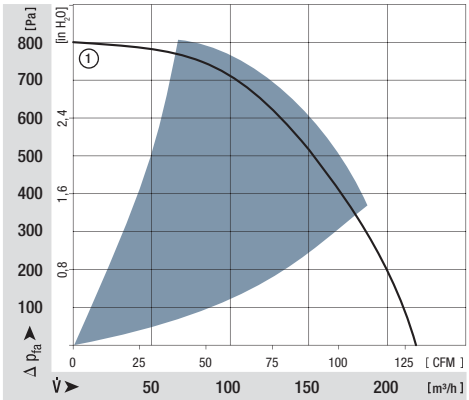

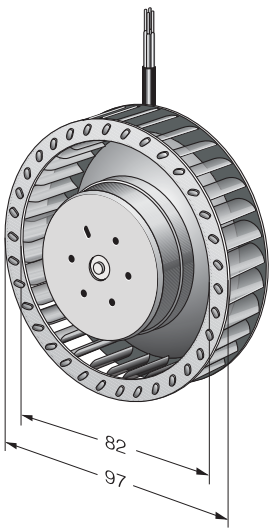

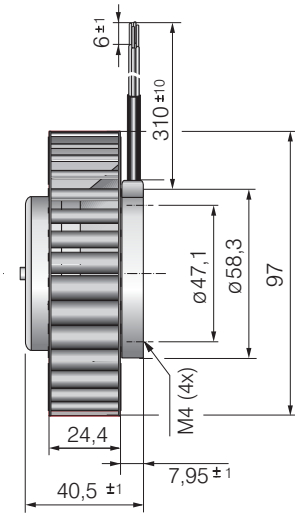

ebmpapst

max. 104 m^3/h

DC centrifugal fans

Series REF 100 104 Ø x 25 mm



Highlights:

- Pressure-optimised blower.
- Very flat and powerful centrifugal fan.
- Optional Vario-Pro: Highly adaptable software configuration of the fan enables a tailor-made solution to the specific requirements of your applications.
- Backward curved impeller.

General characteristics:

- Fibreglass-reinforced plastic scroll housing and impeller.
- Fully integrated electronic commutation.
- Protected against reverse polarity and locking.
- Direction of air flow radial, direction of rotation clockwise, seen on rotor.
- Connection via single strands AWG 22, TR 64. Bared and tin-plated.
- Mass: 160 g

Nominal data	Air flow	Air flow	Nominal voltage	Voltage range	Sound power level	Sintec sleeve bearings / Ball bearings	Power input	Nominal speed	Temperature range	Service life L_{10} (40 °C) ebm-papst Standard	Service life L_{10} (T_{max}) ebm-papst Standard	Life expectancy $L_{10\Delta}$ (40 °C) see P. 15	Curve	Specials
Type	m^3/h	CFM	VDC	VDC	Bel(A)	□ / ■	Watts	RPM	°C	Hours		Hours	P. 110	
REF 100-11/12	86	50,6	**12**	8...15	6,3	■	7,5	5 400	-20...+75	80 000 / 30 000		135 000	1	/2
REF 100-11/14	86	50,6	**24**	16...30	6,3	■	7,5	5 400	-20...+75	80 000 / 30 000		135 000	1	/2
REF 100-11/18	86	50,6	**48**	36...60	6,3	■	7,5	5 400	-20...+75	80 000 / 30 000		135 000	1	/2
REF 100-11/18 H	104	61,2	**48**	36...56	6,9	■	14,8	6 700	-20...+70	67 500 / 30 000		120 000	2	

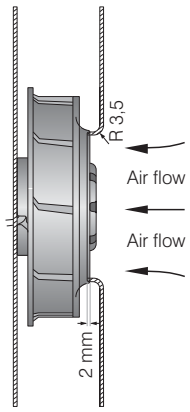

The air flow and noise level of fans without external housing depends on the installation conditions. The stated air flow and noise levels have been measured under the following conditions:
Centrifugal fan mounted on a base plate 127 x 127 mm. Cover plate 127 x 127 mm with an air inlet of Ø 70 mm, concentric to the impeller.

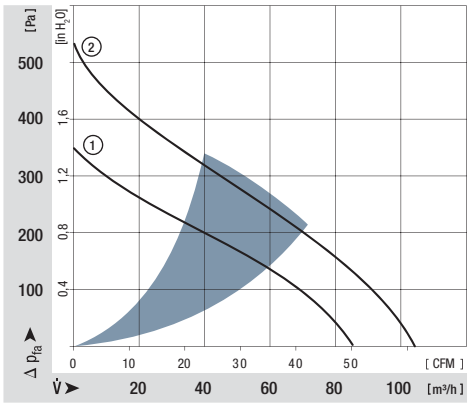

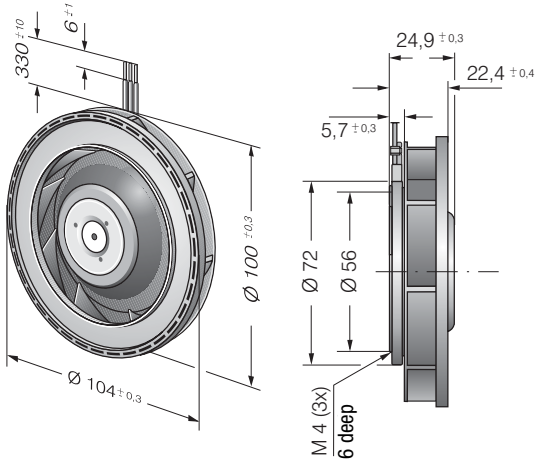

max. 190 m^3/h

DC centrifugal fans

Series RER 101 101 Ø x 52 mm



Highlights:

- Optional Vario-Pro: Highly adaptable software configuration of the fan enables a tailor-made solution to the specific requirements of your applications.
- Backward curved impeller.

General characteristics:

- Fibreglass-reinforced plastic scroll housing and impeller.
- Fully integrated electronic commutation.
- Protected against reverse polarity and locking.
- Direction of air flow radial, direction of rotation clockwise, seen on rotor.
- Connection via single strands AWG 22, TR 64. Bared and tin-plated.
- Mass: 305 g.

Nominal data	Air flow	Air flow	Nominal voltage	Voltage range	Sound power level	Sintec sleeve bearings / Ball bearings	Power input	Nominal speed	Temperature range	Service life L_{10} (40 °C) ebm-papst Standard	Service life L_{10} (T_{max}) ebm-papst Standard	Life expectancy $L_{10\Delta}$ (40 °C) see P. 15	Curve	Specials
Type	**m^3/h**	**CFM**	**VDC**	**VDC**	**Bel(A)**	**□/■**	**Watts**	**RPM**	**°C**	**Hours**		**Hours**	**P. 116**	
RER 101-36/12NHH	190	111,8	**12**	9..13,6	7,2	■	20,5	5 900	-20...+70	60 000 / 30 000		120 000	1	
RER 101-36/14NHH	190	111,8	**24**	18..27,2	7,2	■	20,0	5 900	-20...+70	60 000 / 30 000		120 000	1	
RER 101-36/18NHH	190	111,8	**48**	43...52	7,2	■	19,0	5 900	-20...+70	60 000 / 30 000		120 000	1	/19

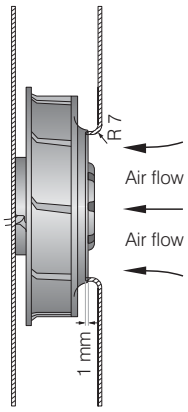

The air flow and noise level of fans without external housing depends on the installation conditions. The stated air flow and noise levels have been measured under the following conditions:
Centrifugal fan mounted on a base plate 148 x 148 mm. Cover plate 148 x 148 mm with an air inlet of Ø 66 mm, concentric to the impeller.

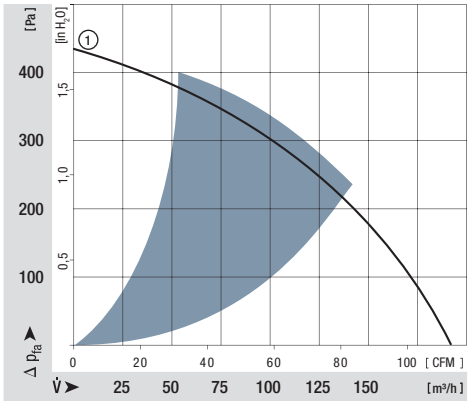

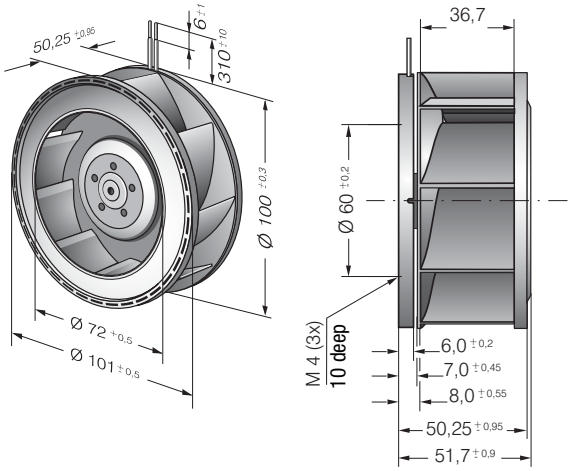

ebmpapst

max. 390 m³/h

DC centrifugal fans

Series RER 120 TD 120 Ø x 54 mm



Highlights:
- 3-phase fan drive with high degree of running smoothness.
- Very high pressure build-up.
- Backward curved impeller.
- Available as standard with PWM control input and speed signal. Additional inputs and outputs on request.

General characteristics:
- Impeller of fibreglass-reinforced plastic.
- Fully integrated electronic commutation.
- Direction of rotation: CW seen on rotor.
- Direction of air flow: axial air intake, centrifugal air exhaust out of the outlet.
- Connection via single strands AWG 22, TR 64. Bared and tin-plated.
- Mass: 430 g.

Nominal data		Air flow	Air flow	Nominal voltage	Voltage range	Sound power level	Sintec sleeve bearings / Ball bearings	Power input	Nominal speed	Temperature range	Service life L_{10} (40 °C) ebm-papst Standard	Service life L_{10} (T_{max}) ebm-papst Standard	Life expectancy $L_{10\Delta}$ (40 °C) see P. 15	Curve	Specials
	Type	m³/h	CFM	VDC	VDC	Bel(A)	□ / ■	Watts	RPM	°C	Hours		Hours		
NEW	RER 120-26/14/2 TDMP*	320	188,2	**24**	16...32	tbd	■	51	5 200	-20...+60	60 000 / 37 500		120 000	1	
NEW	RER 120-26/14/2 TDP	377	221,9	**24**	16...32	8,2	■	78	6 100	-20...+60	55 000 / 35 000		110 000	2	
NEW	RER 120-26/18/2 TDMP*	320	188,2	**48**	36...60	tbd	■	51	5 200	-20...+60	57 500 / 35 000		115 000	1	
NEW	RER 120-26/18/2 TDP	390	229,5	**48**	36...60	8,3	■	92	6 300	-20...+60	50 000 / 30 000		100 000	3	

*Preliminary

Speed control range from 800 rpm at 7 % PWM up to nominal speed at > 90 % PWM. Standstill at 0 % PWM, max. speed if control cable is interrupted.
The specific service life is valid when an external capacitor is wired between the plus and minus strands. Please note the wiring suggestion.

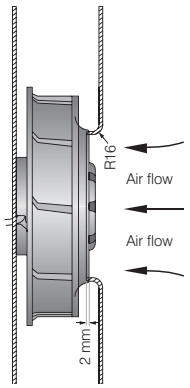

The air flow and noise level of fans without external housing depends on the installation conditions. The stated air flow and noise levels have been measured under the following conditions:
Centrifugal fan mounted on a base plate 140 x 140 mm. Cover plate 140 x 140 mm with an air inlet of Ø 96 mm, concentric to the impeller.

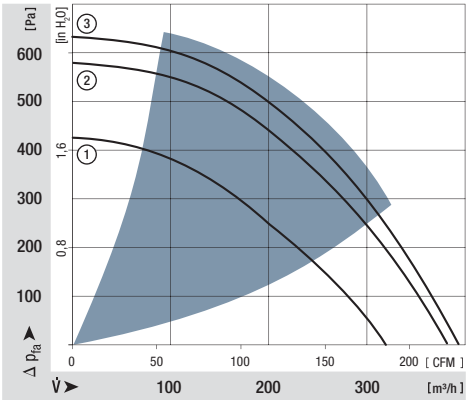

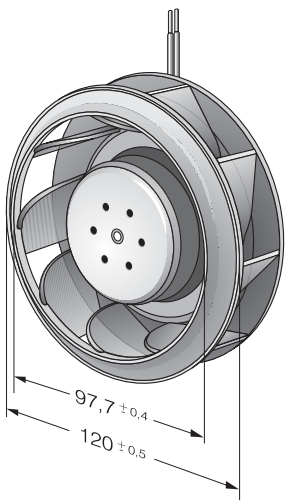

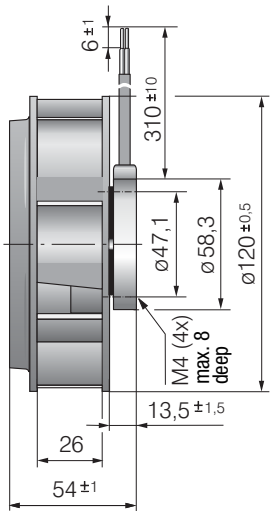

max. 166 m^3/h

DC centrifugal fans

Series RER 125 N 138 Ø x 35 mm



Highlights:

- Optional Vario-Pro: Highly adaptable software configuration of the fan enables a tailor-made solution to the specific requirements of your applications.
- Backward curved impeller.

General characteristics:

- Fibreglass-reinforced plastic scroll housing and impeller.
- Fully integrated electronic commutation.
- Protected against reverse polarity and locking.
- Direction of air flow radial, direction of rotation clockwise, seen on rotor.
- Connection via single strands AWG 22, TR 64. Bared and tin-plated.
- Mass: 320 g.

Nominal data	Air flow	Air flow	Nominal voltage	Voltage range	Sound power level	Sintec sleeve bearings / Ball bearings	Power input	Nominal speed	Temperature range	Service life L_{10} (40 °C) ebm-papst Standard / Service life L_{10} (T_{max}) ebm-papst Standard	Life expectancy $L_{10\Delta}$ (40 °C) see P. 15	Curve	Specials
Type	m^3/h	CFM	VDC	VDC	Bel(A)	□ / ■	Watts	RPM	°C	Hours	Hours	P. 112	
RER 125-19/12 N	110	64,7	**12**	7...15	5,7	■	4,5	2 650	-30...+75	62 500 / 27 500	125 000	1	/12
RER 125-19/14 N	110	64,7	**24**	12...28	5,7	■	4,5	2 650	-30...+75	62 500 / 27 500	125 000	1	
RER 125-19/14 NH	166	97,7	**24**	12...28	7,0	■	13,0	4 000	-20...+70	55 000 / 27 500	110 000	2	
RER 125-19/18 N	110	64,7	**48**	36...56	5,7	■	5,0	2 650	-30...+75	62 500 / 27 500	125 000	1	

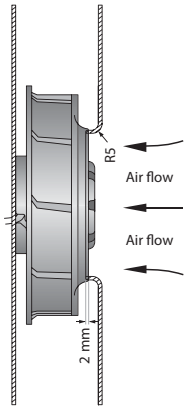

The air flow and noise level of fans without external housing depends on the installation conditions. The stated air flow and noise levels have been measured under the following conditions:
Centrifugal fan mounted on a base plate 220 x 220 mm. Cover plate 220 x 220 mm with an air inlet of Ø 86 mm, concentric to the impeller.

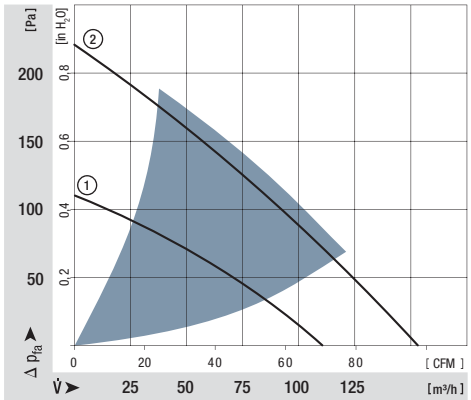

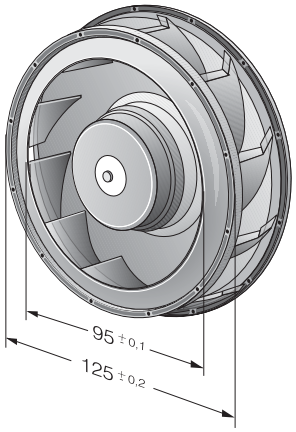

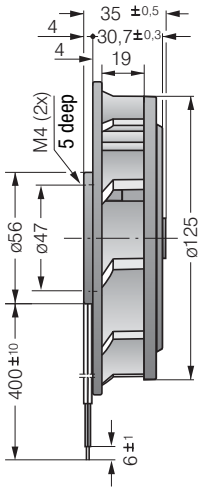

ebmpapst

max. 565 m^3/h

DC centrifugal fans

Series RER 133 TD 133 Ø x 91 mm



Highlights:
- 3-phase fan drive with high degree of running smoothness.
- Very high pressure build-up.
- Backward curved impeller.
- Available as standard with PWM control input and speed signal. Additional inputs and outputs on request.

General characteristics:
- Impeller of fibreglass-reinforced plastic.
- Fully integrated electronic commutation.
- Direction of rotation: CW seen on rotor.
- Direction of air flow: axial air intake, centrifugal air exhaust out of the outlet.
- Connection via single strands AWG 22, TR 64. Bared and tin-plated.
- Mass: 890 g.

Nominal data		Air flow	Air flow	Nominal voltage	Voltage range	Sound power level	Sintec sleeve bearings / Ball bearings	Power input	Nominal speed	Temperature range	Service life L_{10} (40 °C) ebm-papst Standard / Service life L_{10} (T_{max}) ebm-papst Standard	Life expectancy $L_{10\Delta}$ (40 °C) see P. 15	Curve	Specials
	Type	m^3/h	CFM	VDC	VDC	Bel(A)	□/■	Watts	RPM	°C	Hours	Hours		
NEW	RER 133-41/14/2 TDMP	460	270,6	**24**	16...30	tbd	■	53	5 000	-20...+65	72 500 / 40 000	145 000	1	
NEW	RER 133-41/14/2 TDP*	565	332,4	**24**	16...36	tbd	■	90	6 000	-20...+65	70 000 / 37 500	140 000	2	
NEW	RER 133-41/18/2 TDMP*	460	270,6	**48**	36...57	tbd	■	50	5 000	-20...+65	72 500 / 40 000	145 000	1	
NEW	RER 133-41/18/2 TDP	565	332,4	**48**	36...72	8,2	■	87	6 000	-20...+65	70 000 / 37 500	140 000	2	

*Preliminary

Speed control range from 800 rpm at 7 % PWM up to nominal speed at > 90 % PWM. Standstill at 0 % PWM, max. speed if control cable is interrupted.

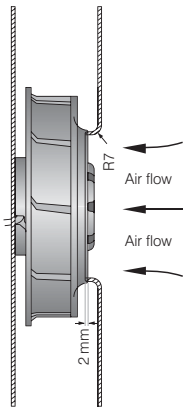

The air flow and noise level of fans without external housing depends on the installation conditions. The stated air flow and noise levels have been measured under the following conditions:
Centrifugal fan mounted on a base plate 140 x 140 mm.
Cover plate 140 x 140 mm with an air inlet of Ø 87 mm, concentric to the impeller.

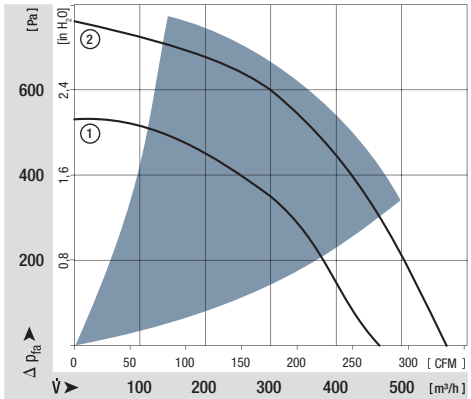

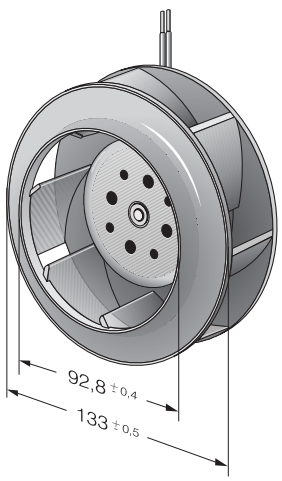

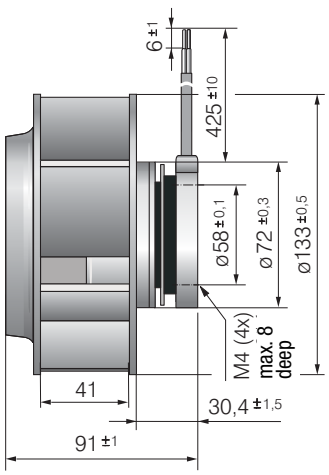

max. 255 m^3/h

DC centrifugal fans

Series RER 160 N 165 Ø x 51 mm

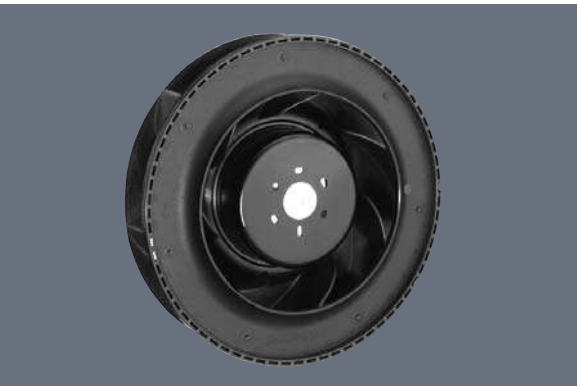

Highlights:

- Optional Vario-Pro: Highly adaptable software configuration of the fan enables a tailor-made solution to the specific requirements of your applications.
- Backward curved impeller.

General characteristics:

- Fibreglass-reinforced plastic scroll housing and impeller.
- Fully integrated electronic commutation.
- Protected against reverse polarity and locking.
- Direction of air flow radial, direction of rotation clockwise, seen on rotor.
- Connection via single strands AWG 22, TR 64. Bared and tin-plated.
- Mass: 590 g.

Nominal data	Air flow	Air flow	Nominal voltage	Voltage range	Sound power level	Sintec sleeve bearings / Ball bearings	Power input	Nominal speed	Temperature range	Service life L_{10} (40 °C) ebm-papst Standard	Service life L_{10} (T_{max}) ebm-papst Standard	Life expectancy $L_{10}\Delta$ (40 °C) see P. 15	Curve	Specials
Type	**m^3/h**	**CFM**	**VDC**	**VDC**	**Bel(A)**	**□/■**	**Watts**	**RPM**	**°C**	**Hours**		**Hours**	**P. 112**	
RER 160-28/12 N	255	150,1	**12**	7...14	6,4	■	19,0	3 000	-20...+70	75 000 / 35 000		140 000	1	/12
RER 160-28/14 N	255	150,1	**24**	12...28	6,4	■	19,0	3 000	-20...+70	75 000 / 35 000		140 000	1	
RER 160-28/18 N	255	150,1	**48**	28...60	6,4	■	19,0	3 000	-20...+70	75 000 / 35 000		140 000	1	/12

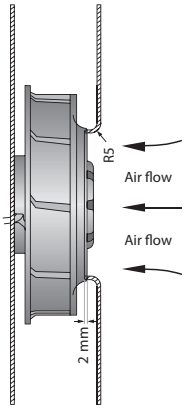

The air flow and noise level of fans without external housing depends on the installation conditions. The stated air flow and noise levels have been measured under the following conditions:
Centrifugal fan mounted on a base plate 260 x 260 mm.
Cover plate 260 x 260 mm with an air inlet of Ø 100 mm, concentric to the impeller.

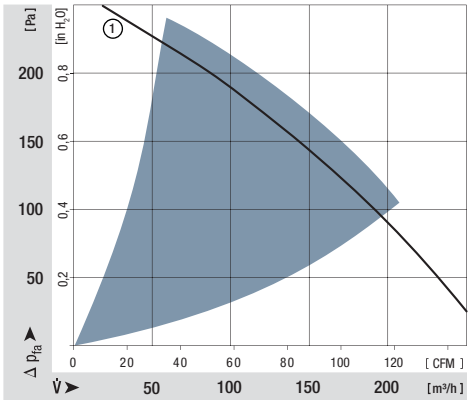

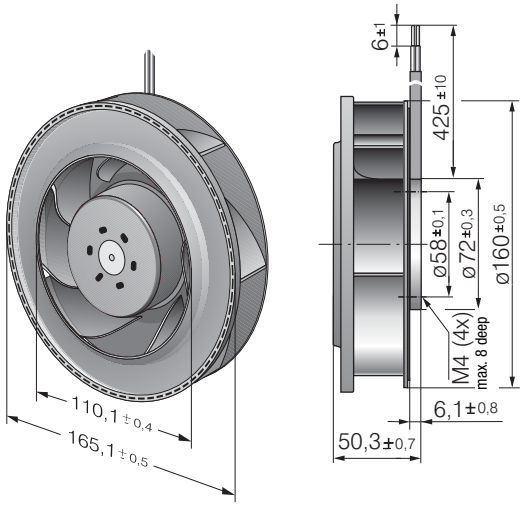

NG IT PWM A HP IP54 SP

ebmpapst

max. 505 m^3/h

DC centrifugal fans

Series RER 160 NTD 165 Ø x 51 mm



Highlights:

- Control inputs, alarm and speed signals available on request.
- 3-phase fan drive with high degree of running smoothness.
- High pressure build-up.
- Backward curved impeller.

General characteristics:

- Fibreglass-reinforced plastic scroll housing and impeller; Housing base of steel plate.
- Fully integrated electronic commutation.
- Direction of air flow: axial air intake, centrifugal air exhaust out of the outlet.
- Connection via single strands AWG 22, TR 64. Bared and tin-plated.
- Mass: 590 g.

Nominal data		Air flow	Air flow	Nominal voltage	Voltage range	Sound power level	Sintec sleeve bearings / Ball bearings	Power input	Nominal speed	Temperature range	Service life L_{10} (40 °C) ebm-papst Standard	Service life L_{10} (T_{max}) ebm-papst Standard	Life expectancy $L_{10\Delta}$ (40 °C) see P. 15	Curve	Specials
	Type	m^3/h	CFM	VDC	VDC	Bel(A)	□ / ■	Watts	RPM	°C	Hours		Hours		P.
NEW	RER 160-28/14N/2TDA	370	217	**24**	16...28	7,4	■	51	4 200	-20...+60	55 000 / 27 500		110 000	2	
NEW	RER 160-28/18N/2TDHHP*	505	297,5	**48**	36...60	8,5	■	142	6 000	-20...+65	40 000 / 22 500		80 000	3	
min.	RER 160-28/18 NTD...	66	18,3	**48**	38...57	—		2,0	800	-20...+70	55 000 / 27 500		110 000	1	
max.															

Model RER 160-28/18 NTD... is available in customer-specific, custom-developed variant only.
The data specified here are technically feasible benchmark values. The fans can be specially adapted to your application with signal outputs and control inputs.
*The specific service life is valid when an external capacitor is wired between the plus and minus strands.
Please note the wiring suggestion.

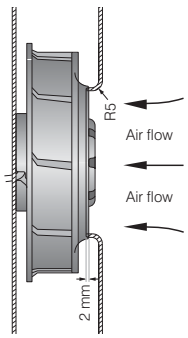

The air flow and noise level of fans without external housing depends on the installation conditions. The stated air flow and noise levels have been measured under the following conditions:
Centrifugal fan mounted on a base plate 260 x 260 mm. Cover plate 260 x 260 mm with an air inlet of Ø 100 mm, concentric to the impeller.

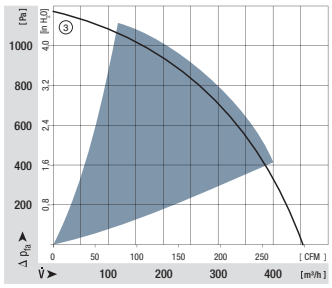

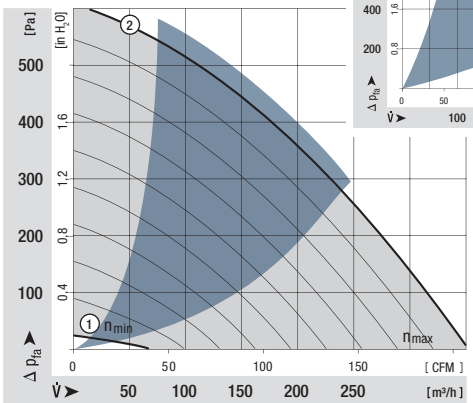

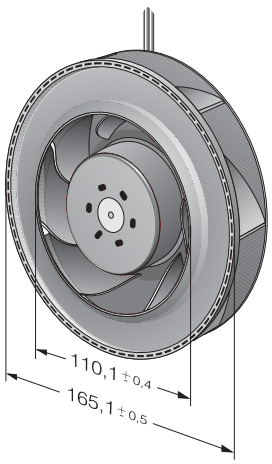

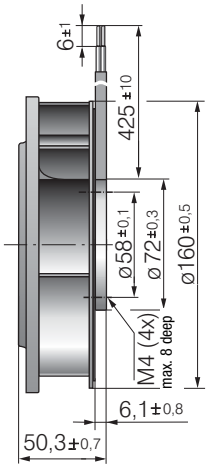

max. 800 m^3/h

DC centrifugal fans

Series REF 175 TD 175 Ø x 55 mm



Highlights:
- 3-phase fan drive with high degree of running smoothness.
- Very high pressure build-up. Backward curved impeller.
- Available as standard with PWM control input and speed signal. Additional inputs and outputs on request.

General characteristics:
- Impeller of galvanised steel plate.
- Fully integrated electronic commutation.
- Direction of rotation: CW seen on rotor.
- Direction of air flow: axial air intake, centrifugal air exhaust out of the outlet.
- Connection via single strands AWG 20, TR 64, speed signal and control input AWG 22, bared and tin-plated.
- Mass: 930 g.

	Nominal data	Air flow	Air flow	Nominal voltage	Voltage range	Sound power level	Sintec sleeve bearings / Ball bearings	Power input	Nominal speed	Temperature range	Service life L_{10} (40 °C) ebm-papst Standard	Service life L_{10} (T_{max}) ebm-papst Standard	Life expectancy $L_{10\Delta}$ (40 °C) see P. 15	Curve	Specials
	Type	m^3/h	CFM	VDC	VDC	Bel(A)	□/■	Watts	RPM	°C	Hours		Hours		
NEW	REF 175-30/18/2TDP	800	470	**48**	36 ... 72	8,3	■	121	4 400	-20...+60	65 000 / 37 500		130 000	1	

Speed control range from 800 rpm at 7 % PWM up to nominal speed at > 90 % PWM. Standstill at 0 % PWM, max. speed if control cable is interrupted.

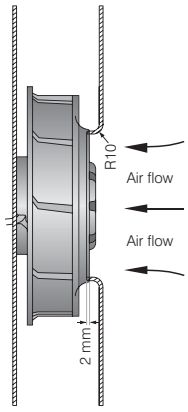

The air flow and noise level of fans without external housing depends on the installation conditions. The stated air flow and noise levels have been measured under the following conditions:
Centrifugal fan mounted on a base plate 180 x 180 mm.
Cover plate 180 x 180 mm with an air inlet of Ø 125,5 mm, concentric to the impeller.

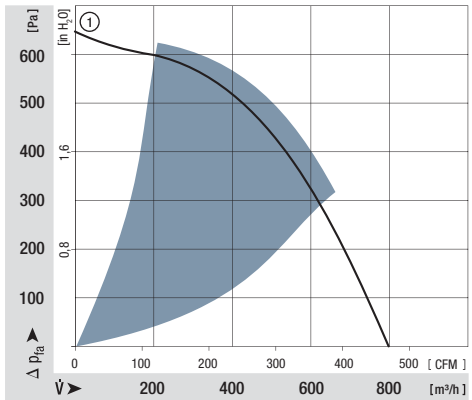

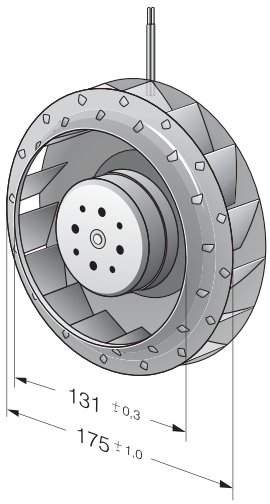

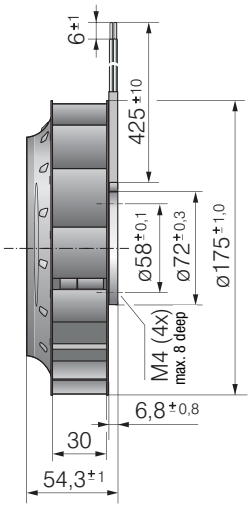

ebmpapst

max. 980 m^3/h

DC centrifugal fans

Series RER 175 TD 175 Ø x 69 mm



Highlights:
- 3-phase fan drive with high degree of running smoothness.
- Very high pressure build-up. Backward curved impeller.
- Available as standard with PWM control input and speed signal. Additional inputs and outputs on request.

General characteristics:
- Impeller of fibreglass-reinforced plastic.
- Fully integrated electronic commutation.
- Direction of rotation: CW seen on rotor.
- Direction of air flow: axial air intake, centrifugal air exhaust out of the outlet.
- Connection via single strands AWG 18, 20 or AWG 22, TR 64, speed signal and control input AWG 22, bared and tin-plated.
- Mass: 775 g.

	Nominal data	Air flow	Air flow	Nominal voltage	Voltage range	Sound power level	Sintec sleeve bearings / Ball bearings	Power input	Nominal speed	Temperature range	Service life L_{10} (40 °C) ebm-papst Standard	Service life L_{10} (T_{max}) ebm-papst Standard	Life expectancy $L_{10\Delta}$ (40 °C) see P. 15	Curve	Specials
	Type	m^3/h	CFM	VDC	VDC	Bel(A)	□ / ■	Watts	RPM	°C	Hours		Hours		
NEW	RER 175-42/14/2 TDMLP	600	353,0	**24**	16...30	7,3	■	45	3 400	-20...+65	72 500 / 45 000		145 000	1	
NEW	RER 175-42/14/2 TDMP	865	508,8	**24**	16...36	8,2	■	110	4 800	-20...+65	70 000 / 40 000		140 000	2	
NEW	RER 175-42/18/2 TDMLP	600	353,0	**48**	36...57	7,3	■	46	3 400	-20...+65	72 500 / 45 000		145 000	1	
NEW	RER 175-42/18/2 TDMP*	865	508,8	**48**	36...72	8,2	■	110	4 800	-20...+65	70 000 / 40 000		140 000	2	
NEW	RER 175-42/18/2 TDP	980	576,8	**48**	36...72	8,5	■	166	5 400	-20...+65	60 000 / 32 500		115 000	3	

* preliminary data

Speed control range from 800 rpm at 7 % PWM up to nominal speed at > 90 % PWM. Standstill at 0 % PWM, max. speed if control cable is interrupted.

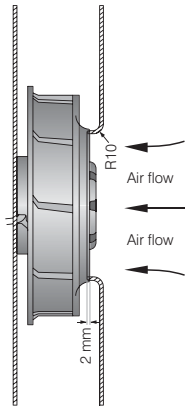

The air flow and noise level of fans without external housing depends on the installation conditions. The stated air flow and noise levels have been measured under the following conditions:
Centrifugal fan mounted on a base plate 180 x 180 mm.
Cover plate 180 x 180 mm with an air inlet of Ø 125,5 mm, concentric to the impeller.

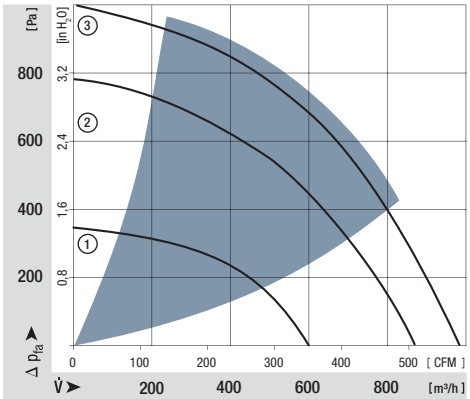

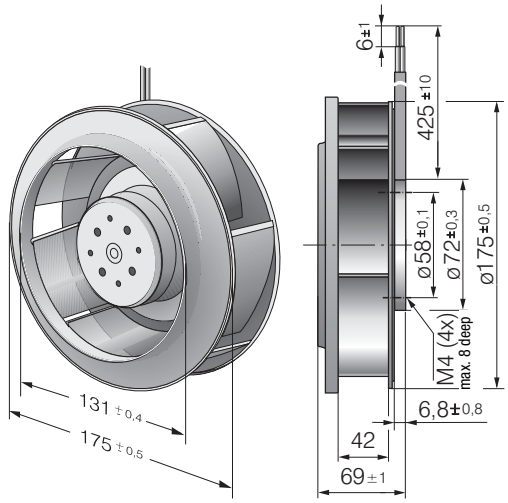

max. 970 m^3/h

DC centrifugal fans

Series RER 190 TD 190 Ø x 69 mm



Highlights:

- 3-phase fan drive with high degree of running smoothness.
- Very high pressure build-up.
- Backward curved RadiCal impeller with maximum efficiency.
- Standard models available with multifunctional control input for analogue, PWM and speed signal.

General characteristics:

- Impeller of fibreglass-reinforced plastic.
- Fully integrated electronic commutation.
- Direction of rotation: CW seen on rotor.
- Direction of air flow: axial air intake, centrifugal air exhaust out of the outlet.
- Connection via single strands AWG 18, 20 or AWG 22, TR 64, speed signal and control input AWG 22, bared and tin-plated.
- Mass: 870 g.

	Nominal data	Air flow	Air flow	Nominal voltage	Voltage range	Sound power level	Sintec sleeve bearings / Ball bearings	Power input	Nominal speed	Temperature range	Service life L_{10} (40 °C) ebm-papst Standard	Service life L_{10} (T_{max}) ebm-papst Standard	Life expectancy $L_{10\Delta}$ (40 °C) see P. 15	Curve	Specials
	Type	m^3/h	CFM	VDC	VDC	Bel(A)	□/■	Watts	RPM	°C	Hours		Hours		
NEW	RER 190-39/14/2TDML0	650	382,4	**24**	16...30	7,6	■	58	3 000	-20...+60	55 000 / 35 000		110 000	1	
NEW	RER 190-39/14/2TDM0	860	505,9	**24**	16...36	7,9	■	110	3 900	-20...+65	52 500 / 30 000		105 000	2	
NEW	RER 190-39/18/2TDML0	650	382,4	**48**	36...57	7,6	■	56	3 000	-20...+65	55 000 / 35 000		110 000	1	
NEW	RER 190-39/18/2TDM0	860	505,9	**48**	36...72	7,9	■	105	3 900	-20...+65	52 500 / 30 000		105 000	2	
NEW	RER 190-39/18/2TD0	970	570,6	**48**	36...72	8,3	■	148	4 400	-20...+65	40 000 / 22 500		80 000	3	

Speed control range from 800 rpm at 7 % PWM up to nominal speed at > 90 % PWM. Standstill at 0 % PWM, standstill if control cable is interrupted.

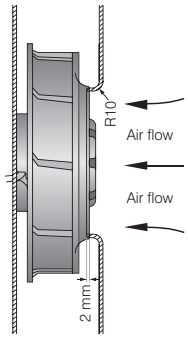

The air flow and noise level of fans without external housing depends on the installation conditions. The stated air flow and noise levels have been measured under the following conditions:
Centrifugal fan mounted on a base plate 195 x 195 mm.
Cover plate 195 x 195 mm with an air inlet of Ø 125,5 mm, concentric to the impeller.

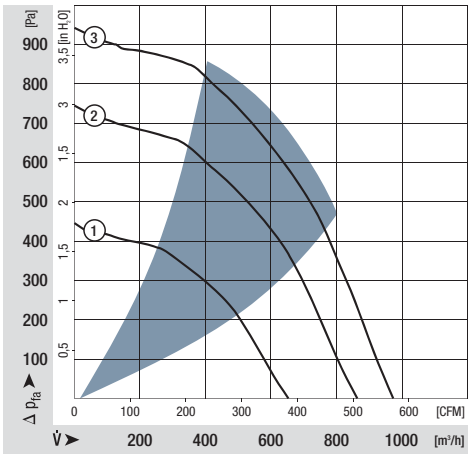

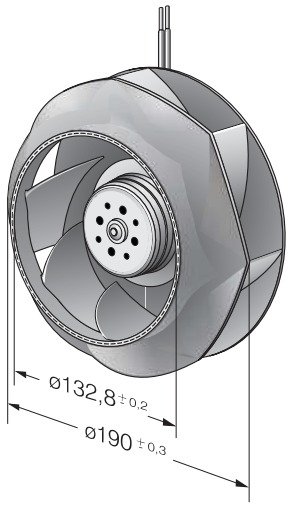

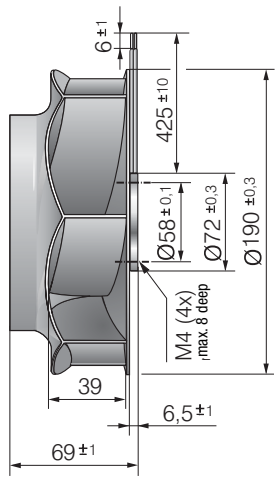

ebmpapst

max. 1280 m^3/h

DC centrifugal fans

Series RER 220 TD 221 Ø x 71 mm



Highlights:

- 3-phase fan drive with high degree of running smoothness.
- Very high pressure build-up.
- Backward curved impeller.
- Standard models available with multifunctional control input for analogue, PWM and speed sign.

General characteristics:

- Impeller of fibreglass-reinforced plastic.
- Fully integrated electronic commutation.
- Direction of rotation: CW seen on rotor.
- Direction of air flow: axial air intake, centrifugal air exhaust out of the outlet.
- Connection via single strands AWG 18, 20 or AWG 22, TR 64, speed signal and control input AWG 22, bared and tin-plated.
- Mass: 940 g.

	Nominal data	Air flow	Air flow	Nominal voltage	Voltage range	Sound power level	Sintec sleeve bearings / Ball bearings	Power input	Nominal speed	Temperature range	Service life L_{10} (40 °C) ebm-papst Standard	Service life L_{10} (T_{max}) ebm-papst Standard	Life expectancy $L_{10\Delta}$ (40 °C) see P. 15	Curve	Specials
	Type	m^3/h	CFM	VDC	VDC	Bel(A)	□/■	Watts	RPM	°C	Hours		Hours		
NEW	RER 220-44/14/2TDM0	1090	641,2	**24**	16...36	7,7	■	82	3 000	-20...+55	75 000 / 52 500		150 000	1	
NEW	RER 220-44/18/2TDM0	1090	641,2	**48**	36...72	7,7	■	80	3 000	-20...+55	75 000 / 52 500		150 000	1	
NEW	RER 220-44/18/2TD0	1280	752,9	**48**	36...72	8,0	■	140	3 500	-20...+55	55 000 / 40 000		110 000	2	

Speed control range from 800 rpm at 7 % PWM up to nominal speed at > 90 % PWM. Standstill at 0 % PWM, standstill if control cable is interrupted.

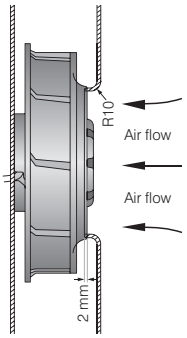

The air flow and noise level of fans without external housing depends on the installation conditions. The stated air flow and noise levels have been measured under the following conditions:
Centrifugal fan mounted on a base plate 230 x 230 mm.
Cover plate 230 x 230 mm with an air inlet of Ø 146 mm, concentric to the impeller.

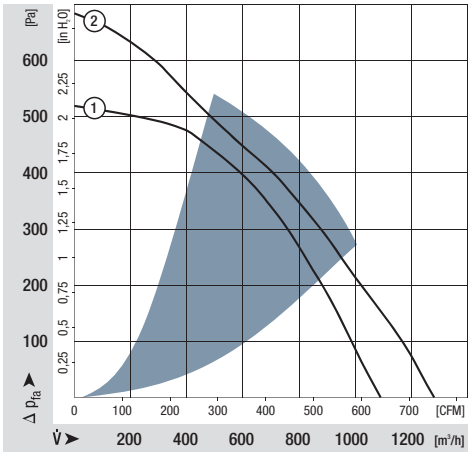

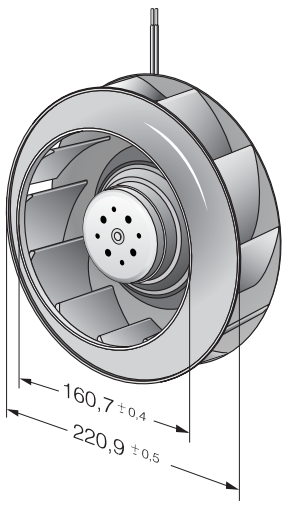

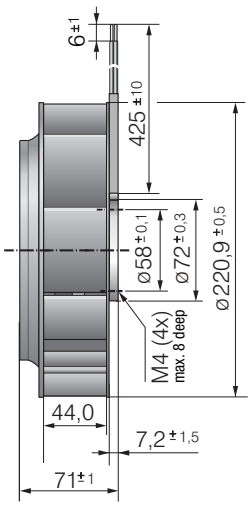

max. 1600 m^3/h

DC centrifugal fans

Series RER 225 TD 225 Ø x 99 mm



Highlights:

- 3-phase fan drive with high degree of running smoothness.
- Very high pressure build-up.
- TDM and TDML model with backward-curved RadiCal impeller with maximum efficiency.
- Standard models available with multifunctional control input for analogue, PWM and speed signal.

General characteristics:

- Impeller of fibreglass-reinforced plastic.
- Fully integrated electronic commutation.
- Direction of rotation: CW seen on rotor.
- Direction of air flow: axial air intake, centrifugal air exhaust out of the outlet.
- Connection via single strands AWG 18, 20 or AWG 22, TR 64, speed signal and control input AWG 22, bared and tin-plated.
- Mass: 1030 g.

	Nominal data	Air flow	Air flow	Nominal voltage	Voltage range	Sound power level	Sintec sleeve bearings / Ball bearings	Power input	Nominal speed	Temperature range	Service life L_{10} (40 °C) ebm-papst Standard	Service life L_{10} (T_{max}) ebm-papst Standard	Life expectancy $L_{10\Delta}$ (40 °C) see P. 15	Curve	Specials
	Type	m^3/h	CFM	VDC	VDC	Bel(A)	□/■	Watts	RPM	°C	Hours		Hours		
NEW	RER 225-55/18/2TDML0	1080	635,4	**48**	36...72	7,5	■	82	2 500	-20...+55	70 000 / 50 000		140 000	1	
NEW	RER 225-55/18/2TDM0	1210	711,9	**48**	36...72	7,9	■	120	2 800	-20...+55	55 000 / 40 000		110 000	2	
NEW	RER 225-63/18/2TDP-402	1600	941,3	**48**	36...72	8,1	■	165	3 300	-20...+55	52 500 / 37 500		105 000	3	

Speed control range from 800 rpm at 7 % PWM up to nominal speed at > 90 % PWM. Standstill at 0% PWM,
Type O: standstill at sensor break. Type P: maximum speed at sensor break.

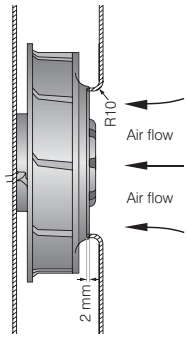

The air flow and noise level of fans without external housing depends on the installation conditions. The stated air flow and noise levels have been measured under the following conditions:
Centrifugal fan mounted on a base plate 230 x 230 mm. Cover plate 230 x 230 mm with an air inlet of Ø 146 mm, concentric to the impeller.

Type RER 225-63

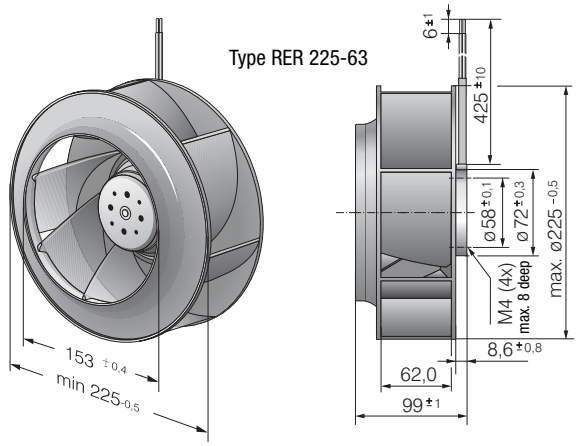

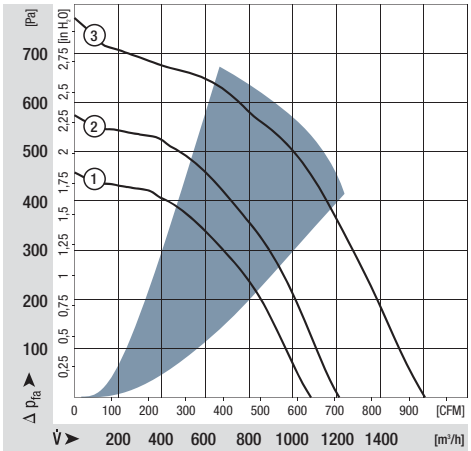

Type RER 225-55

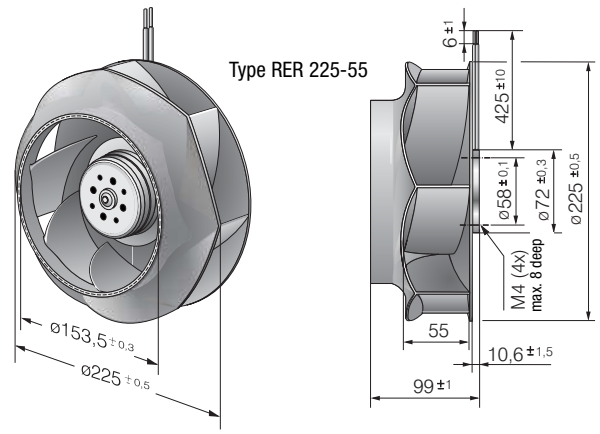

ebmpapst

max. 155 m^3/h

DC tangential fan

Series QG 030 201...413 x 50 x 48 mm

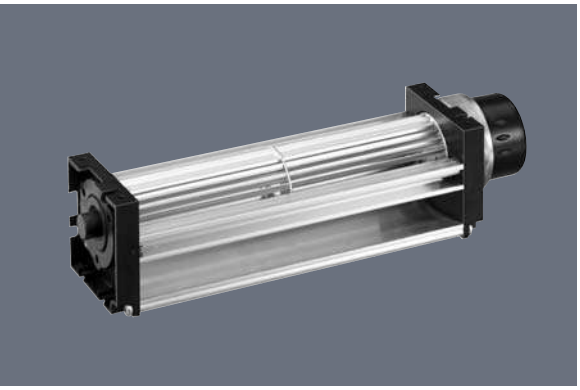

Highlights:

- Tangential fans with high air flow.
- Large air outlet.

General characteristics:

- Motor with ball bearing system. Impeller mounting plate with sleeve bearings.
- Fan housing and impeller of aluminium. Plastic housing side parts.
- Fully integrated electronic commutation.
- Protected against reverse polarity and locking.
- Air exhaust out of the outlet.
- Connection via single strands. Bared and tin-plated.
- Mass: 235 / 290 / 380 / 415 g.

Nominal data	Air flow	Air flow	Nominal voltage	Voltage range	Sound pressure level	Sound power level	Sleeve bearings / Ball bearings	Power input	Temperature range	Service life L_{10} (40 °C) ebm-papst Standard	Service life L_{10} (T_{max}) ebm-papst Standard	Life expectancy $L_{10\Delta}$ (40 °C) see P. 15	Curve	Specials
Type	m^3/h	CFM	VDC	VDC	db(A)	Bel(A)	□/■	Watts	°C	Hours		Hours		
QG 030-148/12	75	44,1	**12**	8...14	49	5,7	□/■	6,2	-20...+60	30 000 / 10 000		32 500	1	
QG 030-198/12	100	58,9	**12**	8...14	51	5,8	□/■	8,0	-20...+60	30 000 / 10 000		32 500	2	
QG 030-303/12	140	82,4	**12**	8...14	51	5,8	□/■	8,7	-20...+60	30 000 / 10 000		32 500	3	
QG 030-353/12	155	91,3	**12**	8...14	51	5,9	□/■	9,6	-20...+60	30 000 / 10 000		32 500	4	
QG 030-148/14	75	44,1	**24**	16...28	49	5,7	□/■	6,2	-20...+60	30 000 / 10 000		32 500	1	
QG 030-198/14	100	58,9	**24**	16...28	51	5,8	□/■	8,0	-20...+60	30 000 / 10 000		32 500	2	
QG 030-303/14	140	82,4	**24**	16...28	51	5,8	□/■	8,7	-20...+60	30 000 / 10 000		32 500	3	
QG 030-353/14	155	91,3	**24**	16...28	51	5,9	□/■	9,6	-20...+60	30 000 / 10 000		32 500	4	

Tangential fans are only suitable for operation with high rate and low back pressure.

Type Dimension:	L	L_1
QG 030-148/ ..	201 $^{+1,5}$	148
QG 030-198/ ..	258 $^{+1,5}$	198
QG 030-303/ ..	363 $^{+1,5}$	303
QG 030-353/ ..	413 $^{+1,5}$	353

The service life values refer to horizontal installation of the fan.

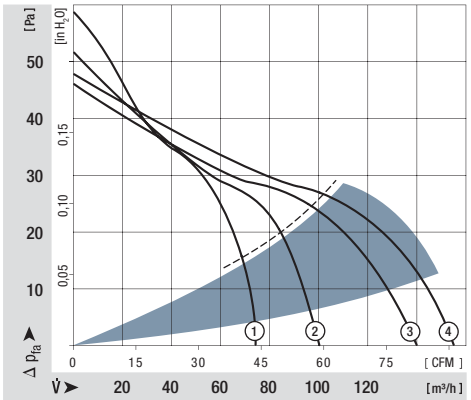

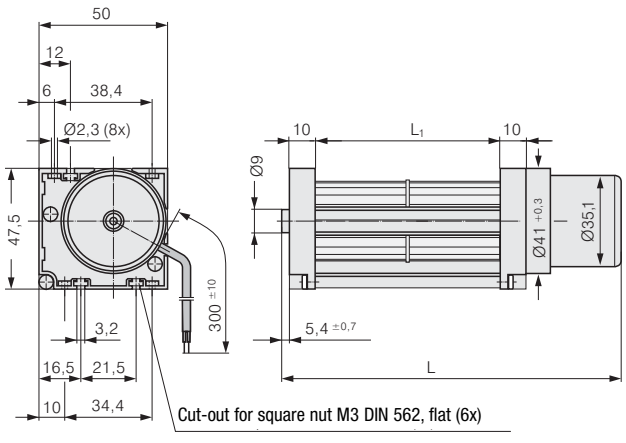


S-Force



DC fans - specials

	Sensor signal	110
	Alarm signal	114
	Vario-Pro / Speed setting / Control input	119
	Protection against ambient influences	123

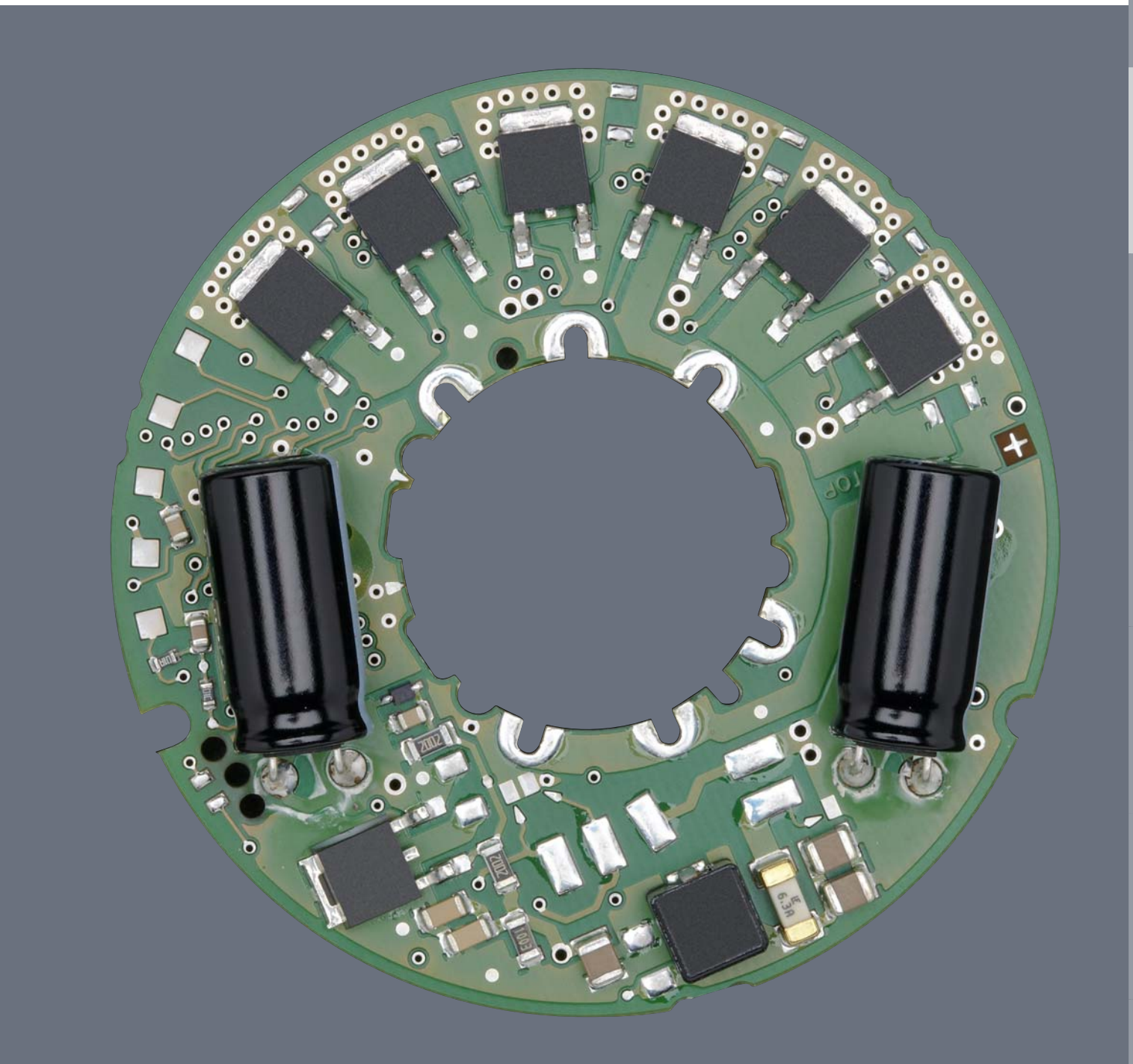

Technical information

Cooling capacity and efficiency
Greater power density, increasing miniaturisation and extreme electronic component density are posing increased demands on the cooling capacity and efficiency of fans. The intelligent and space-saving integration of the fan in the device configuration is therefore of major importance:

- Tailor-made cooling adapted to the situation as and when required.
- Programmable cooling by defining speed profiles.
- Transparency of function thanks to complete, interactive monitoring in all operating conditions.

ebm-papst provides intelligent cooling concepts which are optimally adapted to requirements. For example:

1. Speed adaptation via NTC sensor
Standard fans in electronics cooling– tried and tested by the millions and nevertheless a temporary solution, because standard fans have a distinct disadvantage: With constant speed and a corresponding high noise factor, they continuously provide the air flow required in extreme cases. This extreme case only occurs-, if it occurs at all-, for a fraction of the service life. What is needed is an intelligent fan that automatically adapts to the current cooling requirements.

The ebm-papst answer: A complete range of DC fans with temperature-controlled speed adaptation - in all standard dimensions.
Installation is simple. The control electronics receive their thermal information for speed adaptation steplessly and loss-free via a temperature sensor either externally via a single lead, positioned as required, or internally directly in the fan hub in the air flow.

2. DC fans with separate control input
Open or closed-loop speed control is also possible with DC fans that have a separate control input. A variation in speed can thus be implemented via a control voltage or a pulse-width modulated signal. These possibilities are used primarily in devices that have appropriate standard interfaces and thus require a load-dependent variation of the fans.



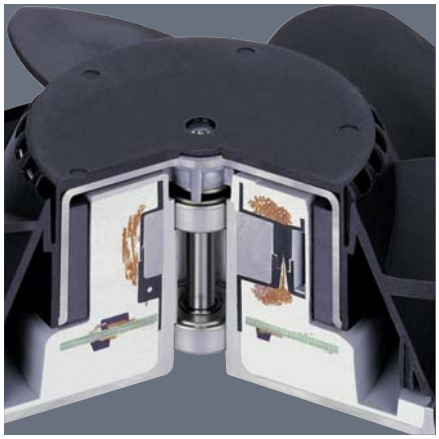





Technical information

3. Sensor signal
DC fans with sensor signal.
The integrated „electronic tachometer“ continuously provides an actual speed signal for external evaluation. The user is informed at all times of the current fan speed via an extremely simple signal evaluation on the customer side. The sensor signal is via a separate lead.

4. Alarm signal
For applications which require monitored fan operation with alarm signal, ebm-papst has numerous alarm signal versions, either a static, pre-processed or interface-compatible high or low continuous signal depending on the type of fan.

5. Turbo drives
Fans with three-phase EC drives and microprocessor-controlled motor electronics. These three-phase motors whose torque is virtually non-reliant on the rotor position are used for extremely high running smoothness. The speed of these fans can be controlled over a very wide range with PWM, analogue voltage or temperature. Optionally, the fans can be supplied with reversible direction of rotation and active brake operation.

6. Vario-Pro fans
This high-end fan concept by ebmpapst with programmed intelligence and customer-specific integrated functions makes your electronics cooling even more versatile and competitive. Vario-Pro ensures a fresh economic breeze for all demanding cooling tasks – e.g. where greater reliability, more flexibility and intelligent function features such as alarm function, speed control etc. are required.

The successful concept of Vario-Pro is: Tailor-made software instead of fixed hardware, because programmed software modules for motor control and application intelligence are responsible for the work that analogue components were responsible for in the past. This central control unit of the Vario-Pro comprises a microcontroller and an EEPROM, on which all characteristics are stored.

7. Protection against environmental influences
Some applications place particular demands on the fans' resistance to ambient influences, such as dust, moisture, water and salt. ebm-papst offer solutions for adapting fans to these ambient conditions.

Speed signal /2

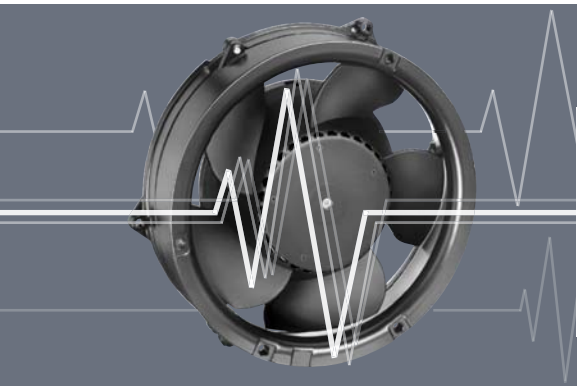

- Speed-proportional rectangular pulse for external speed monitoring of fan motor.
- 2, 3 or 6 pulses per revolution.
- Open collector signal output.
- Extremely wide operating voltage range.
- Easy adaptation to user interface.
- Connection via separate lead.
- The sensor signal also serves as a major comparison variable for setting and maintaining the setpoint speed for interactive or controlled cooling with one or several interconnected fans.

Electrical connection

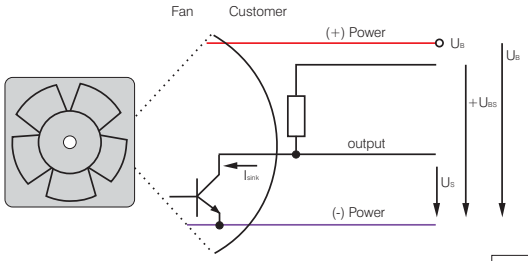

All voltages measured to ground.
External load resistor R_a / U_S / U_{BS} required.

$$R_a = \frac{U_{BS} - U_{SLOW}}{I_{SINK}}$$

Signal output voltage
Standard signal for all models (exceptions see below)

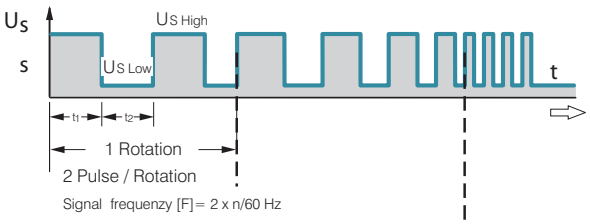

only for 4100 NH7 and NH8

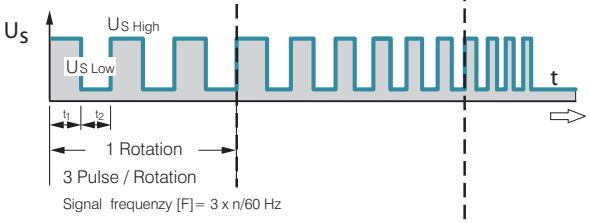

All TD fans. Ex.: 6400 TD

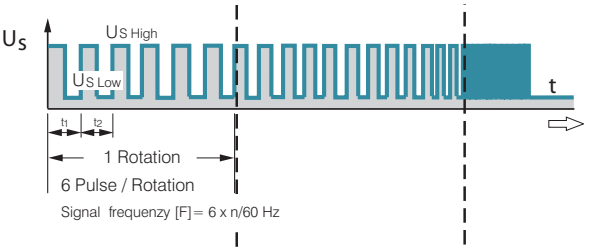

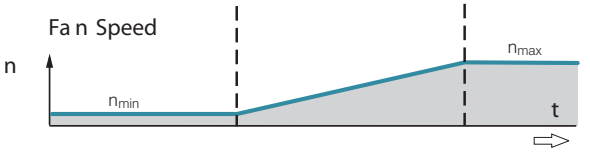

Signal data	Speed signal U_S Low	Condition: I_{sink}	Speed signal U_S High	Condition: I_{source}	Sensor operating voltage U_{BS}	Perm. sink current I_{sink} max.	Pulses per revolution	Fan description
Type	**VDC**	**mA**	**VDC**	**mA**	**VDC**	**mA**		**Page**
250	≤ 0,4	≤ 2	30	0	≤ 30	2	2	23
400 F	≤ 0,4	1	30	0	≤ 30	≤ 2	2	24
400	≤ 0,4	1	30	0	≤ 30	≤ 2	2	25
400 J	≤ 0,4	2	30	0	≤ 30	≤ 4	2	26
500 F	≤ 0,4	1	30	0	≤ 30	≤ 2	2	27
600 F	≤ 0,4	1	30	0	≤ 30	≤ 2	2	28
620	≤ 0,4	2	30	0	≤ 30	≤ 4	2	29
630 U	≤ 0,4	2	30	0	≤ 30	≤ 4	2	30
600 N	≤ 0,4	2	28	0	≤ 28	≤ 4	2	31
600 J	≤ 0,4	2	30	0	≤ 30	≤ 4	2	33
700 F	≤ 0,4	2	30	0	≤ 30	≤ 4	2	34
8450	≤ 0,4	2	28	0	≤ 28	≤ 4	2	35
8400 N	≤ 0,4	2	28	0	≤ 28	≤ 4	2	36
8400 N VARIOFAN	≤ 0,4	2	30	0	≤ 30	≤ 4	2	37
8300	≤ 0,4	2	30	0	≤ 30	≤ 4	2	38
8200 J	≤ 0,4	2	30	0	≤ 30	≤ 4	2	39
3400 N	≤ 0,4	2	28	0	≤ 28	≤ 4	2	40
3400 N VARIOFAN	≤ 0,4	2	30	0	≤ 30	≤ 4	2	41
3300	≤ 0,4	2	30	0	≤ 30	≤ 4	2	42
3212 J / 3214 J	≤ 0,4	2	30	0	≤ 30	≤ 4	2	43
3218 J	≤ 0,4	2	60	0	≤ 60	≤ 4	2	43
4412 F / 4414 F	≤ 0,4	2	30	0	≤ 30	≤ 4	2	44
4418 F	≤ 0,4	2	60	0	≤ 60	≤ 4	2	44
4400 FN	≤ 0,4	2	30	0	≤ 30	≤ 4	2	45
4312 / 4314	≤ 0,4	2	30	0	≤ 30	≤ 4	2	46
4318	≤ 0,4	2	60	0	≤ 60	≤ 4	2	46
4312 / 4314 VARIOFAN	≤ 0,4	2	30	0	≤ 30	≤ 4	2	47
4318 VARIOFAN	≤ 0,4	2	60	0	≤ 60	≤ 4	2	47
4400	≤ 0,4	2	30	0	≤ 30	≤ 4	2	48
4100 N	≤ 0,4	2	30	0	≤ 30	≤ 4	2	49
4100 NHH...NH6	≤ 0,4	2	≤ 60	0	≤ 60	≤ 10	2	50
4100 NH7...NH8	≤ 0,4	2	≤ 60	0	≤ 60	≤ 20	3	51
DV 4100	≤ 0,4	2	30	0	≤ 30	≤ 4	2	52
5200 N	≤ 0,4	2	30	0	≤ 30	≤ 4	2	53

ebmpapst

Available on request:
– Electrically isolated sensor and signal circuit.
– Varying voltage potentials for power and logic circuit.

Signal data	Speed signal $U_{S\ Low}$	Condition: I_{sink}	Speed signal $U_{S\ High}$	Condition: I_{source}	Sensor operating voltage U_{BS}	Perm. sink current $I_{sink\ max.}$	Pulses per revolution	Fan description
Type	**VDC**	**mA**	**VDC**	**mA**	**VDC**	**mA**		**Page**
DV 5200	≤ 0,4	2	30	0	≤ 30	≤ 4	2	54
5112 N	≤ 0,4	2	15	0	≤ 5	≤ 20	2	55
5114 N / 5118 N	≤ 0,4	2	60	0	≤ 60	≤ 20	2	55
5300	≤ 0,4	2	≤ 72	0	≤ 72	≤ 4	2	56
5300 TD	≤ 0,4	2	72	0	≤ 72	≤ 20	6	57
7112 N / 7118 N	≤ 0,4	2	60	0	≤ 60	≤ 20	2	58
7114 N	≤ 0,4	2	30	0	≤ 30	≤ 20	2	58
7200 N	≤ 0,4	2	15	0	≤ 15	≤ 20	2	59
6300	≤ 0,4	2	≤ 72	0	≤ 72	≤ 20	2	61
6300 TD	≤ 0,4	2	72	0	≤ 72	≤ 20	6	62
DV 6200	≤ 0,4	2	30	0	≤ 60	≤ 20	2	64
6400	≤ 0,4	2	60	0	≤ 60	≤ 20	2	66
2200 FTD	≤ 0,4	2	72	0	≤ 72	≤ 20	6	70
RL 48	≤ 0,4	2	3	0	≤ 30	≤ 4	2	81
RL 65	≤ 0,4	2	30	0	≤ 30	≤ 4	2	82
RL 90 N	≤ 0,4	2	30	0	≤ 30	≤ 4	2	83
RLF 100	≤ 0,4	2	30	0	≤ 30	≤ 4	2	84
RG 90 N	≤ 0,4	2	30	0	≤ 30	≤ 4	2	85
RG 125 N	≤ 0,4	2	30	0	≤ 30	≤ 4	2	86
RG 160 N	≤ 0,4	2	30	0	≤ 30	≤ 20	2	87
RG 160 TD	≤ 0,4	2	60	0	≤ 60	≤ 20	6	88
RG 190 TD	≤ 0,4	2	72	0	≤ 72	≤ 20	6	89
RG 220 TD	≤ 0,4	2	72	0	≤ 72	≤ 20	6	90
RG 225 TD	≤ 0,4	2	72	0	≤ 72	≤ 20	6	91
RET 97 TD	≤ 0,4	2	72	0	≤ 72	≤ 20	6	92
REF 100	≤ 0,4	2	30	0	≤ 30	≤ 4	2	93
RER 120 TD	≤ 0,4	2	72	0	≤ 72	≤ 20	6	95
RER 133 TD	≤ 0,4	2	72	0	≤ 72	≤ 20	6	97
RER 160 TD	≤ 0,4	2	60	0	≤ 60	≤ 20	6	99
REF 175 TD	≤ 0,4	2	72	0	≤ 72	≤ 20	6	100
RER 175 TD	≤ 0,4	2	72	0	≤ 72	≤ 20	6	101
RER 190 TD	≤ 0,4	2	72	0	≤ 72	≤ 20	6	102
RER 220 TD	≤ 0,4	2	72	0	≤ 72	≤ 20	6	103
RER 225 TD	≤ 0,4	2	72	0	≤ 72	≤ 20	6	104

Attention:
With these fan options, deviations in regard to temperature range, voltage range and power consumption are possible compared with standard fan data.

Speed signal /12

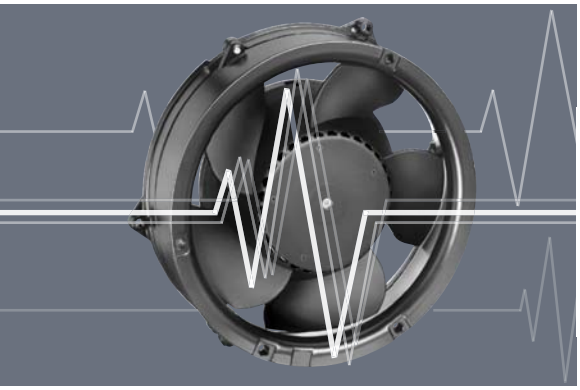

- Speed-proportional rectangular pulse for external speed monitoring of fan motor.
- 2, 3 or 6 pulses per revolution.
- TTL-compatible.
- Integrated pull-up resistor.
- Connection via separate lead.
- The sensor signal also serves as a major comparison variable for setting and maintaining. the setpoint speed for interactive or controlled cooling with one or more interconnected fans.

Electrical connection

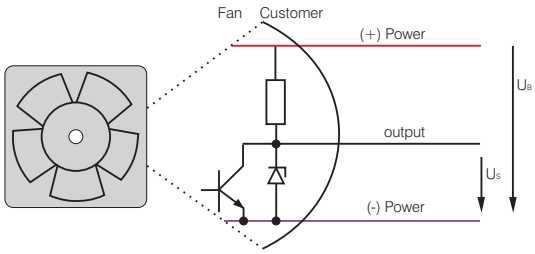

All voltages measured to ground.

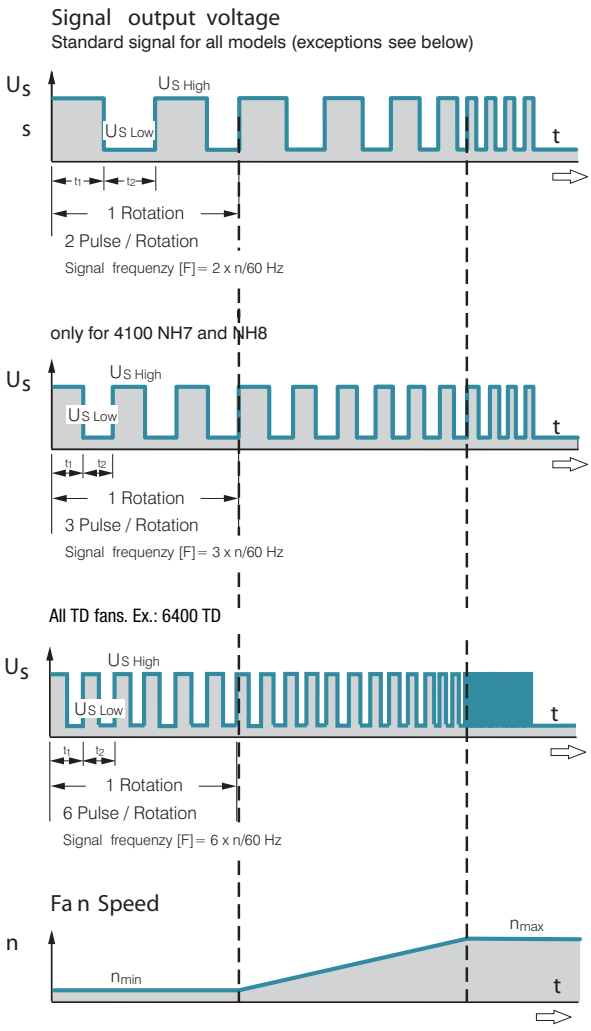

Signal data	Speed signal U_S Low	Condition: I_{sink}	Speed signal U_S High	Condition: I_{source}	Perm. sink current I_{sink} max.	Fan description
Type	**VDC**	**mA**	**VDC**	**mA**	**mA**	**Page**
614 N/12 GM	≤ 0,4	1	2,5–5,5	1	1	31
618 N/12 N	≤ 0,4	1	2,5–5,5	1	1	31
8412 N/12 H	≤ 0,4	1	2,5–5,5	1	1	36
4412 F/12 GM	≤ 0,4	1	2,5–5,5	1	1	44
4418 F/12	≤ 0,4	1	2,5–5,5	1	1	44
4312 /12 M	≤ 0,4	1	2,5–5,5	1	1	46
4314 /12	≤ 0,4	1	2,5–5,5	1	1	46
4182 N/12 X	≤ 0,4	1	2,5–5,5	1	1	49

Attention:
With these fan options, deviations in regard to temperature range, voltage range and power consumption are possible compared with standard fan data..

Available on request:
– Electrically isolated sensor and signal circuit.
– Varying voltage potentials for power and logic circuit.

Signal data	Speed signal U_S Low	Condition: I_{sink}	Speed signal U_S High	Condition: I_{source}	Perm. sink current I_{sink} max.	Fan description
Type	**VDC**	**mA**	**VDC**	**mA**	**mA**	**Page**
7214 N/12	≤ 0,4	2	2,5–5,5	1	≤ 20	59
DV 6224 /12	≤ 0,4	2	4,5–5,25	2	≤ 12	64
6424 /12 H	≤ 0,4	2	2,5–5,5	1	≤ 20	66
DV 6424 /12	≤ 0,4	2	4,5–5,25	2	≤ 12	68
DV 6448 /12	≤ 0,4	2	4,5–5,25	2	≤ 12	68
RG 125-19/12N/12	≤ 0,4	1	2,5–5,5	1	≤ 1	86
RG 160-28/12N/12	≤ 0,4	2	2,5–5,5	1	≤ 5	87
RG 160-28/18N/12	≤ 0,4	2	2,5–5,5	1	≤ 20	87
RER 125-19/12N/12	≤ 0,4	1	2,5–5,5	1	≤ 1	96
RER 160-28/12N/12	≤ 0,4	2	2,5–5,5	1	≤ 5	98
RER 160-28/18N/12	≤ 0,4	2	2,5–5,5	1	≤ 20	98

Attention:
With these fan options, deviations in regard to temperature range, voltage range and power consumption are possible compared with standard fan data.

Alarm signal /17

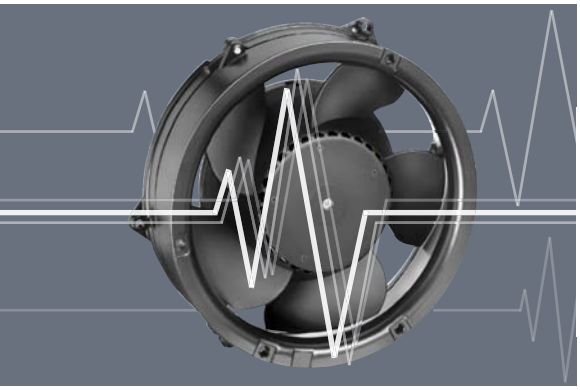

- Alarm signal for speed monitoring.
- Signal output via open collector.
- The fan emits a high continuous signal during trouble-free operation within the permissible voltage range.
- Low signal when speed limit is not reached.
- After elimination of fault, the fan returns to its setpoint speed; the alarm signal reverts to high.

Alarm signal data	Alarm output voltage U_A Low	Condition:	Condition: I_{sink} =	Alarm output-voltage U_A High	Condition:	Condition: I_{source}	Alarm operating-voltage U_{BA} max.	Max. permissible Sink current	Alarm delay time t_2	Condition:	Speed limit n_G	Fan description
Type	**VDC**		**mA**	**VDC**		**mA**	**VDC**	**mA**	**S**		**min^{-1}**	**Page**
8318 /17	≤ 0,4	n < nG	2	60	n > nG	0	≤ 60	20	≤ 15	*	1500 ± 100	38
8318 /17 H	≤ 0,4	n < nG	2	60	n > nG	0	≤ 60	20	≤ 15	*	1500 ± 100	38
3314 /17	≤ 0,4	n < nG	2	60	n > nG	0	≤ 60	20	≤ 15	*	1500 ± 100	42
3318 /17 H	≤ 0,4	n < nG	2	60	n > nG	0	≤ 60	20	≤ 15	*	1500 ± 100	42
4318 /17	≤ 0,4	n < nG	2	60	n > nG	0	≤ 60	20	≤ 15	*	850 ± 100	46
4184 N /17 X	≤ 0,4	n < nG	2	60	n > nG	0	≤ 60	20	≤ 15	*	1500 ± 100	49

Attention: With these fan specials, deviations as regards temperature range, voltage range and power consumption are possible compared with standard fans.

Electrical connection

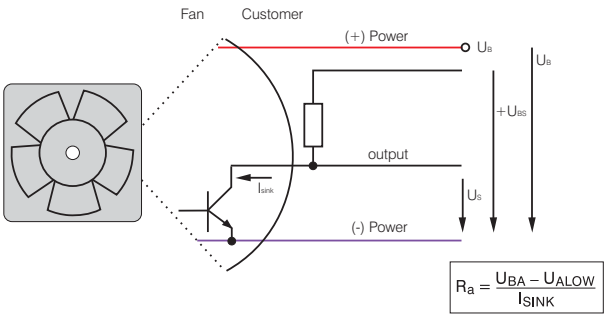

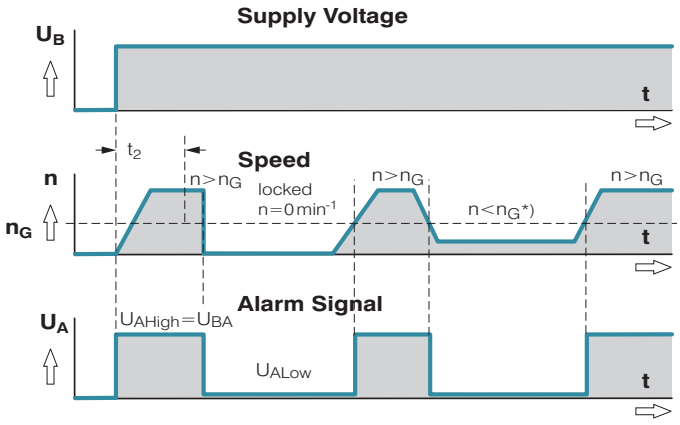

All voltages measured to ground.
External load resistor R_a from U_A to U_{BA} required.
With VARIOFANs with external temperature sensor for controlling the motor speed, the NTC sensor is not included in the scope of delivery.
Temperature sensor LZ 370, see Accessories.

t_2 = Alarm signal suppression during start-up
* n < speed limit n_G by braking or locking.

ebmpapst

Available on request:

- With integrated signal latching for subsequent recognition of short-time faults.
- Alarm circuit open collector or TTL.
- Electrically isolated for maximum device safety;
  Defects in the power circuit do not affect the alarm circuit.

Alarm signal data	Alarm output voltage U_A Low	Condition:	Condition: I_{sink} =	Alarm output-voltage U_A High	Condition:	Condition: I_{source} =	Alarm operating-voltage U_{BA} max.	Max. permissible Sink current	Alarm delay-time t_2	Condition:	Speed limit n_G	Fan description
Type	**VDC**		**mA**	**VDC**		**mA**	**VDC**	**mA**	**S**		**min^{-1}**	**Page**
4312/17 MV VARIOFAN	≤ 0,4	n < nG	2	60	n > nG	0	≤ 60	20	≤ 15	*	1500 ± 100	47
4312/17 T VARIOFAN	≤ 0,4	n < nG	2	60	n > nG	0	≤ 60	20	≤ 15	*	1500 ± 100	47
4314/17 T VARIOFAN	≤ 0,4	n < nG	2	60	n > nG	0	≤ 60	20	≤ 15	*	1150 ± 100	47
4318/17 V VARIOFAN	≤ 0,4	n < nG	2	60	n > nG	0	≤ 60	20	≤ 15	*	850 ± 100	47
7214 N/17	≤ 0,4	n < nG	2	60	n > nG	0	≤ 60	15	≤ 15	*	1330 ± 60	59

* After switching on U_B

Attention:
With these fan specials, deviations as regards temperature range,
voltage range and power consumption are possible compared with standard fans.

Alarm signal /19

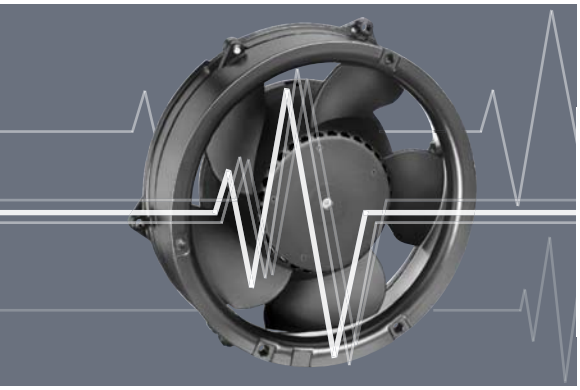

- Alarm signal for speed monitoring.
- Signal output via open collector.
- The fan emits a low continuous signal during trouble-free operation within the permissible voltage range.
- High signal when speed limit is not reached.
- After elimination of fault, the fan returns to its setpoint speed; the alarm signal reverts to low.

Alarm signal data	Alarm output voltage U_A Low	Condition:	Condition: I_{sink} =	Alarm output voltage U_A High	Condition:	Condition: I_{source} =	Alarm operating-voltage U_{BA} max.	Max. permissible Sink current	Alarm delay-time t_2	Condition:	Speed limit n_G	Fan description
Type	**VDC**		**mA**	**VDC**		**mA**	**VDC**	**mA**	**S**		**min^{-1}**	**Page**
8314 /19 H	≤ 0,4	n > nG	2	60	n < nG	0	≤ 60	20	≤ 15	*	1500 ± 100	38
4312 /19	≤ 0,4	n > nG	2	60	n < nG	0	≤ 60	20	≤ 15	*	1500 ± 100	46
7214 N /19	≤ 0,4	n > nG	2	60	n < nG	0	4,5–60	10	10 ± 4	*	1800 ± 20	59
RLF 100-11/14 /19	≤ 0,4	n > nG	2	≤ 28	n < nG	0	16–28	10	10 ± 4	*	1900 ± 100	84
RER 101-36/18N /19 HH	≤ 0,4	n > nG	2	≤ 28	n < nG	0	16–28	10	10 ± 4	*	1900 ± 100	94

* After switching on U_B

Attention:
With these fan specials, deviations as regards temperature range, voltage range and power consumption are possible compared with standard fans.

Available on request:
- With integrated signal latching for subsequent recognition of short-term faults.
- Alarm circuit open collector or TTL.
- Electrically isolated for max. device safety; defects in power circuit have no effect on the alarm circuit.

Electrical connection

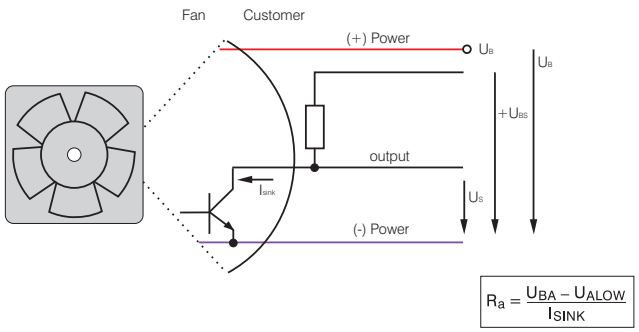

All voltages measured to ground.
External load resistor R_a from U_A to U_{BA} required.

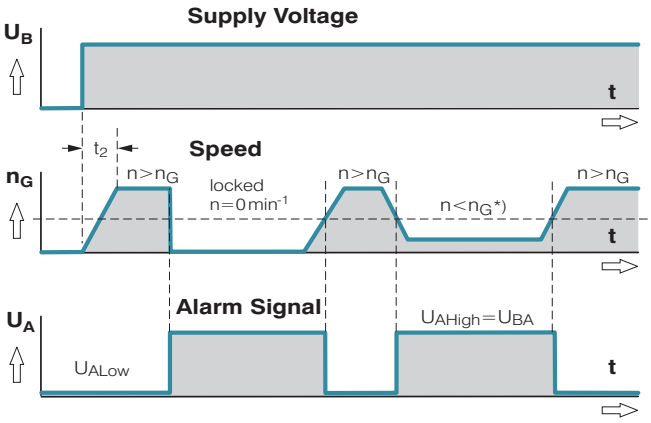

t_2 = Alarm signal suppression during start-up.
* n < Speed limit n_G by braking or locking.

ebmpapst

Alarm signal /37

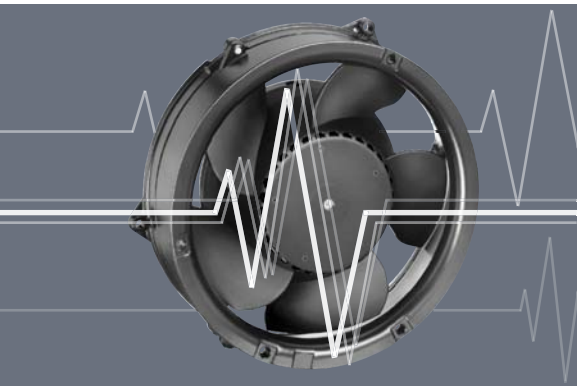

- Alarm signal for speed monitoring.
- Signal output via open collector.
- The fan emits a high continuous signal during trouble-free operation within the permissible voltage range.
- Low signal when speed limit is not reached.
- After elimination of fault, the fan returns to its setpoint speed; the alarm signal reverts to high.

Available on request:
- Alarm circuit TTL compatible.

Alarm signal data	Alarm output voltage U_A Low	Condition:	Condition: I_{sink} =	Alarm output voltage U_A High	Condition:	Condition: I_{source} =	Alarm operating-voltage U_{BA} max.	Max. permissible Sink current I_{sink}	Alarm delay-time t_2	Condition:	Speed limit n_G	Fan description
Type	**VDC**		**mA**	**VDC**		**mA**	**VDC**	**mA**	**S**		**min^{-1}**	**Page**
8412 N/37 GMLV	≤ 0,4	n ≤ nG	2	28	n > nG	0	≤ 28	10	<1	*	0	36
3412 N/37 GV	≤ 0,4	n ≤ nG	2	28	n > nG	0	≤ 28	10	<1	*	0	40

* After switching on U_B

Attention:
With these fan specials, deviations as regards temperature range, voltage range and power consumption are possible compared with standard fans.

Electrical connection

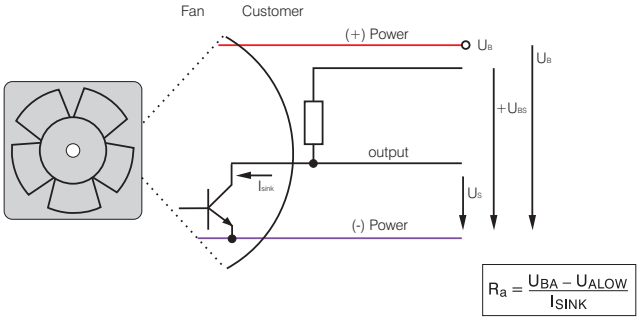

All voltages measured to ground.
External load resistor R_a from U_A to U_{BA} required.

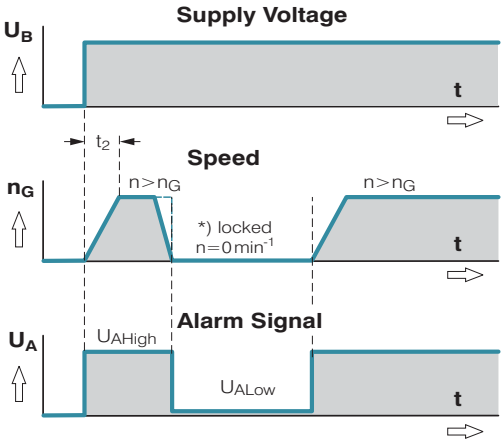

t_2 = Alarm signal suppression during start-up.
* n < Speed limit n_G by braking or locking.

Alarm signal /39

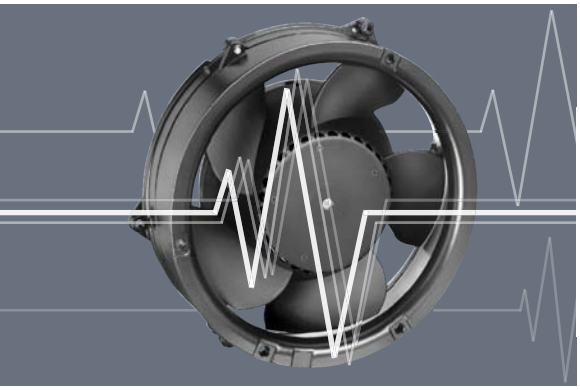

- Alarm signal for speed monitoring.
- Signal output via open collector.
- The fan emits a low continuous signal during trouble-free operation within the permissible voltage range.
- High signal when speed limit is not reached.
- After elimination of fault, the fan returns to its setpoint speed; the alarm signal reverts to low.

Alarm signal data	Alarm output voltage U_A Low	Condition:	Condition: I_{sink} =	Alarm output voltage U_A High	Condition:	Condition: I_{source} =	Alarm operating-voltage U_{BA} max.	Max. permissible Sink current I_{sink}	Alarm delay-time t_2	Condition:	Speed limit n_G	Fan description
Type	**VDC**		**mA**	**VDC**		**mA**	**VDC**	**mA**	**S**		**min^{-1}**	**Page**
412 /39	≤ 0,5	n > nG	2	28	n = nG	0	≤ 28	10	<1	*	0	25
612 F/39 H	≤ 0,5	n > nG	2	28	n = nG	0	≤ 28	10	<1	*	0	28
614 N /39 M	≤ 0,5	n > nG	2	28	n = nG	0	≤ 28	10	<1	*	0	31
618 N /39 N	≤ 0,5	n > nG	2	28	n = nG	0	≤ 28	10	<1	*	0	31
3412 N/39 H	≤ 0,5	n > nG	2	28	n = nG	0	≤ 28	10	<1	*	0	40
3414 N/39 HH	≤ 0,5	n > nG	2	28	n = nG	0	≤ 28	10	<1	*	0	40
4412 F/39 GL	≤ 0,5	n > nG	2	28	n = nG	0	≤ 28	10	<1	*	0	44
4412 F/39 M	≤ 0,5	n > nG	2	28	n = nG	0	≤ 28	10	<1	*	0	44
4414 F/39	≤ 0,5	n > nG	2	28	n = nG	0	≤ 28	10	<1	*	0	44
4414 FN/39 H	≤ 0,4	n > nG	2	≤ 30	n = nG	0	≤ 30	4	<1	*	0	44

* after switching on U_B

Attention:
With these fan specials, deviations as regards temperature range, voltage range and power consumption are possible compared with standard fans.

Electrical connection

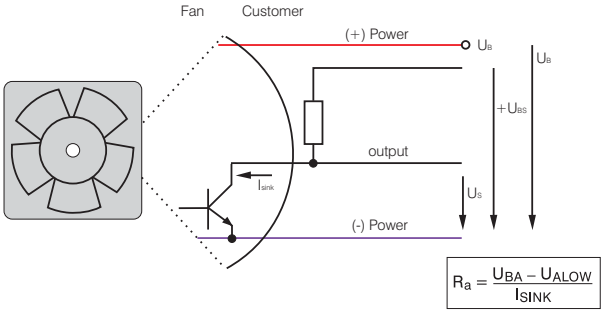

All voltages measured to ground
External load resistor Ra from U_A to U_{BA} required.

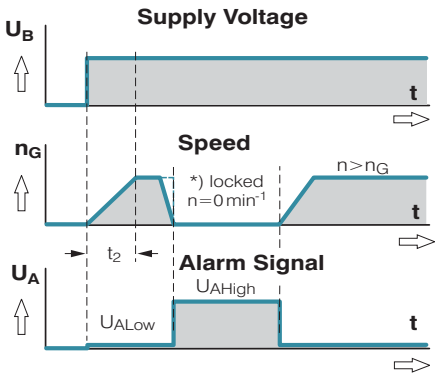

t_2 = Alarm signal suppression during start-up
* n < Speed limit n_G by braking or locking

ebmpapst

Vario-Pro®

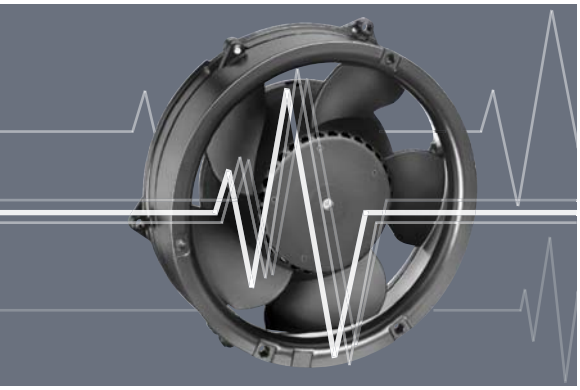

– "Software instead of hardware" – aptly describes the unique fan concept, equipped at the plant with tailor-made intelligence for cooling electronics.
– Flexible configuration using software, allows quicker availability, sampling from the factory and the ability to supply customer-specific solutions in any quantity.

Vario-Pro-Features

External Speed setting
– Speed setting via temperature, PWM or analogue control voltage.
  See page 120 (Speed setting).
– Description of speed curve with up to 14 selectable interpolation points.
  Linear interpolation between the points.
– Zero speed possible.
– Recognition of sensor failure: In case of loss of sensor, the fan operates at programmable (fail-safe) speed.

Alarm and tachometer functions
– Optional alarm and/or tachometer function
– Selectable alarm speed limit (with hysteresis) and alarm delay time
– Latching of alarm signal
– Delay only when starting or permanently active
– "High" or "Low" output signal in case of alarm
– Optional alarm if temperature sensor fails.
– Optional alarm in case of excess temperature.

Motor management
– High control accuracy due to digital motor management
– Higher operating efficiency due to optimum adaptation of motor hardware and software.

Fan series	Page
620	29
8400 N	36
8300	38
8200 J	39
3400 N	40
3300	42
3200 J	43
4400 FN	45
4300	40
4100 N	49
4100 NH	50
4100 NH 7-8	51

Fan series	Page
DV 4100	52
5200 N	53
DV 5200	54
5100 N	55
5300	56
7100 N	58
7200 N	59
6100	60
6300	61
DV 6200	64
6400	66
DV 6400	68

Fan series	Page
RL 90 N	83
RLF 100	84
RG 90 N	85
RG 125 N	86
RG 160 N	87
REF 100	93
RER 101	94
RER 125 N	96
RER 160 N	98

Speed setting via temperature sensor

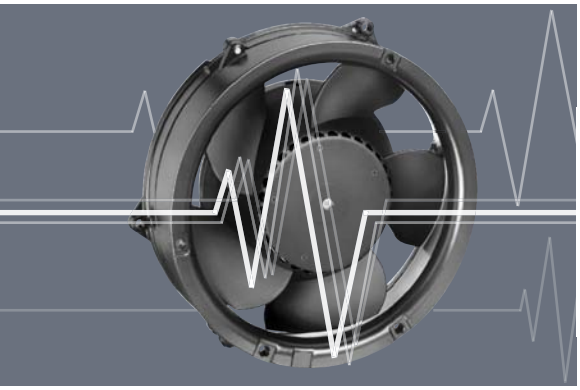

– The control variable is a temperature sensor that is either integrated into the fan or connected to an additional control wire.

External temperature sensor Type T

– Ext. NTC type LZ370 is required (not included in the standard scope of delivery).

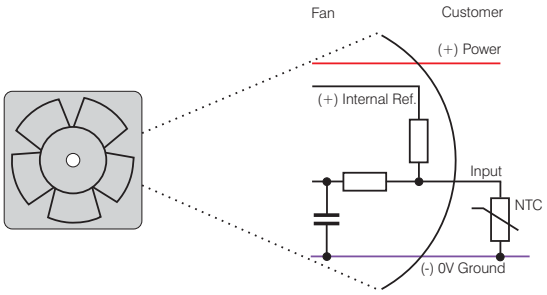

Internal temperature sensor Type I

– NTC integrated in fan hub.

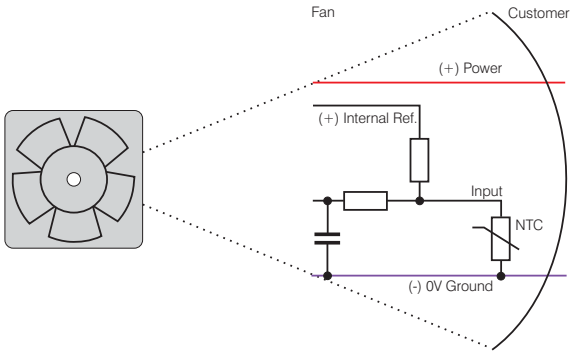

Standard speed-temperature curve for type T and type I

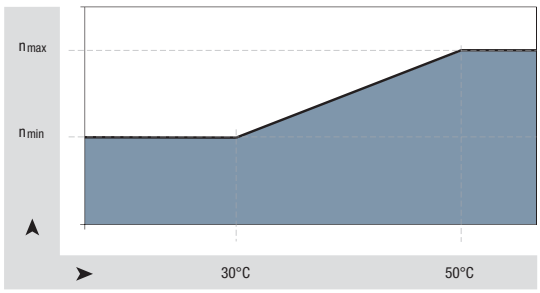

$n_{min} \approx {}^{1}/_{2}\, n_{max}$
$T_{min} \approx$ 30 °C; T_{max} = 50 °C

Optionally available with user-selectable temperature-speed curve control

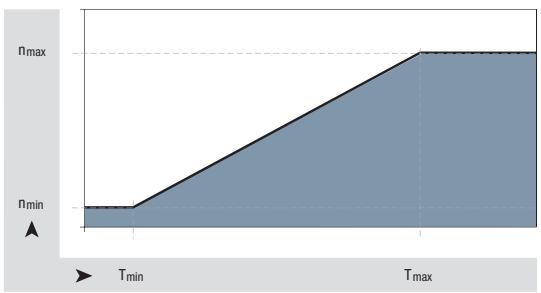

$n_{min} \approx 800\ {}^{1}/_{min}$ n_{max} model-dependent
$T_{min} \approx$ 5 °C $T_{max} \leq$ 85 °C, model-dependent

Speed setting
with control voltage or PWM

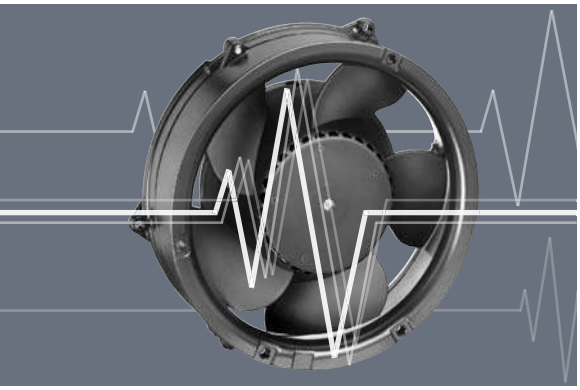

– The control variable is a PWM signal or analogue control voltage.

Speed setting via control voltage Type A

– Standard control range 0 ... 5 V.

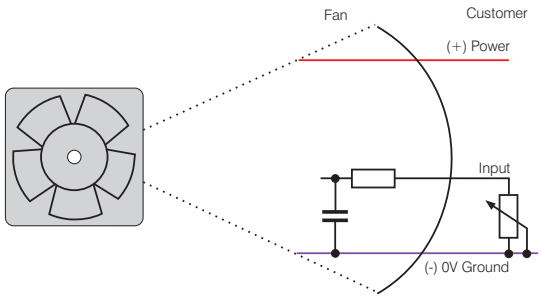

– Optional control range 0 ... 10 V.

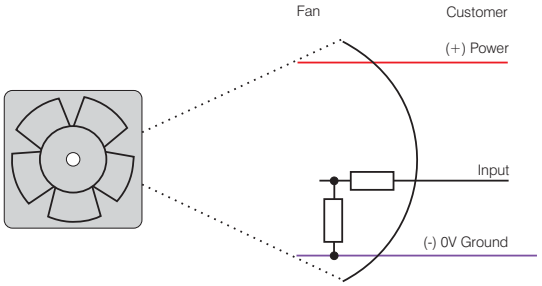

Speed setting via PWM Type P

– Standard PWM signal in 2 versions
  a) PWM frequency 2kHz (0-100%), Open collector input
  b) 4-Wire interface to Intel specification for 12 VDC fan, PWM frequency 20 kHz, incl. speed signal /2

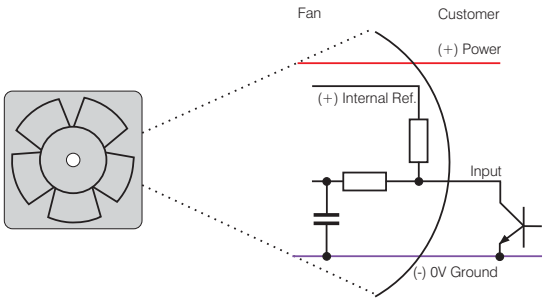

Standard curve P / A

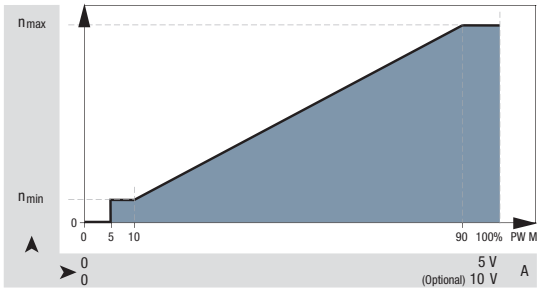

Optional – selectable curve P / A

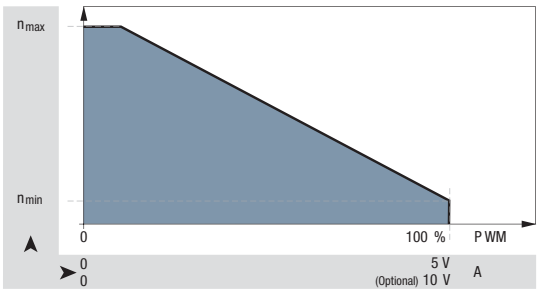

Speed setting via multi-option control input

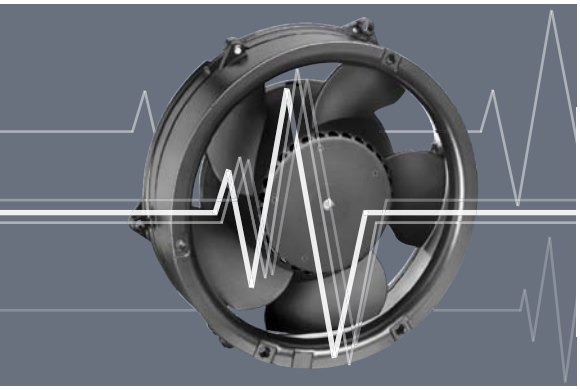

– Customer can operate input either with PWM signal, analogue voltage, external temperature control module or resistor.
– The control signal-speed characteristics of the fan differ from the standard curve of the A and P inputs (see p. 121).
– To attain the maximum speed, the control wire must be switched against UB.
– The control input is usually combined with an open collector tachometer (Type /2, see page 110).

Speed setting via multi-option control input

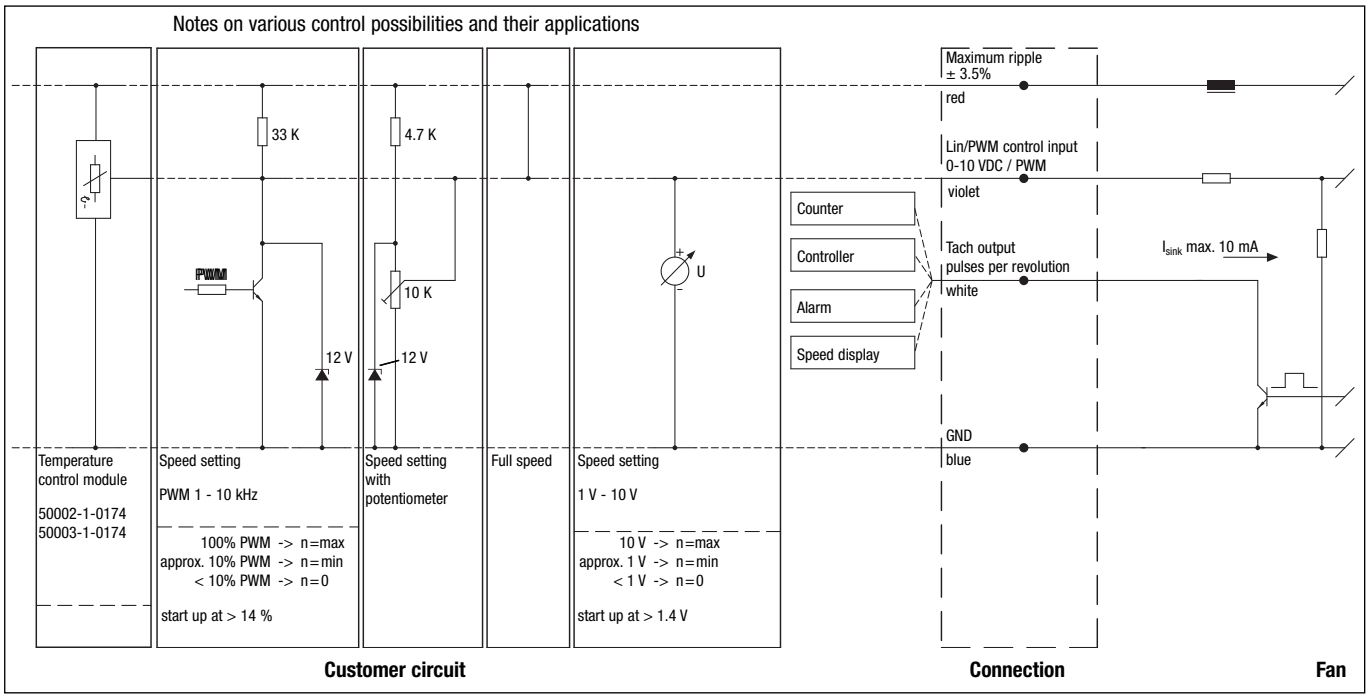

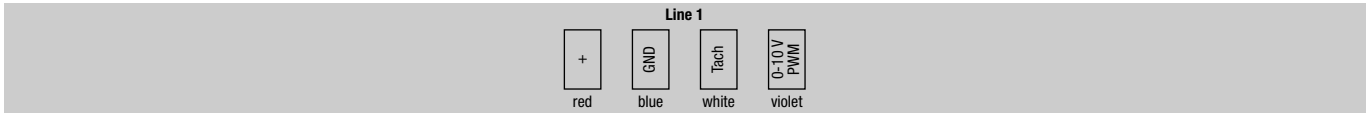

Line	Connection	Colour	Assignment / function
1	+	red	Maximum ripple ± 3.5 %
	GND	blue	GND

Line	Connection	Colour	Assignment / function
1	Tach	white	Tach output:
			3 pulses / revolution
	0-10 V / PWM	violet	Control input (Impedance 100 kΩ)

Protected fans

against environmental influences

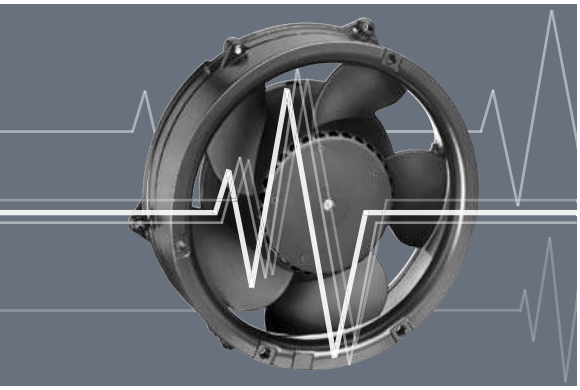

– Meeting special requirements for a broad range of applications.
– Resistant to environmental influences, such as dust, splash water, humidity, spray water and salt spray fog.
– Highly competent solutions for adapting fans to environmental conditions.

Moisture protection
A coating on the motor and printed circuit board protects against humidity and condensation.

IP 54 protection
The motor and circuit board are coated to protect them against splash water and humidity. High protection classes up to IP 67 are available on request.

Salt spray fog protection
Salt spray fog is extremely demanding on the resistance of the product. ebm-papst makes use of technologies that protect fans and blowers from salt spray fog reliably and durably.

Stainless steel bearings
Special bearings made of stainless steel provide additional protection.

The solutions that are available and in use can differ depending on size. We would be glad to develop solutions tailored to the demands of your application.









ACmaxx / GreenTech EC-compact fans

	ACmaxx / GreenTech EC-compact fans technical information	126
	ACmaxx / GreenTech EC-compact fans overview	130
	ACmaxx / GreenTech EC-compact fans axial fans	131

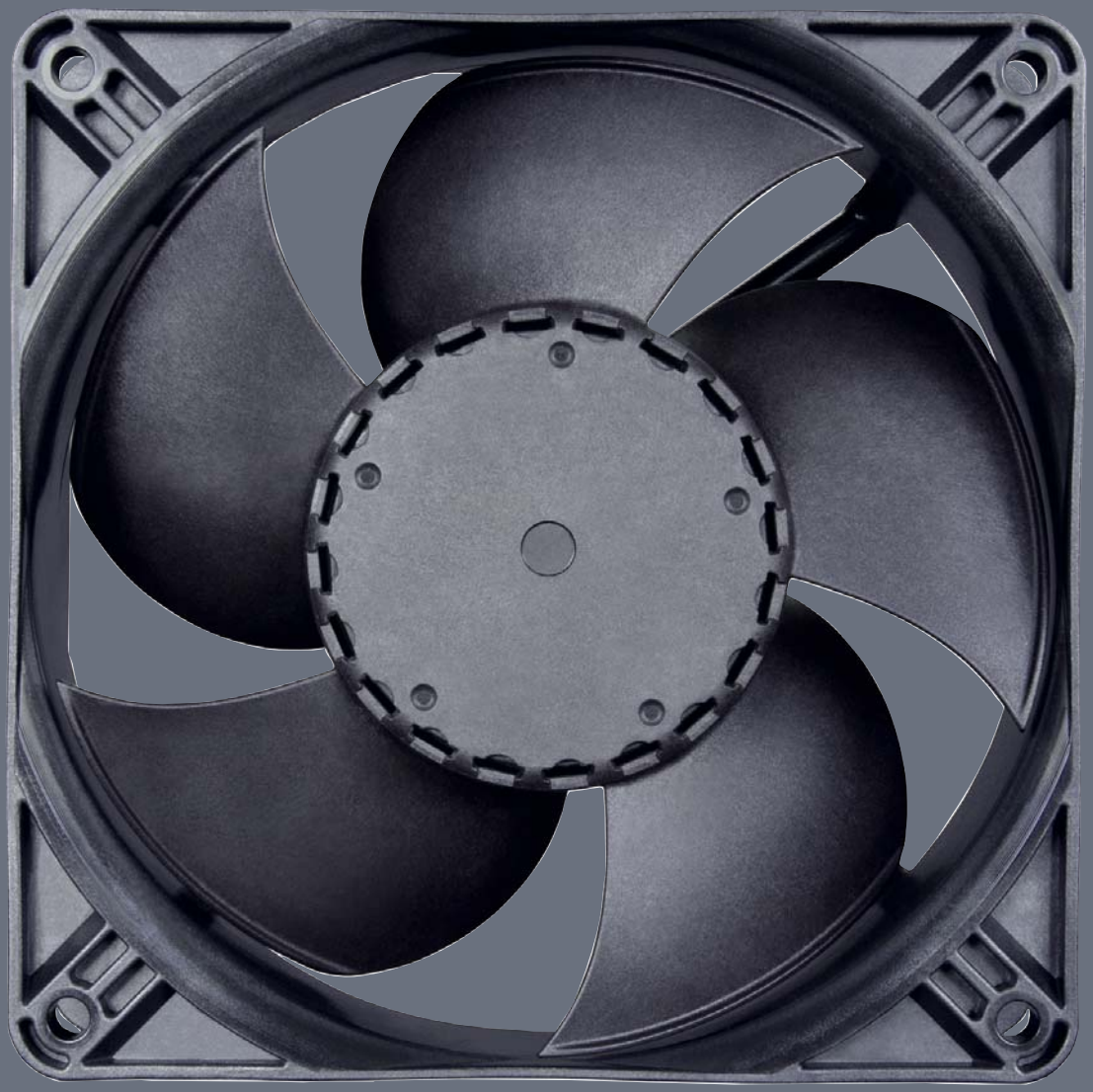

Technical information

Progress made by ebm-papst

The best example: The ACmaxx fans from ebm-papst, which, thanks to an ingenious yet simple improvement over conventional AC fans, provide substantial benefits.
The aim in developing the new ACmaxx series was to raise the technology standard of the conventional AC fan significantly and, in the process, facilitate the transition to the new technology by retaining the overall mounting dimensions. In short, to ensure the fans can be replaced 1:1 without any peripheral changes or changes to the voltage situation.
ebm-papst offers two generations of ACmaxx products that meet different needs.



What ACmaxx and GreenTech EC-compact fan have in common:

Energy efficiency

The drive concept is based on state-of-the-art GreenTech EC technology with outstanding motor efficiency. Compared to AC fans of the same size, ACmaxx energy consumption is up to 77% lower–for higher cooling capacity! The energy balance alone means that the products pay for themselves after only a few months. The savings over the entire service life, especially in systems with multiple fans, is considerable.

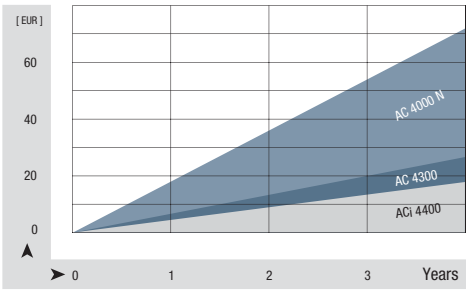

Independent of mains frequency and mains voltage

The ACmaxx and GreenTech EC-compact fans are prepared for direct connection to all AC voltages and frequencies. The speed, and thus important properties of the fan such as air flow and noise, are independent of the power frequency and do not change, even within the defined voltage range. Voltage fluctuations in the power system are automatically compensated for.

Long service life

The efficiency of ACmaxx and GreenTech EC-compact fan motors is up to 75% higher than that of conventional AC fan variants. This not only saves energy, it also means less intrinsic heating in the motor. The reduced heating has a direct, positive effect on the bearing system, which is why the fans have a service life that is up to 85% longer! This also lengthens the service and maintenance intervals significantly. The expense of replacement fans, and even more expensive downtimes, are kept to a manageable minimum.

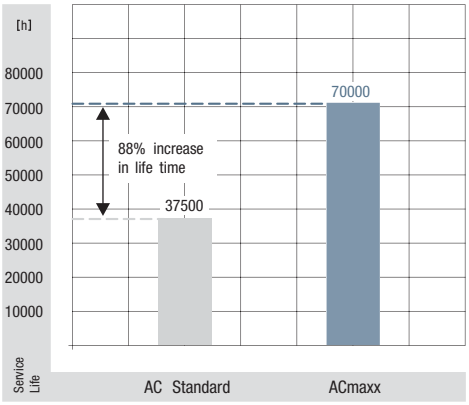

ACmaxx / GreenTech EC-compact fans

Safety

- Safety certifications: UL, CSA and VDE 0805 / EN60950. VDE 0700 / EN60335 on request.
- Our fans have the CE mark of conformity.
- EMC protection:
  > EN61000-4-4 Level 1 (1 kV or 2 kV)B
  > EN61000-4-2 Level 8 kV/15 kV or 4 kV/8 kV
  > EN61000-4-3
  > EN61000-4-6
  > EN61000-4-8
  > EN55022 Class B

Ambient influences

AC fans are extremely common and are used in a wide variety of applications. In control cabinet cooling, beer coolers, cooling cabinets, wood-burning stoves, medical devices – all have different requirements for resistance to ambient influences. ACmaxx and GreenTech EC-compact fans offer the same features for protection against moisture, splash water and rough ambient conditions.

Particular design features of the GreenTech EC-compact fans (ACi 4400):

GreenTech EC-compact fans is more compact!

As large as existing AC fans – and not a bit larger. This is the most outstanding feature of the new GreenTech EC-compact fans ACi 4400. Even in the hub area, the fan does not differ from typical 119x119x38 mm AC fans. Out with the AC, in with the GreenTech EC-compact fans ACi 4400 – it's that simple.



ACmaxx GreenTech EC-compact fans

GreenTech EC-compact fans is more efficient!

ACmaxx saves energy, and the GreenTech EC-compact fans generation saves even more. While an AC fan at 50 Hz can barely reach an overall efficiency of 5-6%, the ACmaxx makes it to approx. 20-25%. With the new GreenTech EC-compact fans ACi 4400, a remarkable level of up to 30% is reached. This is the result of the optimisation of the entire package made up of drive, electronics, AC/DC conversion and aerodynamics. Thus the new GreenTech EC-compact fans series boasts energy savings of almost 75% compared to the corresponding AC fan, thus providing significantly-higher savings than the 40% level of the old AC 4300 generation.

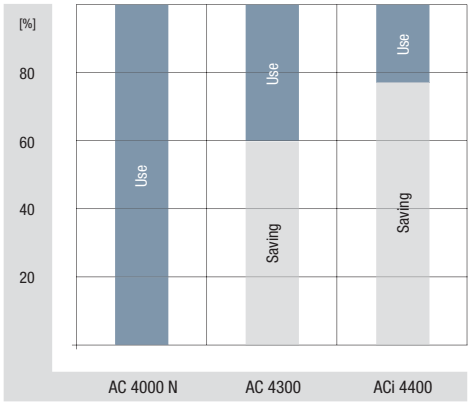

GreenTech EC-compact fan is quieter!

The GreenTech EC-compact fan ACi 4400 is quieter! Quieter than AC fans and quieter than the existing ACmaxx generation. The reason for this is the optimised aerodynamics and the drive, which is optimised for minimum structure-borne noise. Thus the fan is only half as loud at comparable air performance, and is up to 6 dB(A) quieter at some operating points.

Speed independent of voltage and frequency

For the GreenTech EC-compact fans ACi 4400, the speed, and thus the air flow and operating noise, are independent of the supply voltage and power frequency.
Versions are available for 115 VAC with a voltage range from 85 to 132 VAC and 230 VAC with a voltage range of 195 to 265 VAC. Voltage fluctuations and frequency differences in the power system are compensated for automatically.

Technical information

Particular design features of the ACmaxx:

Prepared for all AC voltages
These models have a very wide voltage range from 85 to 265 VAC – the global voltage range, so to speak. This enables the fan to be used around the world, opening up large savings potentials. In addition to reduced logistics effort and stock-keeping, worldwide availability is key. ACmaxx is compatible with every supply voltage–no switching needed. From 85 to 265 volts and mains frequencies of 50 and 60 hertz. Voltage fluctuations in the power system are automatically compensated for.

Higher performance
Unlike conventional AC technology, the state-of-the-art drive concept of this fan series is not linked to a fixed power frequency. This allows the motor speed to be increased over a wide range. Thus ACmaxx provides significantly higher air flow and significantly increased pressure.

Higher flexibility
The flexibility of ACmaxx is one-of-a-kind. With its intelligent features, ACmaxx can be individually adapted to the specific application: standby mode, overload mode at peak times or night reduction all the way to temperature-controlled quiet operation are all possible. From speed setting to alarm or speed signal outputs, ACmaxx offers optional interfaces with which you can quickly and easily implement operation monitoring.

You can find further information about these fan options in the "Specialised fans" chapter, starting on page 107.

Or you can simply contact our application engineers to discuss your ideal ACmaxx or GreenTech EC-compact fan.

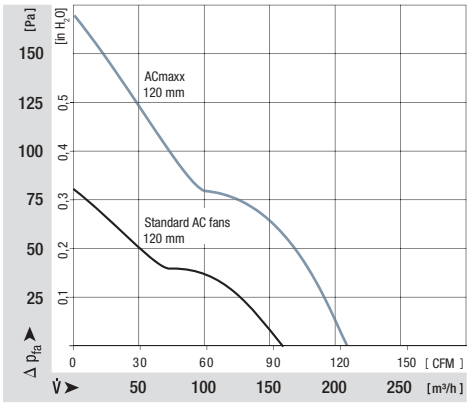



ebmpapst

Optional special versions

Information on pictograms

On the pages of the catalogue and on the following overview pages, the pictograms illustrated below provide information about technically possible special versions in the fan line presented.
Please note that these special versions are not possible for all voltages and speeds, and not in all combinations.
The special versions are designed for specific customers and projects and are not usually available off the shelf.



Speed signal
The fan uses a separate wire to output information about its speed, and thus about the speed of the rotor. For technical details, please refer to page 110.



Go / No-go alarm
The fan uses a separate wire to output a static signal when it is stationary, thus providing information about whether or not the rotor is turning. For technical details, please refer to page 117.



Alarm with limit speed
If the speed drops below a certain level defined in the fan's electronics, the fan will emit a static signal, thus providing information about whether or not the rotor is turning. For technical details, please refer to page 114.



External temperature sensor
An NTC is connected to the fan via a separate wire and the fan changes its speed depending on the temperature at the NTC. For technical details, please refer to page 120.



Internal temperature sensor
In this case, the NTC is integrated into the fan and the fan changes its speed depending on the temperature at the NTC. For technical details, please refer to page 120.



PWM control input
The speed of the fan can be changed via a pulse-width-modulated signal. This signal is applied to a specially provided wire. For technical details, please refer to page 121.



Analogue control input
The speed of the fan can be changed via a control voltage. This control voltage is applied to a specially provided wire. For technical details, please refer to page 121.



Multi-option control input
The fan has a control input that the user can trigger either using a PWM signal, an analogue signal or a resistor. For technical details, please refer to page 122.



Protection against moisture
Protection for the fan's electronics against moisture and condensation. For technical details, please refer to page 123.



IP 54
Protection of motor and PCB board against splashed water and humidity. For technical details, please refer to page 123.



Protection against salt spray fog
Protection of fan against the damaging effects of salt spray fog. For technical details, please refer to page 123.

Fans for AC operation

Overview of air performance

Dimension	Series	Air flow	Page
mm		m^3/h	
□ 80 x 32	AC 8300 H	80	131
□ 92 x 38	AC 3200 J	144	132
□ 119 x 25	AC 4400 FN	205	133
□ 119 x 32	AC 4300 H	204	134
NEW □ 119 x 38	ACi 4400	100..180	135
172 Ø x 51	AC 6100 N	350	136
172 Ø x 51	AC 6200 N	350	137
NEW 98,5 Ø x 130	AC 100 NR	80..135	138

Overview of technically feasible designs

Dimension	Series	VDE, UL, CSA	Sintec sleeve bearings / ball bearings	Sensor	Go / No-go alarm	Alarm with limit speed	External temperature sensor	Internal temperature sensor	PWM control input	Analogue control input	Multi-option control input	Humidity protection	IP >= IP54	Salt spray fog protection	Page
ACmaxx / GreenTech EC-compact fans Axial fans															
				OPTIONAL											
Series	mm														P.
AC 8300 H	80 x 80 x 32	*	■	•	•	•	•	•	•	•	–	•	•	•	131
AC 3200 J	92 x 92 x 38	*	■	•	•	•	•	•	•	•	–	•	•	•	132
AC 4400 FN	119 x 119 x 25	*	■	•	•	•	•	•	•	•	–	•	–	–	133
AC 4300	119 x 119 x 32	*	■	•	•	•	•	•	•	•	–	•	•	•	134
NEW ACi 4400	119 x 119 x 38		■	–	–	–	–	–	–	–	–	•	•	•	135
AC 6100 N	172 Ø x 51	*	■	•	•	•	•	•	•	•	–	•	•	•	136
AC 6200 N	172 Ø x 51	*	■	•	•	•	•	•	•	•	–	•	•	•	137
NEW AC 100	100 Ø x 130		■	–	–	–	–	–	–	–	–	•	•	–	138

– not yet available
• available
▫ Sleeve bearings
■ Ball bearings

* Partially granted, partially in registration stage.

Please note that these special versions are not possible for all voltages and speeds, and not in all combinations. The special versions are designed for specific customers and projects. As a rule they are not available off the shelf and are tied to minimum volumes.
Please consult your customer support representative about the feasibility of your special variant.

max. 80 m^3/h

ACmaxx axial fans

Series AC 8300 H 80 x 80 x 32 mm



Highlights:
- Universally suitable for all AC voltages between 85 and 265 V.
- Fan speed not dependent on line frequency.
- Significantly reduced power consumption compared to conventional AC fans.
- Open loop speed control, sensor and alarm signal possible on request.

General attributes:
- Material: fibreglass-reinforced plastic. PA impeller, PBTP housing.
- Fully integrated electronic commutation.
- Protected against locking.
- Connection via single strands AWG 22, TR 64. Bared and tin-plated.
- Air exhaust over struts. Direction of rotation clockwise, seen on rotor.
- Mass: 325 g.

Nominal data	Air flow	Air flow	Nominal voltage	Frequency	Voltage range	Sound pressure level	Sound power level	Sintec sleeve bearings Ball bearings	Power input	Nominal speed	Temperature range	Service life L_{10} at 40 °C	at T max	Curve
Type	**m^3/h**	**CFM**	**V**	**Hz**	**VAC**	**dB(A)**	**Bel(A)**	**□/■**	**Watts**	**RPM**	**°C**	**Hours**	**Hours**	
AC 8300 H	80	47,1	**115 / 230**	**50 / 60**	85 ... 265	48	6,2	■	7,5	5 000	-20...+75	55 000 / 25 000		1

Speed variants available on request.

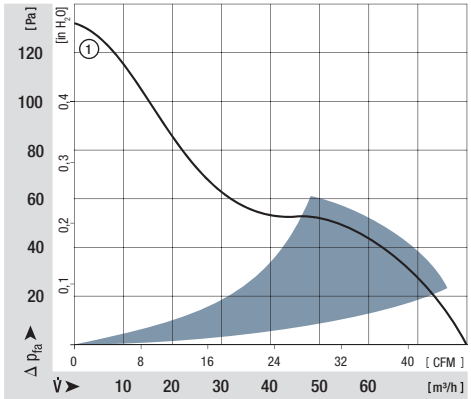

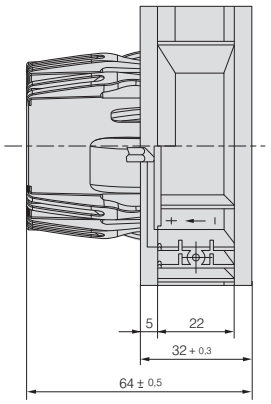

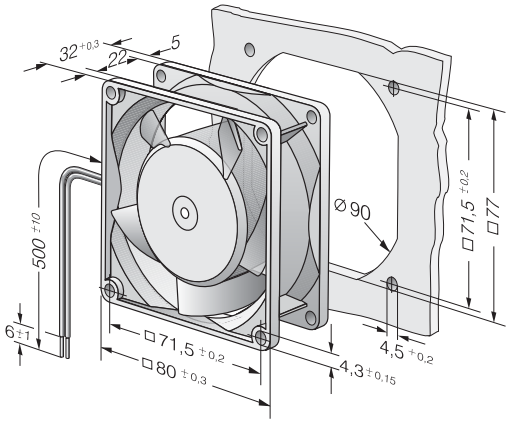

max. 144 m^3/h

ACmaxx axial fans

Series AC 3200 J 92 x 92 x 38 mm

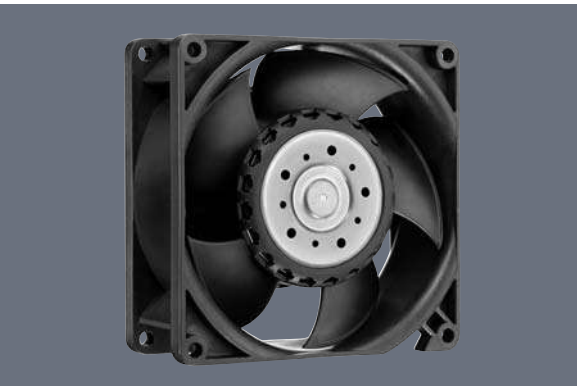

Highlights

- Universally suitable for all AC voltages between 85 and 265 V.
- Fan speed independent of power frequency.
- Significantly reduced power consumption compared to conventional AC fans.
- Open loop speed control, sensor and alarm signal possible on request.
- Rigid compression curve for high air flow at high back pressure.
- Innovative impeller with winglets for low noise levels.

General attributes:

- Material: fibreglass-reinforced plastic. PA impeller, PBTP housing.
- Fully integrated electronic commutation. Protected against locking.
- Connection via single strands AWG 22, TR 64. Bared and tin-plated.
- Air exhaust over struts. Direction of rotation clockwise, seen on rotor.
- Mass: 325 g.

Nominal data	Air flow	Air flow	Nominal voltage	Frequency	Voltage range	Sound pressure level	Sound power level	Sintec sleeve bearings / Ball bearings	Power input	Nominal speed	Temperature range	Service life L_{10} at 40 °C	at T_{max}	Curve
Type	**m^3/h**	**CFM**	**V**	**Hz**	**VAC**	**dB(A)**	**Bel(A)**	**□/■**	**Watts**	**RPM**	**°C**	**Hours**	**Hours**	
AC 3200 JH	144	84,8	**115 / 230**	**50 / 60**	85 ... 265	55	6,4	■	11	6 800	-20...+70	70 000 / 35 000		1

Speed variants available on request.

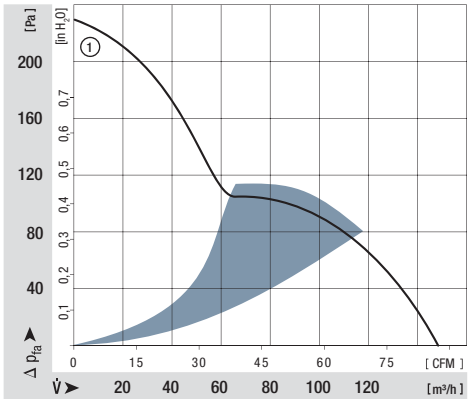

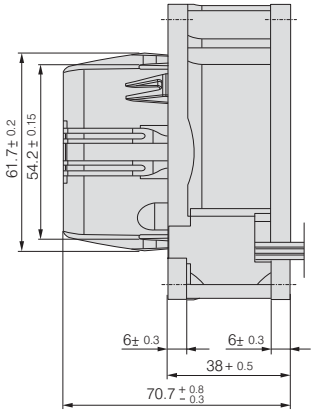

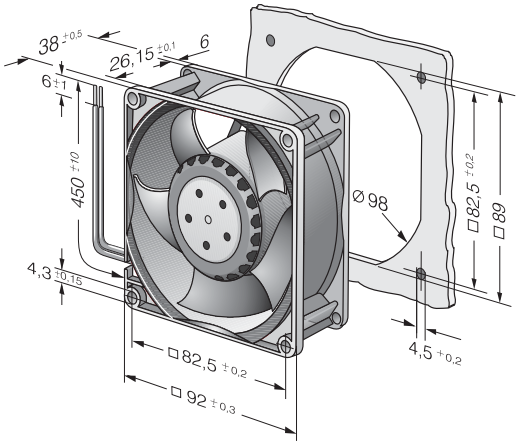

NG IT II PWM A HP IP54 SP

ebmpapst

max. 205 m^3/h

ACmaxx axial fans

Series AC 4400 FN 119 x 119 x 25 mm



Highlights:

- Universally suitable for all AC voltages between 85 and 265 V.
- Fan speed independent of power frequency.
- Significantly reduced power consumption compared to conventional AC fans.
- Open loop speed control, sensor and alarm signal possible on request.
- Rigid compression curve for high air flow at high back pressure.
- Innovative impeller with winglets for low noise levels.

General attributes:

- Material: fibreglass-reinforced plastic. PA impeller, PBTP housing.
- Fully integrated electronic commutation. Protected against locking.
- Connection via single strands AWG 22, TR 64. Bared and tin-plated.
- Air exhaust over struts. Direction of rotation counter-clockwise, seen on rotor.
- Mass: 370 g..

Nominal data	Air flow	Air flow	Nominal voltage	Frequency	Voltage range	Sound pressure level	Sound power level	Sintec sleeve bearings Ball bearings	Power input	Nominal speed	Temperature range	Service life L_{10} at 40 °C	at T_{max}	Curve
Type	**m^3/h**	**CFM**	**V**	**Hz**	**VAC**	**dB(A)**	**Bel(A)**	**□/■**	**Watts**	**RPM**	**°C**	**Hours**	**Hours**	
AC 4400 FNN	205	120,7	**115 / 230**	**50 / 60**	85 ... 265	53	6,2	■	12	4 850	-20...+70	60 000 / 30 000		1

Speed variants available on request.

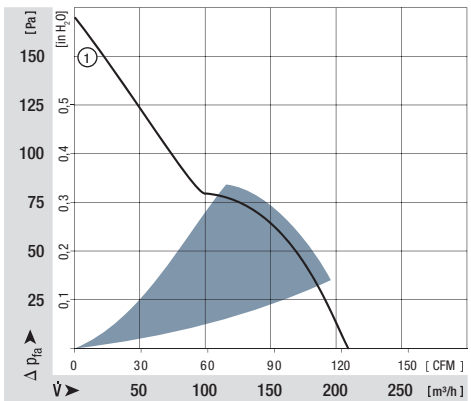

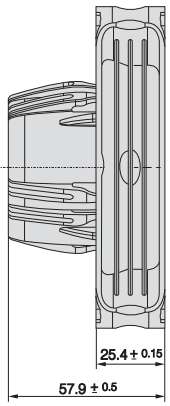

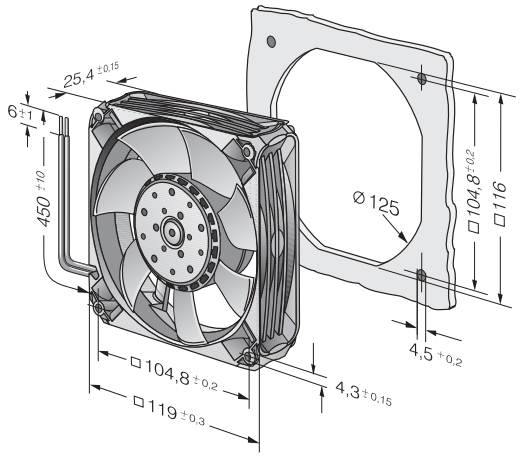

max. 204 m^3/h

ACmaxx axial fans

Series AC 4300 119 x 119 x 32 mm



Highlights:

- Universally suitable for all AC voltages between 85 and 265 V.
- Fan speed independent of power frequency.
- Significantly reduced power consumption compared to conventional AC fans.
- Open loop speed control, sensor and alarm signal possible on request.

General attributes:

- Material: fibreglass-reinforced plastic. PA impeller, PBTP housing.
- Fully integrated electronic commutation.
- Protected against locking.
- Connection via single strands AWG 22, TR 64. Bared and tin-plated.
- Air exhaust over struts. Direction of rotation clockwise, seen on rotor.
- Mass: 325 g.

Nominal data	Air flow	Air flow	Nominal voltage	Frequency	Voltage range	Sound pressure level	Sound power level	Sintec sleeve bearings / Ball bearings	Power input	Nominal speed	Temperature range	Service life L_{10} at 40 °C	at T_{max}	Curve
Type	**m^3/h**	**CFM**	**V**	**Hz**	**VAC**	**dB(A)**	**Bel(A)**	**□/■**	**Watts**	**RPM**	**°C**	**Hours**	**Hours**	
AC 4300 H	204	120,1	**115 / 230**	**50 / 60**	85 ... 265	51	6,4	■	11	3 400	-20...+70	45 000 / 22 500		1

Speed variants available on request.

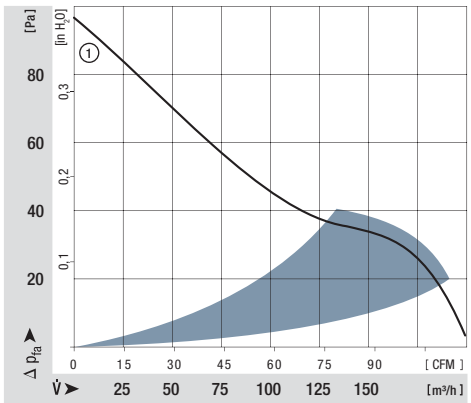

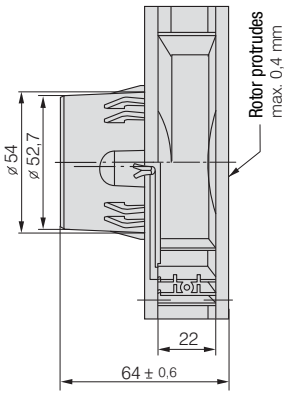

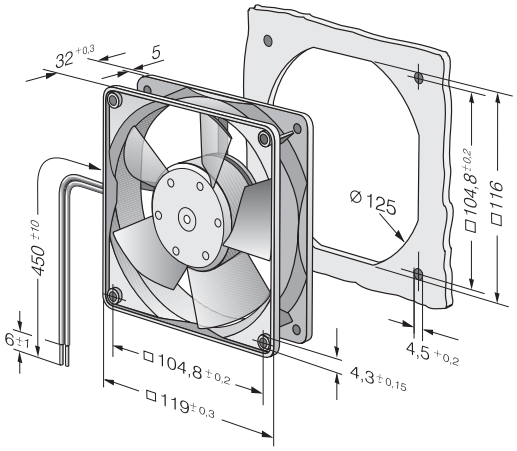

ebmpapst

max. 180 m^3/h

GreenTech EC-compact fans axial fans

Series ACi 4400 119 x 119 x 38 mm

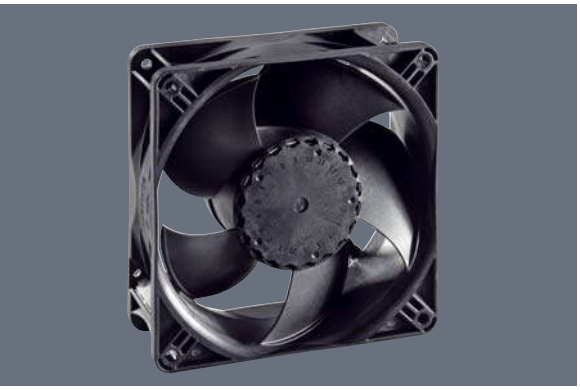

Highlights:

- Energy efficient AC fan with EC technology.
- Conversion and drive electronics fully integrated.
- Significant lower power consumption than **existing** AC fans.
- Significantly lower noise than existing AC fans.
- Significant higher service life than existing AC fans.
- Fan speed not dependent on line frequency.

General characteristics:

- Material: fibreglass-reinforced plastic. Impeller PA, housing PBT.
- Electronic locked rotor protection.
- Electrical connection via 2 flat plugs 2,8 x 0,5 mm, flying leads optional.
- Air exhaust over struts, direction of rotation clockwise, seen on rotor.
- Mass: 250 g.

Nominal data	Air flow	Air flow	Nominal voltage	Voltage range	Sound pressure level	Sound power level	Sintec sleeve bearings / Ball bearings	Power input	Nominal speed	Temperature range	Service life L_{10} (40 °C) ebm-papst Standard	Service life L_{10} (T_{max}) ebm-papst Standard	Life expectancy $L_{10\Delta}$ (40 °C)	Curve
Type	**m^3/h**	**CFM**	**VAC**	**VAC**	**dB(A)**	**Bel(A)**	**□ / ■**	**Watts**	**RPM**	**°C**	**Hours**		**Hours**	
NEW ACi 4420 ML	100	58,8	**230**	195...265	25	4,1	■	1,4	1 850	-20...+75	80 000 / 30 000		160 000	1
NEW ACi 4420 H	160	94,1	**230**	195...265	39	5,1	■	3,3	3 000	-20...+75	70 000 / 30 000		140 000	2
NEW ACi 4420 HH	180	105,9	**230**	195...265	42	5,3	■	4,4	3 350	-20...+75	62 500 / 30 000		125 000	3
NEW ACi 4410 HH	180	105,9	**115**	85...132	42	5,3	■	4,4	3 350	-20...+75	62 500 / 30 000		125 000	3

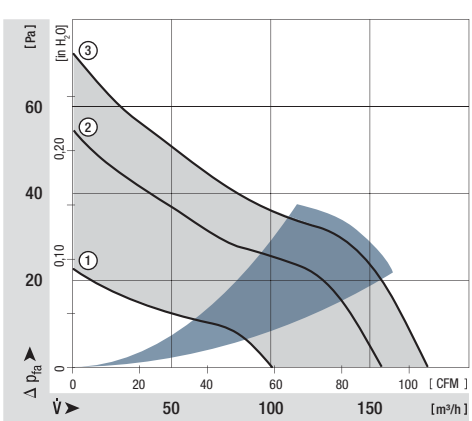

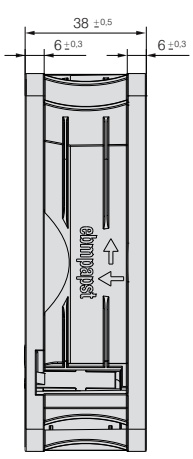

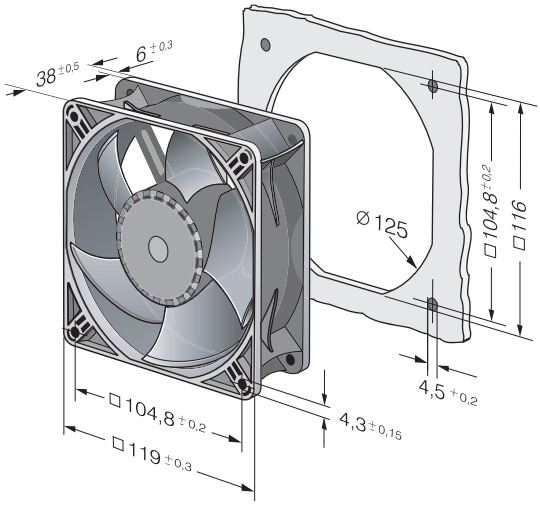

max. 350 m^3/h

ACmaxx axial fans

Series AC 6100 N 172 ø x 51 mm



Highlights:
- Universally suitable for all AC voltages between 85 and 265 V.
- Fan speed independent of power frequency.
- Significantly reduced power consumption compared to conventional AC fans.
- Open loop speed control, sensor and alarm signal possible on request.

General attributes:
- Material: fibreglass-reinforced PA housing and impeller.
- Fully integrated electronic commutation.
- Protected against locking.
- Connection via single strands AWG 22, TR 64. Bared and tin-plated.
- Air exhaust over struts. Direction of rotation clockwise, seen on rotor.
- Mass: 760 g.

Nominal data	Air flow	Air flow	Nominal voltage	Frequency	Voltage range	Sound pressure level	Sound power level	Sintec sleeve bearings / Ball bearings	Power input	Nominal speed	Temperature range	Service life L_{10} at 40 °C	at T_{max}	Curve
Type	**m^3/h**	**CFM**	**V**	**Hz**	**VAC**	**dB(A)**	**Bel(A)**	**□/■**	**Watts**	**RPM**	**°C**	**Hours**	**Hours**	
AC 6100 NM	350	206,0	**115 / 230**	**50 / 60**	85 ... 265	52	6,1	■	14	2 850	-20...+70	80 000 / 37 500		1

Speed variants available on request.

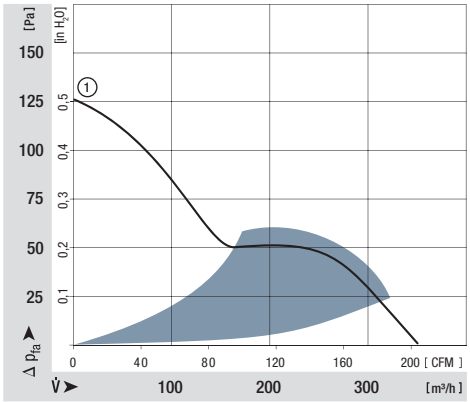

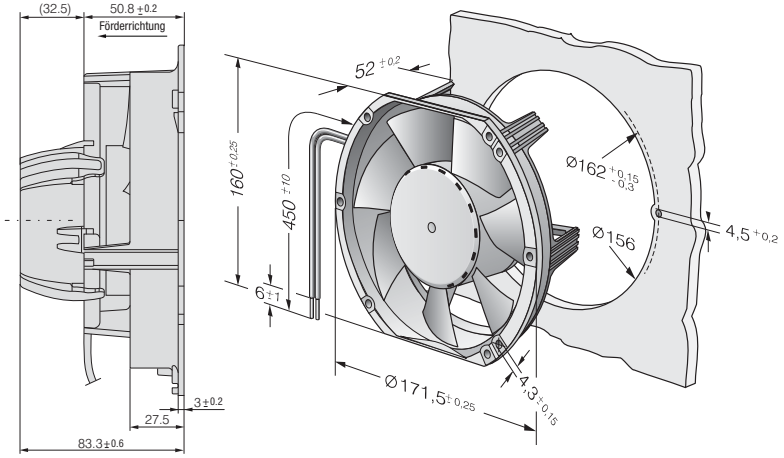

ebmpapst

max. 350 m^3/h

ACmaxx axial fans

Series AC 6200 N 172 ø x 51 mm



Highlights:

- Universally suitable for all AC voltages between 85 and 265 V, 50-60 Hz.
- Fan speed independent of power frequency.
- Significantly reduced power consumption compared to conventional AC fans.
- Significantly reduced power consumption compared to conventional AC fans.
- Open loop speed control, sensor and alarm signal possible on request.

General attributes:

- Material: aluminium housing, fibreglass-reinforced PA impeller. Housing with grounding lug for screw M4 x 8 (Torx).
- Fully integrated electronic commutation.
- Protected against locking.
- Connection via single strands AWG 22, TR 64. Bared and tin-plated.
- Air exhaust over struts. Direction of rotation counter-clockwise, seen on rotor.
- Mass: 900 g.

Nominal data	Air flow	Air flow	Nominal voltage	Frequency	Voltage range	Sound pressure level	Sound power level	Sintec sleeve bearings / Ball bearings	Power input	Nominal speed	Temperature range	Service life L_{10} at 40 °C	at T_{max}	Curve
Type	**m^3/h**	**CFM**	**V**	**Hz**	**VAC**	**dB(A)**	**Bel(A)**	**□/■**	**Watts**	**RPM**	**°C**	**Hours**	**Hours**	
AC 6200 NM	350	206,0	**115 / 230**	**50 / 60**	85 ... 265	50	5,7	■	14	2 850	-20...+70	80 000 / 40 000		1

Speed variants available on request.

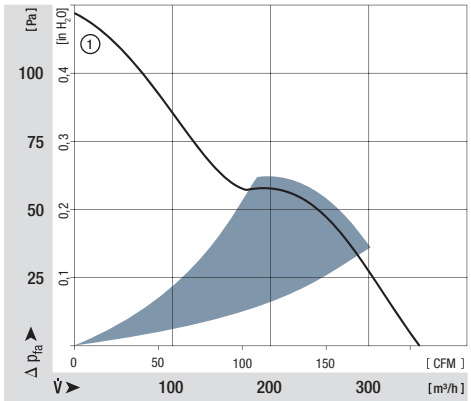

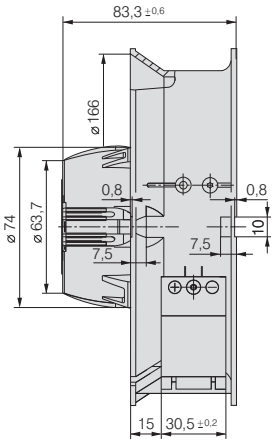

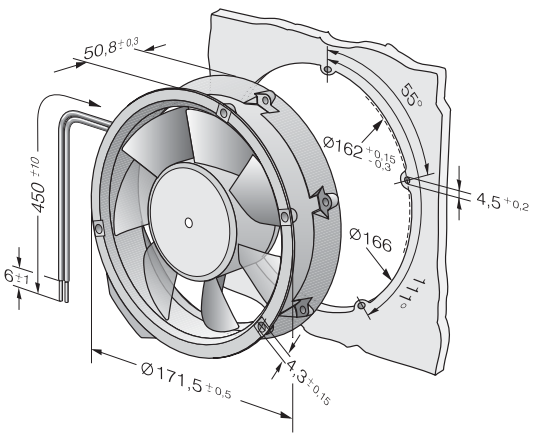

max. 135 m^3/h

ACmaxx in-line duct fan

Series AC 100 NR Ø 98,5 x 130 mm



Highlights:
- Highest energy efficiency thanks to EC technology.
- Protection class IP44 (IP45 possible depending on mounting position).
- Speed-boost function via mains voltage switch.
- Vibration-isolated motor.
- Global voltage - one product applicable for all line voltages and frequencies between 85-265 VAC and 50/60 Hz. Fan speed independent from power frequency.

General features:
- Material: fibreglass-reinforced plastic, housing PP, impeller PA.
- Electrical connection via 3-pole terminal block, max. 1.5 mm^2.
- Protection class 2.
- Approvals: VDE 60335-3-80. UL, CE, CSA on request.
- Mass: 400 g.

Nominal data	Air flow	Air flow	Nominal voltage	Frequency	Voltage range	Sound pressure level	Sound power level	Sintec sleeve bearings Ball bearings	Power input	Nominal speed	Temperature range	Service life L_{10} at 40 °C	at T_{max}	Curve
Type	m^3/h	CFM	V	Hz	VAC	dB(A)	Bel(A)	□/■	Watts	RPM	°C	Hours	Hours	
NEW nominal boost AC 100 NR	80	47,1	**115/230**	50-60	85...265	35	4,7	■	2,5	2 750	-10...+55	70 000 / 40 000		1
	105	61,8				42	5,3		4,5	3 500				2

Optional: Max. speed at 135 m^3/h (Curve 3).

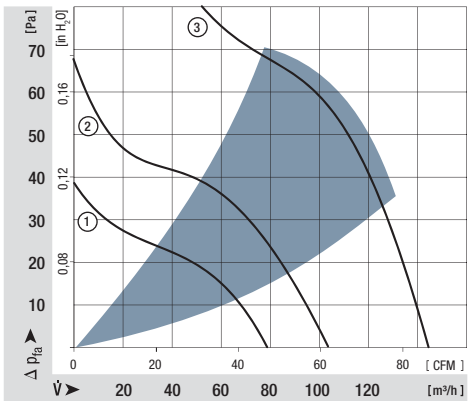

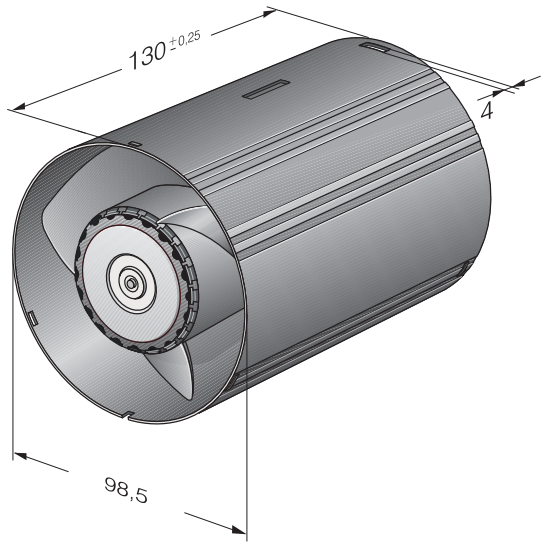

HP IP44

ebmpapst

Highest energy efficiency:	0.03 - 0.045 W/m^3/h free air (Specific fan power).
Boost speed setting:	2 speed settings possible via boost function.
Vibration isolation:	Reduced transmission of vibrations from motor to housing.
Intelligence:	Speed settings and control outputs optional.

Connection



Example 1:
Continuous operation at nominal speed boost speed via light switch.

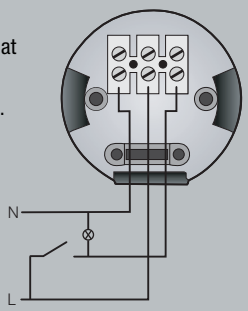

Example 2:
Nominal speed via light switch, separate boost switch.

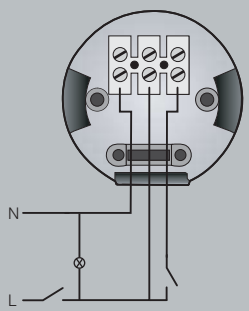

Example 3:
Simple connection, nominal speed without switching.

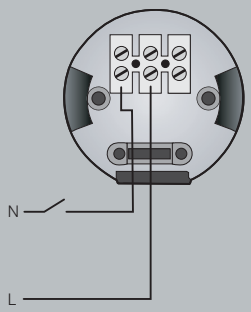

Example 4:
Simple connection, boost speed without switching.

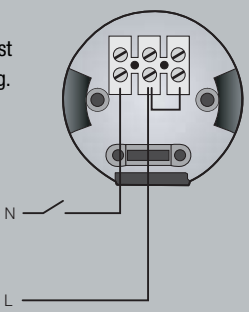

Scope of delivery





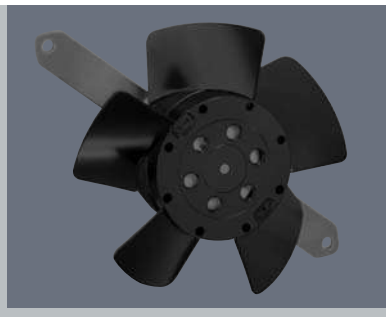

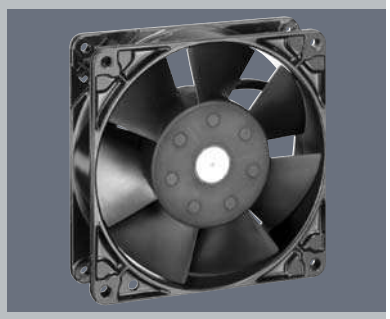

AC axial fans

	AC axial fan overview	143
	AC axial fans	144



AC fans

Technical information

Product line
The renowned ebm-papst AC fans are used when DC voltage is not available. The AC range of fans is based on experience gained from decades of development activity, millions of units in series production and competence in innovation of a world-wide technological leader.

A wide range of fans for AC operation is presented in this catalogue. In addition to complete device fans, you will also find fans without external housing, providing a particularly economical advantage when the air duct can be integrated in the respective device.

Variety of sizes
AC fans are available in a variety of sizes with either air exhaust or air intake over struts. Silent running models with sleeve bearings or for extreme ambient conditions; fans with ball bearings are available with plug connection or external leads.

Shaded-pole or capacitor motors
Fan drives by shaded-pole or capacitor motors, most of which incorporate the world-famous ebm-papst external rotor principle: The fan blades are directly attached to the external rotor of the external rotor motor, thus combining both high performance and profitability.

Flat built AC fans
ebm-papst also has particularly flat built AC fans with internal rotor motor. Their advantage: quick start to full speed. A plastic impeller and the both smaller and lighter internal rotor motor lead to a lower moment of inertia.

Bearings
AC fans with sleeve bearings are powered by Class E insulated motors. Fans with ball bearings are equipped with Class B, E or F insulated motors.

Protection class
All ebm-papst fans conform to the requirements of IP 20. Fans conforming to IP 54 and special types of protection class are also available.

AC voltage
The line of AC fans for Euro voltage according to IEC 60038 (230 V + 6 %, -10 %) is basically also available for 115 V.

Frequencies
AC fans can be operated at frequencies of 50 Hz or 60 Hz. However, their technical data then changes accordingly.

Capacitor
Fans driven by capacitor external motors provide particularly high operating efficiency. Generally, the required operating capacitor is already integrated in the fan housing.

Overloading
Almost all AC fans are protected against overloading (e.g. due to locked rotor) the drive motors are either impedance protected (marked “Impedance protected”, and/or “Z.P.”) or are equipped with a thermal switch (marked “Thermally protected” or “Th.P.”). The model designation of these fans ends with “S”.

Axial fans for AC operation

Overview of air performance

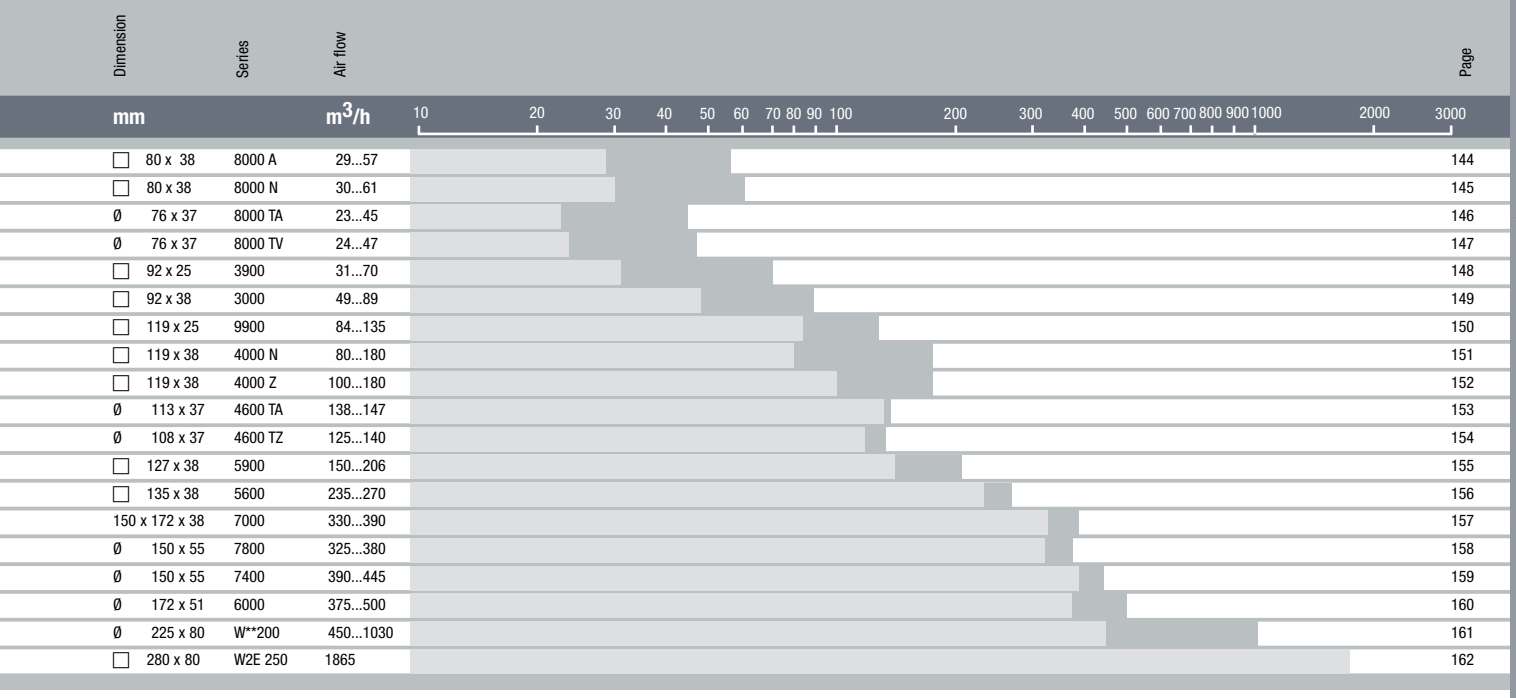

Overview of technically feasible designs

Axial fans

Series	mm	Dimension	VDE, UL, CSA	Sinter sleeve bearings/ ball bearings	OPTIONAL: Speed sensor	Humidity protection	IP >= IP54	Salt spray fog protection	P.
8000 A	80 x 80 x 38		yes	□/■	–	•	•	•	144
8000 N	80 x 80 x 38		yes	□/■	–	•	•	•	145
8000 TA	76 Ø x 37		yes	□/■	–	•	•	•	146
8000 TV	76 Ø x 37		yes	□/■	–	•	•	•	147
3900	92 x 92 x 25		yes	□/■	–	•	–	–	148
3000	92 x 92 x 38		yes	□/■	–	•	•	•	149
9900	119 x 119 x 25		yes	□/■	–	•	–	–	150
4000 N	119 x 119 x 38		yes	□/■	•	•	•	•	151
4000 Z	119 x 119 x 38		yes	□/■	•	•	•	•	152
4600 TA	113 Ø x 37		yes	□/■	–	•	•	•	153
4600 TZ	108 Ø x 37		yes	□/■	–	•	•	•	154
5900	127 x 127 x 38		yes	□/■	–	•	–	–	155
5600	135 x 135 x 38		yes	■	–	•	•	•	156
7000	150 x 172 x 38		yes	■	–	–	–	–	157
7800	150 Ø x 55		yes	■	•	–	–	–	158
7400	150 Ø x 55		yes	■	–	–	–	–	159
6000	172 ¯ x 51		yes	■	–	–	–	–	160

• available – not yet available □ Sleeve bearings ■ Ball bearings

Information on pictograms

On the pages of the catalogue and on the following overview pages, the pictograms illustrated below provide information about technically possible special versions in the fan line presented.
Please note that these special versions are not possible for all voltages and speeds, and not in all combinations.
The special versions are designed for specific customers and projects and are not usually available off the shelf.

Speed signal
The fan uses a separate wire to output information about its speed, and thus about the speed of the rotor. For technical details, please refer to page 110.

Protection against moisture
Protection for the fan's electronics against moisture and condensation. For technical details, please refer to page 123.

IP 54
Protection of motor and PCB board against splashed water and humidity. For technical details, please refer to page 123.

Protection against salt spray fog
Protection of fan against the damaging effects of salt spray fog. For technical details, please refer to page 123.

max. 57 m^3/h

AC axial fans

Series 8000 A 80 x 80 x 38 mm

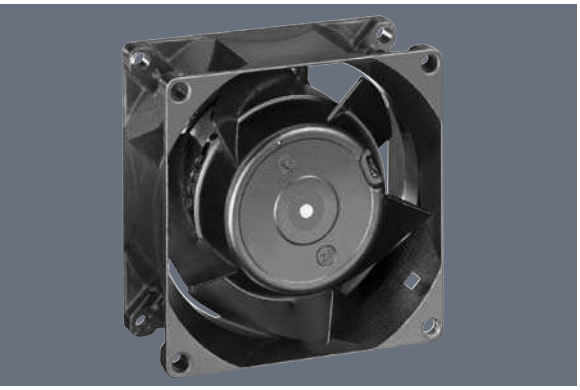

- AC fans with external rotor shaded-pole motor. Impedance protected against overloading.
- Metal fan housing and impeller.
- Air intake over struts. Direction of rotation clockwise, seen on rotor.
- Electrical connection via 2 flat plugs 2.8 x 0.5 mm.
- Fan housing with grounding lug and screw M4 x 8 (TORX).
- Mass: 490 g.
- Optionally available with electrical connection via leads.
- Optionally available with air exhaust over struts and clockwise direction of rotation.
- Please note our new ACmaxx series. With identical mounting dimensions and voltages, this series achieves higher energy efficiency.

Nominal data	Air flow	Air flow	Nominal voltage	Frequency	Sound pressure level	Sound power level	Sintec sleeve bearings / Ball bearings	Power input	Nominal speed	Temperature range	Service life L_{10} at 40 °C	at T_{max}	Curve
Type	**m^3/h**	**CFM**	**V**	**Hz**	**dB(A)**	**Bel(A)**	**□/■**	**Watts**	**RPM**	**°C**	**Hours**	**Hours**	
8880 A	29	17,1	**230**	**50**	26	4,1	□	9,0	1 750	-10...+80	60 000	/ 25 000	1
8850 A	36	21,2	**230**	**50**	31	4,6	□	12,5	2 150	-10...+70	52 500	/ 25 000	2
8550 A	48	28,3	**230**	**50**	36	5,0	□	12,0	2 700	-10...+70	52 500	/ 25 000	3
8556 A	48	28,3	**230**	**50**	37	5,1	■	12,0	2 800	-40...+90	52 500	/ 15 000	3
8830 A	34	20,0	**115**	**60**	29	4,3	□	8,0	1 950	-10...+80	62 500	/ 25 000	4
8800 A	45	26,5	**115**	**60**	34	4,8	□	11,0	2 500	-10...+70	55 000	/ 27 500	5
8500 A	57	33,5	**115**	**60**	41	5,5	□	11,0	3 200	-10...+75	55 000	/ 25 000	6
8506 A	57	33,5	**115**	**60**	42	5,7	■	11,0	3 300	-40...+95	55 000	/ 15 000	6

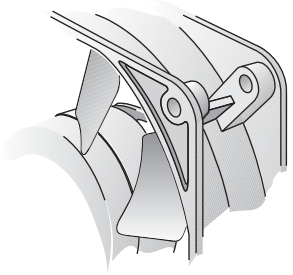

Series 8000 A with reinforced flanges

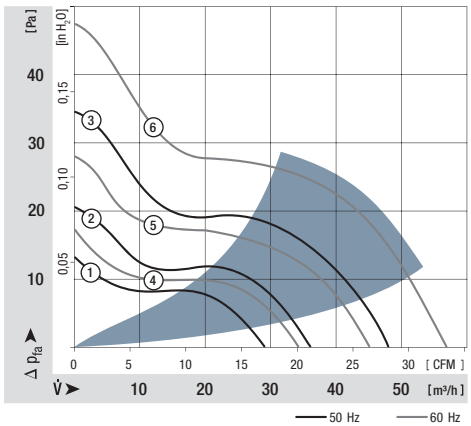

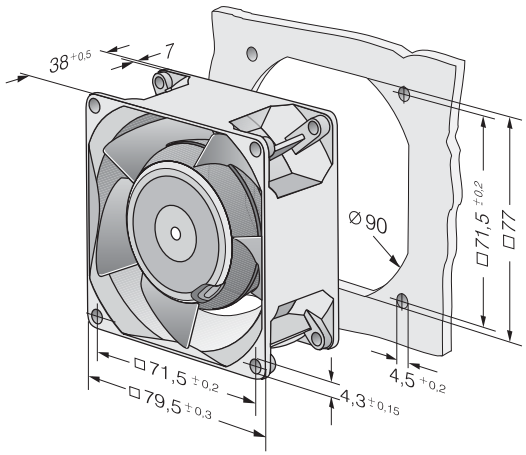

HP IP54 SP

ebmpapst

max. 61 m^3/h

AC axial fans

Series 8000 N 80 x 80 x 38 mm

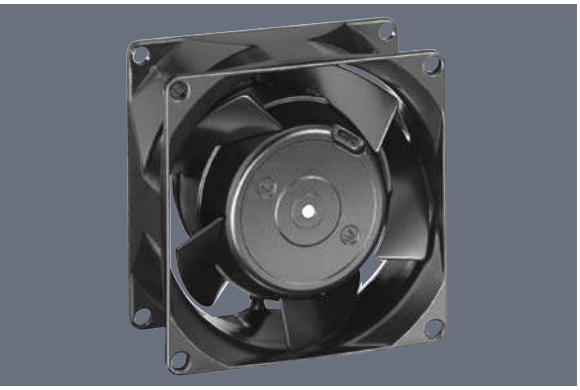

- AC fans with external rotor shaded-pole motor. Impedance protected against overloading.
- Metal fan housing and impeller.
- Air exhaust over struts. Direction of rotation clockwise, seen on rotor.
- Electrical connection via 2 leads. Bared and tin-plated.
- Fan housing with grounding lug for screw M4 x 8 (TORX).
- Mass: 490 g.
- Please note our new ACmaxx series. With identical mounting dimensions and voltages, this series achieves higher energy efficiency.

Nominal data	Air flow	Air flow	Nominal voltage	Frequency	Sound pressure level	Sound power level	Sintec sleeve bearings / Ball bearings	Power input	Nominal speed	Temperature range	Service life L_{10} at 40 °C	at T_{max}	Curve
Type	**m^3/h**	**CFM**	**V**	**Hz**	**dB(A)**	**Bel(A)**	□ / ■	**Watts**	**RPM**	**°C**	**Hours**	**Hours**	
8880 N	30	17,7	**230**	**50**	18	3,3	□	9,0	1 750	-10...+80	60 000 / 25 000		1
8850 N	37	21,8	**230**	**50**	24	3,9	□	12,5	2 150	-10...+70	52 500 / 25 000		2
8550 N	50	29,4	**230**	**50**	30	4,4	□	12,0	2 700	-10...+70	52 500 / 25 000		3
8556 N	50	29,4	**230**	**50**	31	4,5	■	12,0	2 800	-40...+90	52 500 / 15 000		3
8830 N	36	21,2	**115**	**60**	21	3,7	□	8,0	1 950	-10...+80	62 500 / 25 000		4
8800 N	47	27,7	**115**	**60**	28	4,3	□	11,0	2 500	-10...+70	55 000 / 27 500		5
8500 N	61	35,9	**115**	**60**	34	4,8	□	11,0	3 200	-10...+75	55 000 / 25 000		6
8506 N	61	35,9	**115**	**60**	35	5,0	■	11,0	3 300	-40...+95	55 000 / 15 000		6

Fan type				Lead wires	
8830 N	8800 N	8550 N	8500 N	310 mm long	AWG 18, TR 64
8880 N				310 mm long	AWG 18, TR 64
8556 N	8506 N			310 mm long	AWG 22
8850 N				440 mm long	AWG 18, TR 64

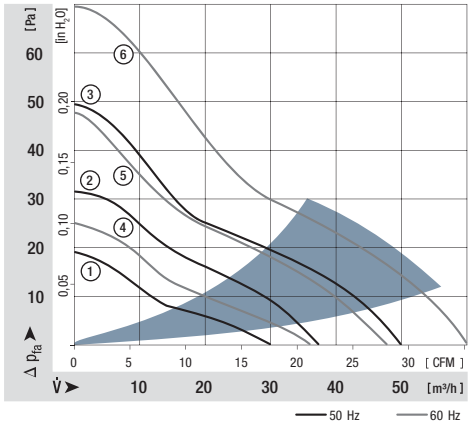

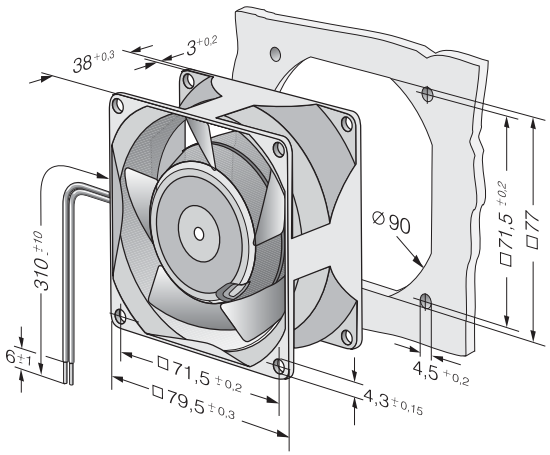

max. 45 m^3/h

AC axial fans

Series 8000 TA 76 Ø x 37 mm

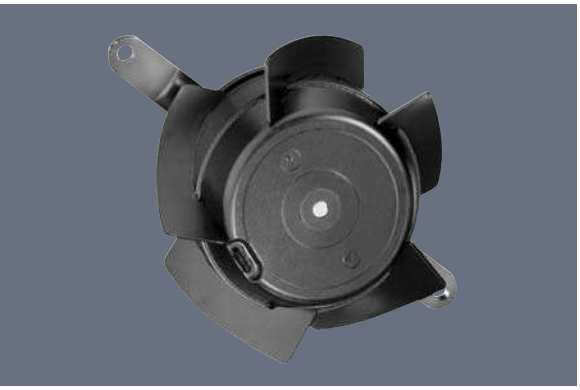

- AC fans with external rotor shaded-pole motor. Impedance protected against overloading.
- Impeller and mounting bracket of metal.
- Air intake over mounting bracket. Direction of rotation clockwise, seen on rotor.
- Electrical connection via 2 leads. Bared and tin-plated.
- Mass: 370 g.
- Please note our new ACmaxx series. With identical mounting dimensions and voltages, this series achieves higher energy efficiency.

Nominal data	Air flow	Air flow	Nominal voltage	Frequency	Sound pressure level	Sintec sleeve bearings / Ball bearings	Power input	Nominal speed	Temperature range	Service life L_{10} at 40 °C at T_{max}	Curve
Type	m^3/h	CFM	V	Hz	dB(A)	□/■	Watts	RPM	°C	Hours Hours	
8880 TA	23	13,5	**230**	**50**	15	□	9,0	1 650	-10...+80	60 000 / 25 000	–
8850 TA	30	17,7	**230**	**50**	19	□	12,0	2 100	-10...+70	52 500 / 25 000	–
8550 TA	38	22,4	**230**	**50**	25	□	12,0	2 650	-10...+70	52 500 / 25 000	–
8556 TA	38	22,4	**230**	**50**	26	■	12,0	2 750	-40...+90	52 500 / 15 000	–
8830 TA	26	15,3	**115**	**60**	18	□	8,0	1 850	-10...+80	62 500 / 25 000	–
8800 TA	34	20,0	**115**	**60**	23	□	11,0	2 450	-10...+70	55 000 / 27 500	–
8500 TA	45	26,5	**115**	**60**	30	□	11,0	3 150	-10...+75	55 000 / 25 000	–
8506 TA	45	26,5	**115**	**60**	31	■	11,0	3 250	-40...+95	55 000 / 15 000	–

The air flow and noise level of fans without external housing depends on the installation conditions. The stated air flow and noise has been measured with an orifice 76.5 mm Ø at a distance of approx. 17 mm from the mounting bracket. Under exceptionally favourable mounting conditions, the air flow of fan series 8000 A is achievable. The noise in the optimal operating range can only be measured for these fans in a specific application.

Fan type				Lead wires	
8880 TA	8850 TA	8830 TA	8800 TA	325 mm long	AWG 18, TR 64
8550 TA	8500 TA			325 mm long	AWG 18, TR 64
8556 TA	8506 TA			325 mm long	AWG 18

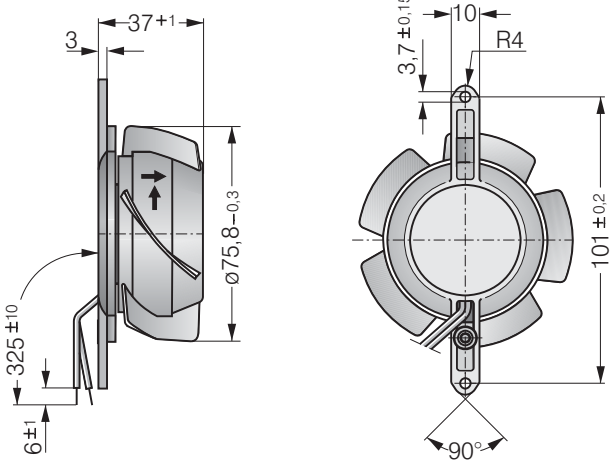

HP IP54 SP

ebmpapst

max. 47 m^3/h

AC axial fans

Series 8000 TV 76 Ø x 37 mm

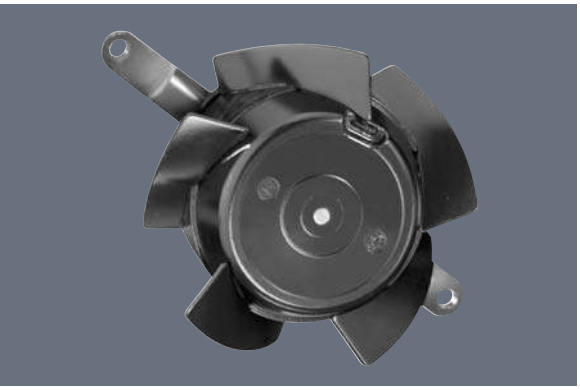

- AC fans with external rotor shaded-pole motor. Impedance protected against overloading.
- Impeller and mounting bracket of metal.
- Air exhaust over mounting bracket. Direction of rotation clockwise, seen on rotor.
- Electrical connection via 2 leads. Bared and tin-plated.
- Mass: 370 g.
- Please note our new ACmaxx series. With identical mounting dimensions and voltages, this series achieves higher energy efficiency.

Nominal data	Air flow	Air flow	Nominal voltage	Frequency	Sound pressure level	Sintec sleeve bearings / Ball bearings	Power input	Nominal speed	Temperature range	Service life L_{10} at 40 °C at T_{max}	Curve
Type	**m^3/h**	**CFM**	**V**	**Hz**	**dB(A)**	**□/■**	**Watts**	**RPM**	**°C**	**Hours Hours**	
8880 TV	24	14,1	**230**	**50**	15	□	9,0	1 650	-10...+80	60 000 / 25 000	–
8850 TV	31	18,2	**230**	**50**	20	□	12,0	2 100	-10...+70	52 500 / 25 000	–
8550 TV	40	23,5	**230**	**50**	27	□	12,0	2 650	-10...+70	52 500 / 25 000	–
8556 TV	40	23,5	**230**	**50**	28	■	12,0	2 750	-40...+90	52 500 / 15 000	–
8830 TV	27	15,9	**115**	**60**	18	□	8,0	1 850	-10...+80	62 500 / 25 000	–
8800 TV	36	21,2	**115**	**60**	24	□	11,0	2 450	-10...+70	55 000 / 27 500	–
8500 TV	47	27,7	**115**	**60**	32	□	11,0	3 150	-10...+75	55 000 / 25 000	–
8506 TV	47	27,7	**115**	**60**	33	■	11,0	3 250	-40...+95	55 000 / 15 000	–

The air flow and noise level of fans without external housing depends on the installation conditions. The stated air flow and noise has been measured with an orifice 76.5 mm Ø at a distance of approx. 17 mm from the mounting bracket. Under exceptionally favourable mounting conditions, the air flow of fan series 8000 N is achievable. The noise in the optimal operating range can only be measured for these fans in a specific application.

Fan type				Lead wires	
8880 TV	8850 TV	8830 TV	8800 TV	325 mm long	AWG 18, TR 64
8550 TV	8500 TV			325 mm long	AWG 18, TR 64
8556 TV	8506 TV			325 mm long	AWG 18

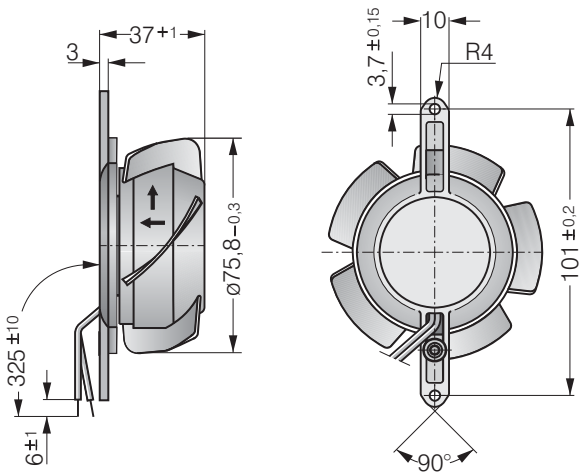

max. 70 m^3/h

AC axial fans

Series 3900 92 x 92 x 25 mm



- AC fans with internal rotor shaded-pole motor. Impedance protected against overloading.
- Metal fan housing, impeller of mineral-reinforced plastic PA.
- Air exhaust over struts. Direction of rotation counter-clockwise, seen on rotor.
- Electrical connection via 2 flat plugs 2.8 x 0.5 mm.
- Fan housing with grounding lug for screw M4.
- Mass: 280 g.
- Please note our new ACmaxx series. With identical mounting dimensions and voltages, this series achieves higher energy efficiency.

Nominal data	Air flow	Air flow	Nominal voltage	Frequency	Sound pressure level	Sound power level	Sintec sleeve bearings / Ball bearings	Power input	Nominal speed	Temperature range	Service life L_{10} at 40 °C	at T_{max}	Curve
Type	**m^3/h**	**CFM**	**V**	**Hz**	**dB(A)**	**Bel(A)**	**□/■**	**Watts**	**RPM**	**°C**	**Hours**	**Hours**	
3950 L	31	18,2	**230**	**50**	24	3,8	□	6,0	1 550	-10...+80	70 000 / 27 500		1
3956 L	31	18,2	**230**	**50**	24	3,8	■	6,0	1 550	-40...+80	70 000 / 27 500		1
3950 M	45	26,5	**230**	**50**	29	4,2	□	6,0	2 150	-10...+80	70 000 / 27 500		2
3956 M	45	26,5	**230**	**50**	29	4,2	■	6,0	2 150	-40...+80	70 000 / 27 500		2
3950	59	34,7	**230**	**50**	35	4,7	□	11,0	2 650	-20...+80	55 000 / 20 000		3
3956	59	34,7	**230**	**50**	35	4,7	■	11,0	2 650	-40...+80	55 000 / 20 000		3
3900 L	39	23,0	**115**	**60**	27	4,0	□	5,0	1 850	-10...+80	70 000 / 27 500		4
3906 L	39	23,0	**115**	**60**	27	4,0	■	5,0	1 850	-40...+80	70 000 / 27 500		4
3900 M	53	31,2	**115**	**60**	34	4,6	□	5,0	2 600	-10...+80	70 000 / 27 500		5
3906 M	53	31,2	**115**	**60**	34	4,6	■	5,0	2 600	-40...+80	70 000 / 27 500		5
3900	70	41,2	**115**	**60**	40	5,1	□	9,0	3 150	-20...+80	60 000 / 22 500		6
3906	70	41,2	**115**	**60**	40	5,1	■	9,0	3 150	-40...+80	60 000 / 22 500		6

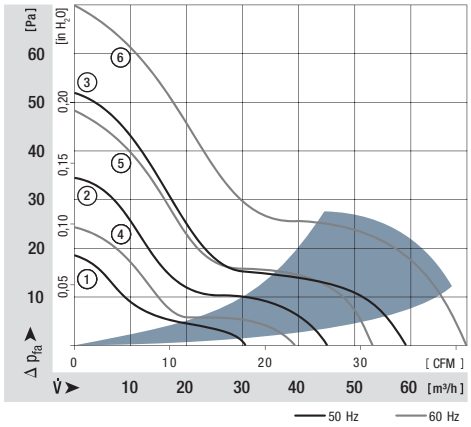

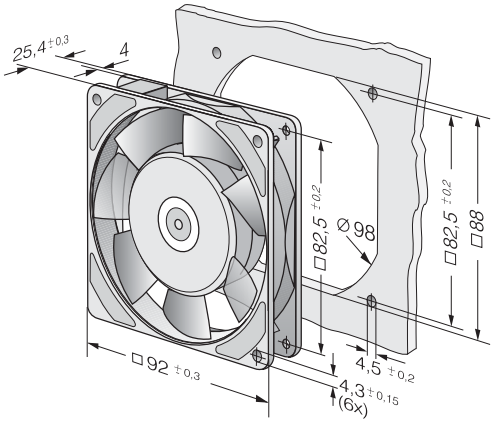

ebmpapst

max. 89 m^3/h

AC axial fans

Series 3000 92 x 92 x 38 mm

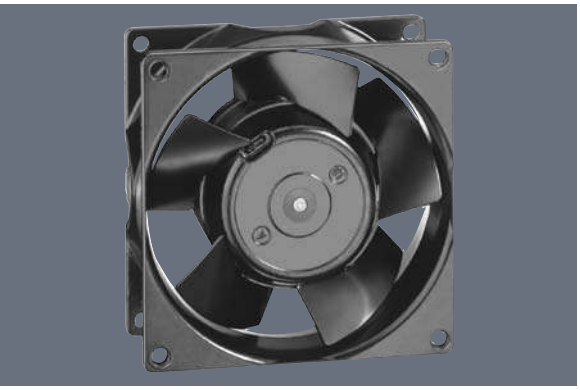

- AC fans with external rotor shaded-pole motor. Impedance protected against overloading.
- Metal fan housing and impeller.
- Air exhaust over struts. Rotational direction CW looking at rotor.
- Electrical connection via 2 leads. Bared and tin-plated.
- Fan housing with grounding lug and screw M4 x 8 (TORX).
- Mass: 420 g.
- Please note our new ACmaxx series. With identical mounting dimensions and voltages, this series achieves higher energy efficiency.

Nominal data	Air flow	Air flow	Nominal voltage	Frequency	Sound pressure level	Sound power level	Sintec sleeve bearings / Ball bearings	Power input	Nominal speed	Temperature range	Service life L_{10} at 40 °C at T_{max}	Curve
Type	**m^3/h**	**CFM**	**V**	**Hz**	**dB(A)**	**Bel(A)**	**□ / ■**	**Watts**	**RPM**	**°C**	**Hours Hours**	
3850	49	28,8	**230**	**50**	24	3,7	□	9,0	1 750	-10...+75	60 000 / 27 500	1
3856	54	31,8	**230**	**50**	26	3,9	■	9,0	1 950	-40...+90	60 000 / 20 000	2
3550	67	39,4	**230**	**50**	32	4,4	□	8,5	2 300	-10...+80	60 000 / 25 000	3
3556	67	39,4	**230**	**50**	33	4,5	■	8,5	2 400	-40...+90	60 000 / 20 000	3
3650	75	44,1	**230**	**50**	36	4,8	□	12,0	2 650	-10...+55	52 500 / 37 500	4
3656	75	44,1	**230**	**50**	37	4,9	■	12,0	2 700	-40...+75	52 500 / 22 500	4
3800	54	31,8	**115**	**60**	26	3,9	□	8,0	1 900	-10...+80	62 500 / 25 000	5
3806	60	35,3	**115**	**60**	29	4,2	■	8,0	2 150	-40...+95	62 500 / 17 500	6
3500	73	43,0	**115**	**60**	35	4,6	□	8,0	2 500	-10...+80	62 500 / 25 000	7
3506	73	43,0	**115**	**60**	36	4,7	■	8,0	2 600	-40...+95	62 500 / 17 500	7
3600	89	52,4	**115**	**60**	41	5,1	□	11,0	3 100	-10...+65	55 000 / 30 000	8
3606	89	52,4	**115**	**60**	42	5,2	■	11,0	3 200	-40...+75	55 000 / 25 000	8

Fan type	Lead wires	
With sleeve bearings	310 mm long	AWG 18, TR 64
With ball bearings	310 mm long	AWG 18

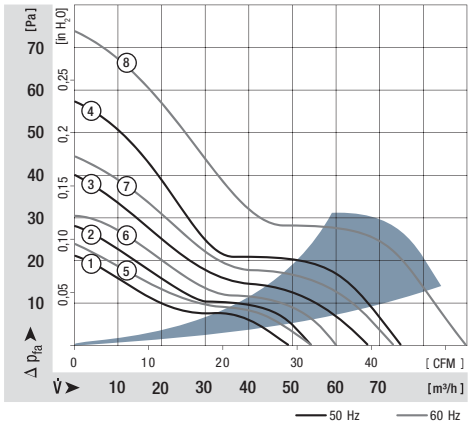

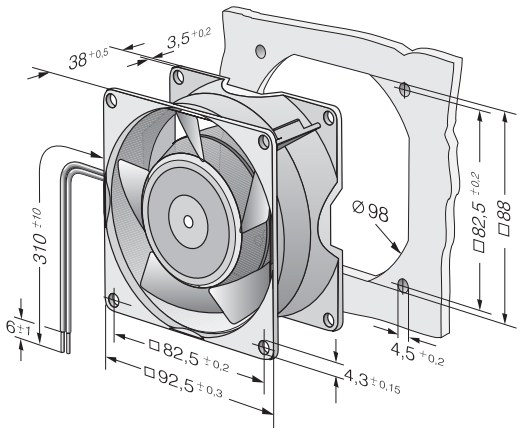

max. 135 m^3/h

AC axial fans

Series 9900 119 x 119 x 25 mm



- AC fans with external rotor shaded-pole motor.
  Protected against overloading by thermal cut-out.
- Metal fan housing and impeller.
- Air exhaust over struts. Direction of rotation counter-clockwise, seen on rotor.
- Electrical connection via 2 flat plugs 2.8 x 0.5 mm.
- Fan housing with grounding lug and screw M4 x 8 (TORX).
- Mass: 320 g.
- Please note our new ACmaxx series. With identical mounting dimensions and voltages, this series achieves higher energy efficiency.

Nominal data	Air flow	Air flow	Nominal voltage	Frequency	Sound pressure level	Sound power level	Sintec sleeve bearings / Ball bearings	Power input	Nominal speed	Temperature range	Service life L_{10} at 40 °C	at T_{max}	Curve
Type	**m^3/h**	**CFM**	**V**	**Hz**	**dB(A)**	**Bel(A)**	**□/■**	**Watts**	**RPM**	**°C**	**Hours**	**Hours**	
9956 L	84	49,4	**230**	**50**	29	4,4	■	9,5	1850	-40...+80	57 500 / 22 500		1
9956 M	104	61,2	**230**	**50**	35	4,7	■	10,0	2250	-40...+80	57 500 / 22 500		2
9950	117	68,9	**230**	**50**	37	5,0	□	14,0	2450	-20...+70	47 500 / 22 500		3
9956	117	68,9	**230**	**50**	37	5,0	■	14,0	2450	-40...+70	47 500 / 22 500		3
9906 L	100	58,9	**115**	**60**	34	4,6	■	8,0	2100	-40...+80	62 500 / 25 000		4
9906 M	111	65,3	**115**	**60**	37	5,0	■	8,0	2450	-40...+80	62 500 / 25 000		5
9900	135	79,5	**115**	**60**	42	5,4	□	12,0	2850	-20...+70	52 500 / 25 000		6
9906	135	79,5	**115**	**60**	42	5,4	■	12,0	2850	-40...+70	52 500 / 25 000		6

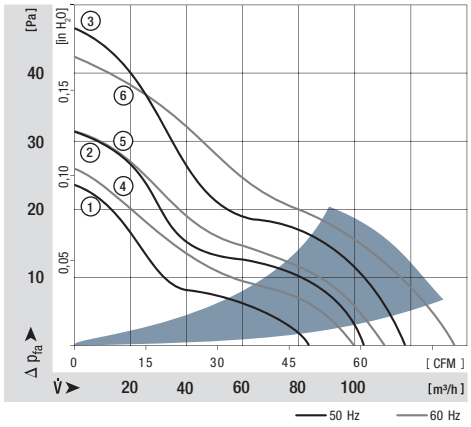

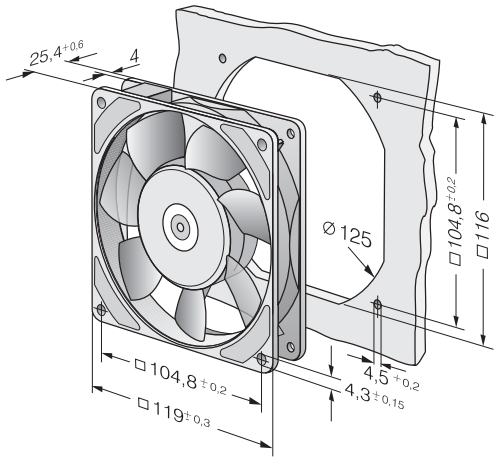

ebmpapst

max. 180 m^3/h

AC axial fans

Series 4000 N 119 x 119 x 38 mm

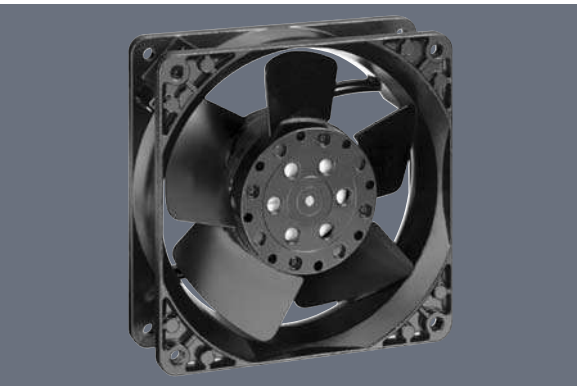

- AC fans with external rotor shaded-pole motor. Impedance protected against overloading.
- Metal fan housing and impeller
- Air intake over struts. Direction of rotation clockwise, seen on rotor.
  Types 4890 N and 4840 N air exhaust over struts.
- Electrical connection via 2 flat plugs 3.0 x 0.5 mm.
- Impeller with 3 or 5 blades, see note for fan type.
- Optionally available: Models with reinforced flanges and single leads.
- Fan housing with grounding lug for screw M 4 and UNC.
- Mass: 550 g.
- Please note our new ACmaxx series. With identical mounting dimensions and voltages, this series achieves higher energy efficiency.

Nominal data	Air flow	Air flow	Nominal voltage	Frequency	Sound pressure level	Sound power level	Sintec sleeve bearings / Ball bearings	Power input	Nominal speed	Temperature range	Service life L_{10} at 40 °C at T_{max}	Curve
Type	m^3/h	CFM	V	Hz	dB(A)	Bel(A)	□ / ■	Watts	RPM	°C	Hours Hours	
4890 N	80	47,1	**230**	**50**	25	4,0	□	11,0	1 550	-10...+70	55 000 / 27 500	1
4850 N*	100	58,9	**230**	**50**	32	4,4	□	10,0	1 800	-10...+70	57 500 / 27 500	2
4580 N*	123	72,4	**230**	**50**	41	5,2	□	18,0	2 350	-10...+55	40 000 / 27 500	3
4550 N*	145	85,3	**230**	**50**	44	5,4	□	16,5	2 550	-10...+55	42 500 / 30 000	4
4650 N	160	94,2	**230**	**50**	46	5,4	□	19,0	2 650	-10...+55	37 500 / 27 500	5
4656 N	160	94,2	**230**	**50**	47	5,5	■	19,0	2 650	-40...+85	37 500 / 15 000	5
4840 N	85	50,0	**115**	**60**	26	4,1	□	10,0	1 650	-10...+75	57 500 / 25 000	6
4800 N*	97	57,1	**115**	**60**	32	4,3	□	9,0	1 750	-10...+75	60 000 / 27 500	7
4530 N*	151	88,9	**115**	**60**	45	5,4	□	16,0	2 700	-10...+65	42 500 / 25 000	8
4500 N*	169	99,5	**115**	**60**	48	5,7	□	15,0	3 000	-10...+65	47 500 / 25 000	9
4600 N	180	105,9	**115**	**60**	50	5,7	□	18,0	3 100	-10...+60	40 000 / 25 000	10
4606 N	180	105,9	**115**	**60**	51	5,8	■	18,0	3 100	-40...+90	40 000 / 15 000	10

230 V and 115 V versions are rated for both 50 Hz and 60 Hz operation.
For 60 Hz data, please refer to the corresponding 115 V 60 Hz model,
for 50 Hz data please refer to the corresponding 230 V 50 Hz model.

* Fan with 3 blades.

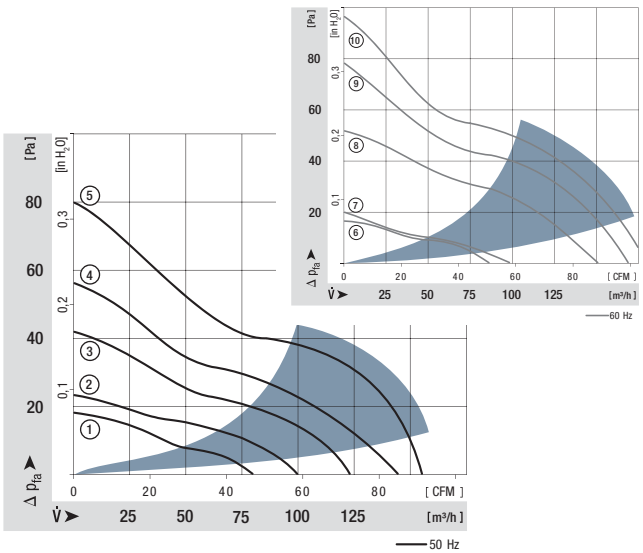

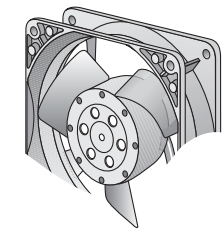

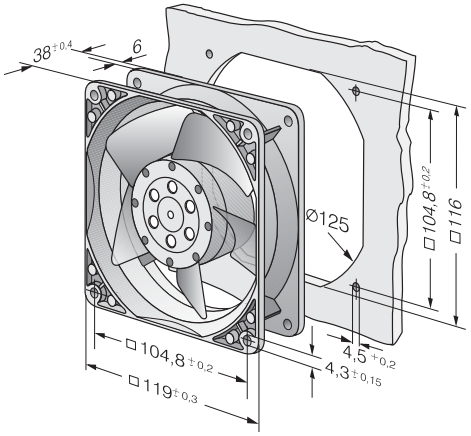

max. 180 m^3/h

AC axial fans

Series 4000 Z 119 x 119 x 38 mm

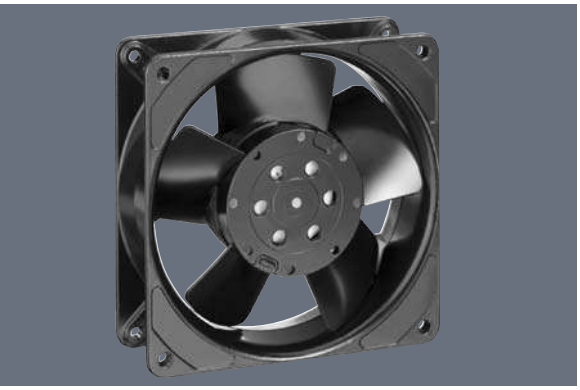

- AC fans with external rotor shaded-pole motor. Impedance protected against overloading.
- Metal fan housing and impeller.
- Air exhaust over struts. Direction of rotation clockwise, seen on rotor.
- Electrical connection via 2 flat plugs 2.8 x 0.5 mm.
- Optionally available: Models with reinforced flanges and single leads.
- Fan housing with grounding lug and screw M4 x 8 (TORX).
- Mass: 540 g.
- Please note our new ACmaxx series. With identical mounting dimensions and voltages, this series achieves higher energy efficiency.

Nominal data	Air flow	Air flow	Nominal voltage	Frequency	Sound pressure level	Sound power level	Sintec sleeve bearings / Ball bearings	Power input	Nominal speed	Temperature range	Service life L_{10} at 40 °C at T_{max}	Curve
Type	**m^3/h**	**CFM**	**V**	**Hz**	**dB(A)**	**Bel(A)**	**□/■**	**Watts**	**RPM**	**°C**	**Hours Hours**	
4850 Z	100	58,9	**230**	**50**	26	4,0	□	13,0	1 700	-10...+65	50 000 / 27 500	1
4856 Z	100	58,9	**230**	**50**	26	4,0	■	13,0	1 700	-40...+75	50 000 / 20 000	1
4580 Z	115	67,7	**230**	**50**	30	4,3	□	13,0	1 900	-10...+65	50 000 / 27 500	2
4586 Z	115	67,7	**230**	**50**	30	4,3	■	13,0	1 900	-40...+75	50 000 / 20 000	2
4650 Z	160	94,2	**230**	**50**	40	5,3	□	19,0	2 650	-10...+50	37 500 / 30 000	3
4656 Z	160	94,2	**230**	**50**	40	5,3	■	19,0	2 650	-40...+75	37 500 / 17 500	3
4800 Z	105	61,6	**115**	**60**	28	4,1	□	12,0	1 800	-10...+70	52 500 / 25 000	4
4806 Z	105	61,6	**115**	**60**	28	4,1	■	12,0	1 800	-40...+75	52 500 / 17 500	4
4530 Z	120	70,6	**115**	**60**	32	4,4	□	12,0	2 000	-10...+70	52 500 / 25 000	5
4536 Z	120	70,6	**115**	**60**	32	4,4	■	12,0	2 000	-40...+75	52 500 / 17 500	5
4600 Z	180	105,9	**115**	**60**	45	5,6	□	18,0	3 100	-10...+60	40 000 / 25 000	6
4606 Z	180	105,9	**115**	**60**	45	5,6	■	18,0	3 100	-40...+85	40 000 / 15 000	6

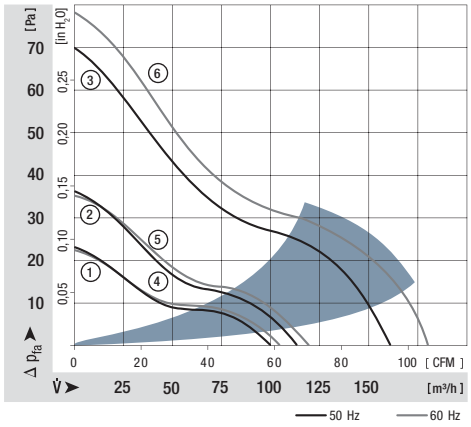

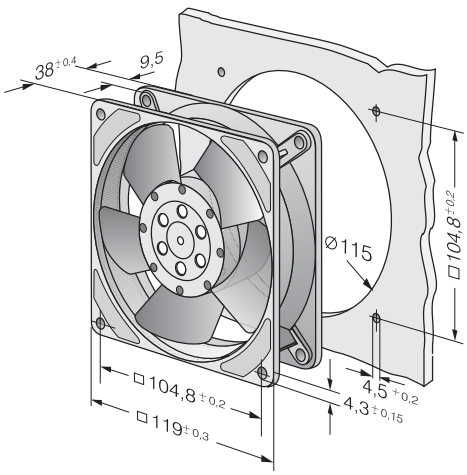

HP IP54 SP

ebmpapst

max. 147 m^3/h

AC axial fans

Series 4600 TA 113 Ø x 37 mm

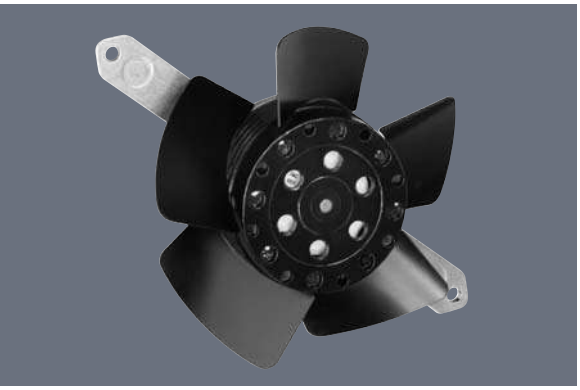

- AC fans with external rotor shaded-pole motor. Impedance protected against overloading.
- Impeller and mounting bracket of metal.
- Air intake over mounting bracket. Direction of rotation clockwise, seen on rotor.
- Electrical connection via 2 leads. Bared and tin-plated.
- Mass: 430 g.
- Please note our new ACmaxx series. With identical mounting dimensions and voltages, this series achieves higher energy efficiency.

Nominal data	Air flow	Air flow	Nominal voltage	Frequency	Sound pressure level	Sintec sleeve bearings / Ball bearings	Power input	Nominal speed	Temperature range	Service life L_{10} at 40 °C	at T_{max}	Curve
Type	**m^3/h**	**CFM**	**V**	**Hz**	**dB(A)**	**□/■**	**Watts**	**RPM**	**°C**	**Hours**	**Hours**	
4650 TA	138	81,2	**230**	**50**	41	□	19,0	2 550	-10...+45	37 500	/ 32 500	–
4656 TA	138	81,2	**230**	**50**	42	■	19,0	2 550	-40...+75	37 500	/ 17 500	–
4600 TA	147	86,5	**115**	**60**	43	□	18,0	2 900	-10...+50	40 000	/ 32 500	–
4606 TA	147	86,5	**115**	**60**	44	■	18,0	2 900	-40...+80	40 000	/ 17 500	–

The air flow and noise level of fans without external housing depends on the installation conditions. The stated air flow and noise has been measured with an orifice 109 mm Ø at a distance of approx. 17 mm from the mounting bracket. Under exceptionally favourable mounting conditions, the air flow of fan series 4600 N is achievable. The noise in the optimal operating range can only be measured for these fans in a specific application.

Fan type		Lead wires
4650 TA	4600 TA	AWG 22, TR 32

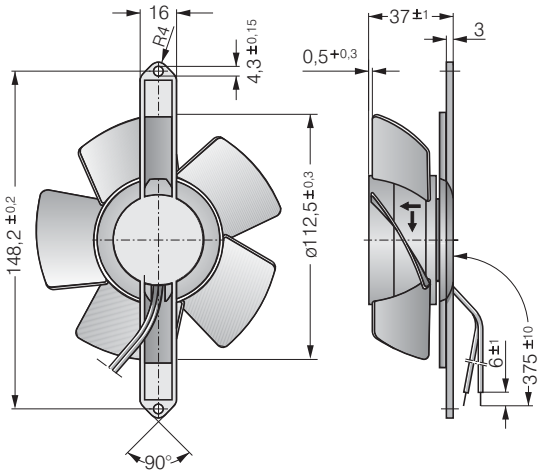

max. 140 m^3/h

AC axial fans

Series 4600 TZ 108 Ø x 37 mm

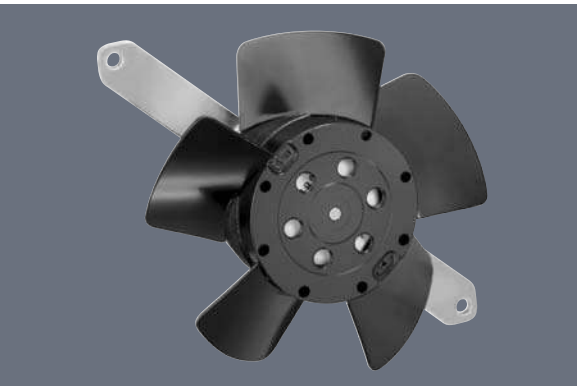

- AC fans with external rotor shaded-pole motor. Impedance protected against overloading.
- Impeller and mounting bracket of metal.
- Air exhaust over mounting bracket. Direction of rotation clockwise, seen on rotor.
- Electrical connection via 2 leads. Bared and tin-plated.
- Mass: 430 g.
- Please note our new ACmaxx series. With identical mounting dimensions and voltages, this series achieves higher energy efficiency.

Nominal data	Air flow	Air flow	Nominal voltage	Frequency	Sound pressure level	Sintec sleeve bearings / Ball bearings	Power input	Nominal speed	Temperature range	Service life L_{10} at 40 °C	at T_{max}	Curve
Type	**m^3/h**	**CFM**	**V**	**Hz**	**dB(A)**	**□/■**	**Watts**	**RPM**	**°C**	**Hours**	**Hours**	
4650 TZ	125	73,6	**230**	**50**	42	□	19,0	2 600	-10...+50	37 500	/ 37 500	–
4656 TZ	125	73,6	**230**	**50**	42	■	19,0	2 600	-40...+65	37 500	/ 20 000	–
4600 TZ	140	82,4	**115**	**60**	45	□	18,0	2 950	-10...+50	40 000	/ 32 500	–
4606 TZ	140	82,4	**115**	**60**	45	■	18,0	2 950	-40...+75	40 000	/ 17 500	–

The air flow and noise level of fans without external housing depends on the installation conditions. The stated air flow and noise has been measured with an orifice 109 mm Ø at a distance of approx. 17 mm from the mounting bracket. Under exceptionally favourable mounting conditions, the air flow of fan series 4000 Z is achievable. The noise in the optimal operating range can only be measured for these fans in a specific application.

Fan type		Lead wires
4650 TZ	4600 TZ	AWG 22, TR 32
4656 TZ	4606 TZ	AWG 18

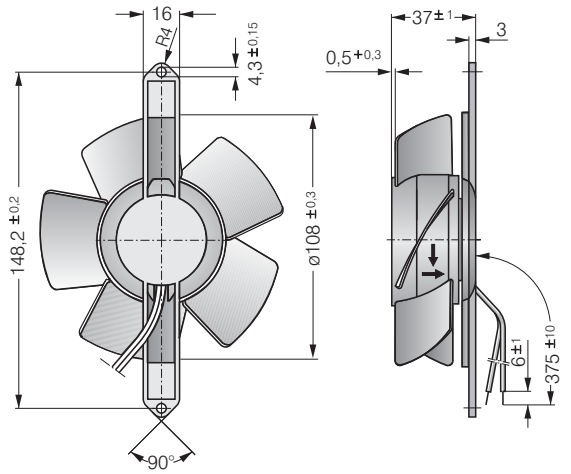

HP IP54 SP

ebmpapst

max. 206 m^3/h

AC axial fans

Series 5900 127 x 127 x 38 mm

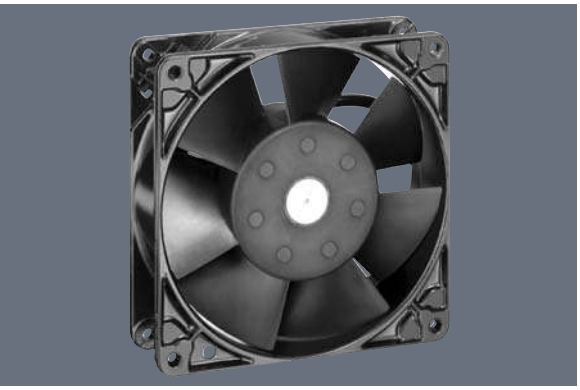

- AC fans with internal rotor shaded-pole motor. Impedance protected against overloading.
- Metal fan housing and impeller of fibreglass-reinforced plastic PA.
- Air exhaust over struts. Direction of rotation counter-clockwise, seen on rotor.
- Electrical connection via 2 flat plugs 2.8 x 0.8 mm.
- Fan housing with grounding lug and screw M4 x 6.
- Mass: 570 g.
- Please note our new ACmaxx series. With identical mounting dimensions and voltages, this series achieves higher energy efficiency.

Nominal data	Air flow	Air flow	Nominal voltage	Frequency	Sound pressure level	Sound power level	Sintec sleeve bearings / Ball bearings	Power input	Nominal speed	Temperature range	Service life L_{10} at 40 °C at T_{max}	Curve
Type	**m^3/h**	**CFM**	**V**	**Hz**	**dB(A)**	**Bel(A)**	**□/■**	**Watts**	**RPM**	**°C**	**Hours Hours**	
5988	150	88,3	**230**	**50**	37	4,9	■	13,0	2 250	-30...+55	35 000 / 20 000	1
5950	180	105,9	**230**	**50**	43	5,4	□	18,0	2 700	-20...+50	40 000 / 32 500	3
5958	180	105,9	**230**	**50**	44	5,5	■	18,0	2 750	-30...+60	40 000 / 25 000	3
5938	162	95,3	**115**	**60**	40	4,9	■	12,0	2 500	-30...+55	35 000 / 20 000	2
5900	206	121,2	**115**	**60**	46	5,7	□	17,0	3 050	-20...+55	42 500 / 30 000	4
5908	206	121,2	**115**	**60**	47	5,8	■	17,0	3 100	-30...+75	42 500 / 20 000	4

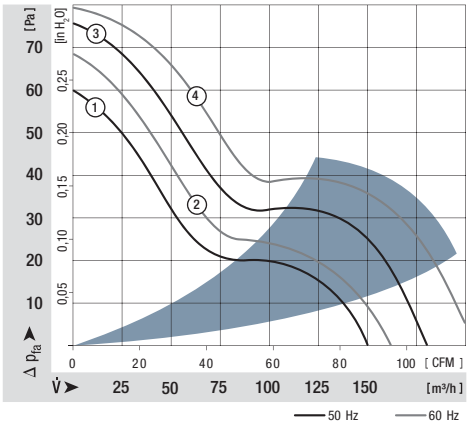

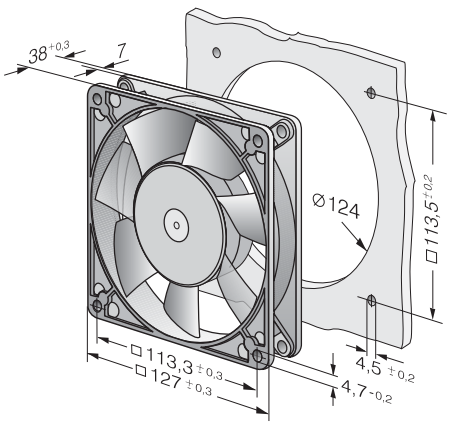

max. 270 m^3/h

AC axial fans

Series 5600 135 x 135 x 38 mm



- AC fans with external rotor shaded-pole motor.
  Protected against overloading by thermal cut-out.
- Metal fan housing and impeller.
- Air exhaust over struts. Direction of rotation counter-clockwise, seen on rotor.
- Electrical connection via 2 flat plugs 2.8 x 0.5 mm.
- Fan housing with grounding lug and screw M4 x 8 (TORX).
- Mass: 800 g.
- Please note our new ACmaxx series. With identical mounting dimensions and voltages, this series achieves higher energy efficiency.

Nominal data	Air flow	Air flow	Nominal voltage	Frequency	Sound pressure level	Sound power level	Sintec sleeve bearings / Ball bearings	Power input	Nominal speed	Temperature range	Service life L_{10} at 40 °C	at T_{max}	Curve
Type	**m^3/h**	**CFM**	**V**	**Hz**	**dB(A)**	**Bel(A)**	**□/■**	**Watts**	**RPM**	**°C**	**Hours**	**Hours**	
5656 S	235	138,3	**230**	**50**	46	5,9	■	30,0	2 700	-35...+70	45 000	/ 20 000	1
5606 S	270	158,9	**115**	**60**	50	6,2	■	26,0	3 100	-35...+80	47 500	/ 20 000	2

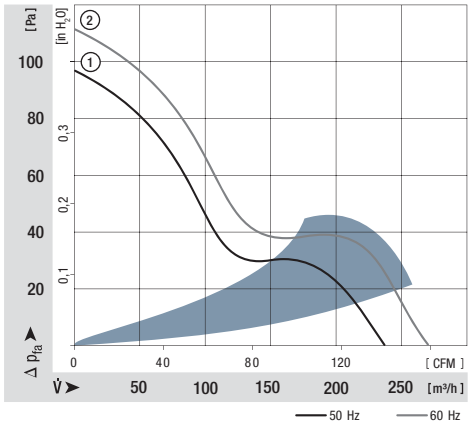

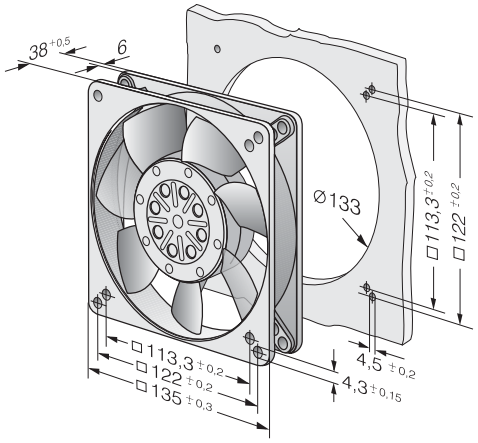

Hp IP54 Sp

ebmpapst

max. 380 m^3/h

AC axial fans

Series 7000 150 x 172 x 38 mm

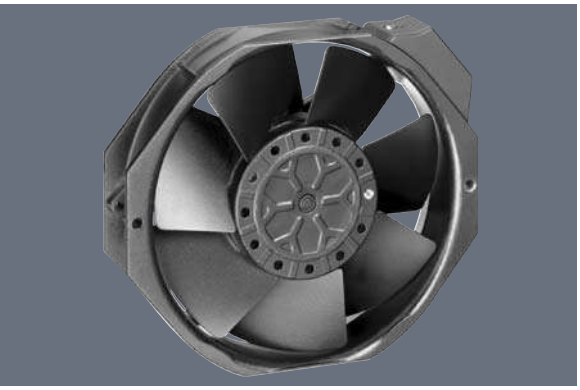

- AC fans with external rotor capacitor motor. Protected against overloading by integrated thermal cut-out.
- Metal fan housing and impeller.
- Air exhaust over struts. Direction of rotation counter-clockwise, seen on rotor.
- Electrical connection via 2 flat plugs 2.8 x 0.5 mm.
- Fan housing with grounding lug and screw M4 x 6.
- Mass: 900 g.
- Please note our new ACmaxx series. With identical mounting dimensions and voltages, this series achieves higher energy efficiency.

Nominal data	Air flow	Air flow	**Nominal voltage**	**Frequency**	Sound pressure level	Sound power level	Sintec sleeve bearings Ball bearings	Power input	Nominal speed	Temperature range	Service life L_{10} at 40 °C	at T_{max}	Curve
Type	**m^3/h**	**CFM**	**V**	**Hz**	**dB(A)**	**Bel(A)**	**□/■**	**Watts**	**RPM**	**°C**	**Hours**	**Hours**	
7056 ES	320	188,3	**230**	**50**	51	6,4	■	27,0	2 800	-25...+55	60 000 / 32 000		1
7006 ES	380	223,6	**115**	**60**	56	6,8	■	28,0	3 350	-25...+65	55 000 / 18 000		2

Minimum ambient temperature -15 °C.

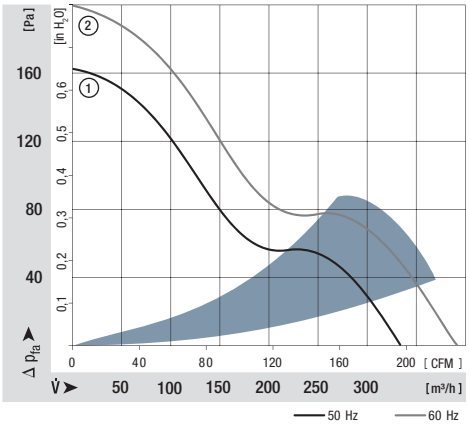

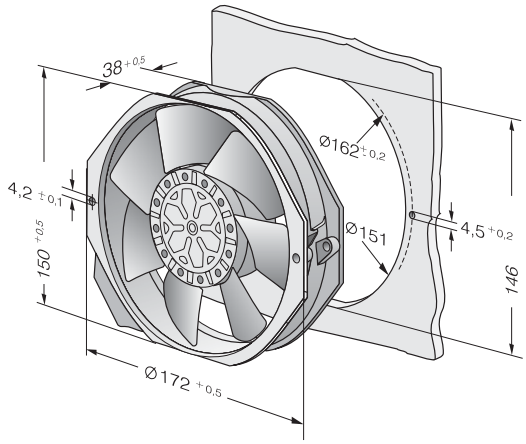

max. 380 m^3/h

AC axial fans

Series 7800 150 Ø x 55 mm



- AC fans with external rotor shaded-pole motor. Protected against overloading by integrated thermal cut-out.
- Metal fan housing and impeller.
- Air exhaust over struts. Direction of rotation counter-clockwise, seen on rotor.
- Electrical connection via 2 leads. Bared and tin-plated.
- Fan housing with grounding lug and screw M4 x 6.
- Mass: 1.1 kg.
- Please note our new ACmaxx series. With identical mounting dimensions and voltages, this series achieves higher energy efficiency.

Nominal data	Air flow	Air flow	Nominal voltage	Frequency	Sound pressure level	Sound power level	Sintec sleeve bearings / Ball bearings	Power input	Nominal speed	Temperature range	Service life L_{10} at 40 °C	at T_{max}	Curve
Type	**m^3/h**	**CFM**	**V**	**Hz**	**dB(A)**	**Bel(A)**	**□/■**	**Watts**	**RPM**	**°C**	**Hours**	**Hours**	
7855 ES	325	191,3	**230**	**50**	49	6,0	■	45,0	2 800	-25...+50	60 000 / 47 000		1
7856 ES	325	191,3	**230**	**50**	49	6,0	■	45,0	2 800	-25...+70	60 000 / 23 000		1
7805 ES	380	223,7	**115**	**60**	53	6,4	■	38,0	3 250	-25...+70	60 000 / 47 000		2
7806 ES	380	223,7	**115**	**60**	53	6,4	■	38,0	3 250	-25...+90	60 000 / 18 000		2

Minimum ambient temperature -15 °C, admissible for a short time at -30 °C; without condensation.

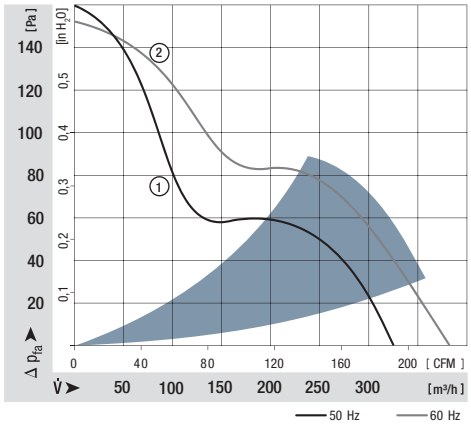

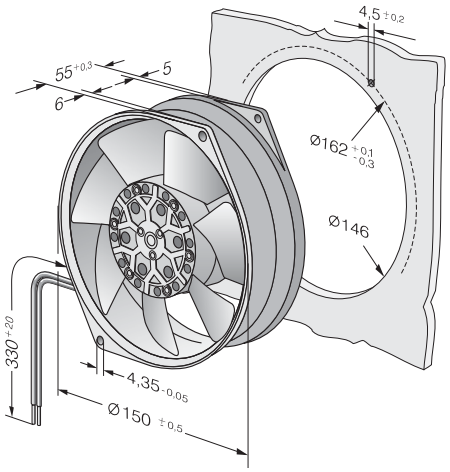

ebmpapst

max. 425 m^3/h

AC axial fans

Series 7400 150 Ø x 55 mm

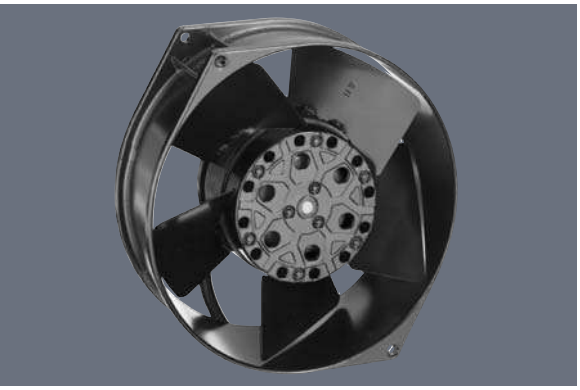

- AC fans with external rotor shaded-pole motor. Protected against overloading by integrated thermal cut-out.
- Metal fan housing and impeller.
- Air exhaust over struts. Direction of rotation counter-clockwise, seen on rotor.
- Electrical connection via 2 leads. Strand ends with brass lead tips.
- Fan housing with grounding lug and screw M4 x 6.
- Mass: 1.1 kg.
- Please note our new ACmaxx series. With identical mounting dimensions and voltages, this series achieves higher energy efficiency.

Nominal data	Air flow	Air flow	Nominal voltage	Frequency	Sound pressure level	Sound power level	Sintec sleeve bearings / Ball bearings	Power input	Nominal speed	Temperature range	Service life L_{10} at 40 °C	at T_{max}	Curve
Type	**m^3/h**	**CFM**	**V**	**Hz**	**dB(A)**	**Bel(A)**	**□/■**	**Watts**	**RPM**	**°C**	**Hours**	**Hours**	
7450 ES	380	223,6	**230**	**50**	60	6,8	■	47,0	2 700	-25...+50	63 000 / 50 000		1
7400 ES	425	250,1	**115**	**60**	62	6,9	■	46,0	3 050	-25...+70	50 000 / 24 000		2

Minimum ambient temperature -15 °C, admissible for a short time at -30 °C; without condensation.

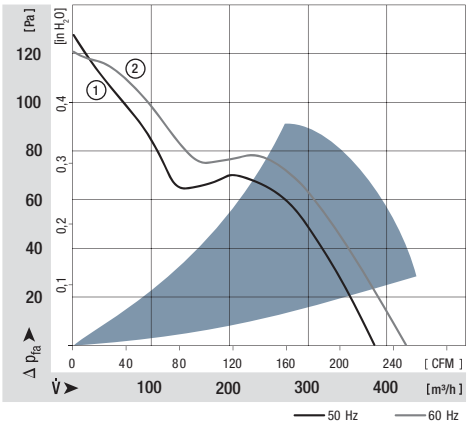

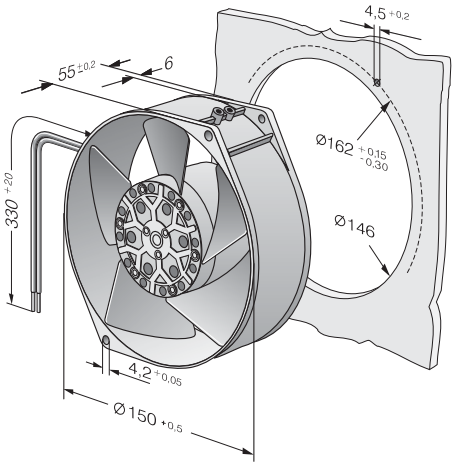

max. 500 m^3/h

AC axial fans

Series 6000 172 Ø x 51 mm



- AC fans with external rotor capacitor motor. Protected against overloading by integrated thermal cut-out.
- Metal fan housing and impeller.
- Air exhaust over struts. Direction of rotation counter-clockwise, seen on rotor.
- Electrical connection via 2 flat plugs 2.8 x 0.5 mm.
- Fan housing with grounding lug and screw M4 x 6.
- Mass: 1.0 kg.
- Please note our new ACmaxx series. With identical mounting dimensions and voltages, this series achieves higher energy efficiency.

Nominal data	Air flow	Air flow	Nominal voltage	Frequency	Sound pressure level	Sound power level	Sintec sleeve bearings / Ball bearings	Power input	Nominal speed	Temperature range	Service life L_{10} at 40 °C	at T_{max}	Curve
Type	**m^3/h**	**CFM**	**V**	**Hz**	**dB(A)**	**Bel(A)**	**□/■**	**Watts**	**RPM**	**°C**	**Hours**	**Hours**	
6058 ES	375	220,7	**230**	**50**	55	5,9	■	24,0	2 800	-25...+70	62 000 / 31 000		1
6078 ES	420	247,2	**230**	**50**	54	6,3	■	26,0	2 800	-25...+60	62 000 / 39 000		2
6008 ES	440	259,0	**115**	**60**	60	6,4	■	26,0	3 300	-25...+70	57 000 / 28 000		3
6028 ES	500	284,3	**115**	**60**	58	6,7	■	29,0	3 300	-25...+75	57 000 / 22 000		4

Minimum ambient temperature -15 °C, admissible for a short time at -30 °C; without condensation.

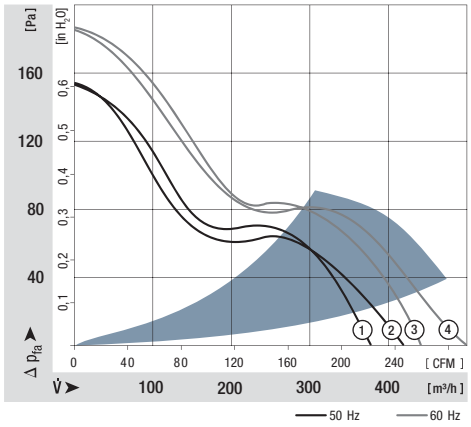

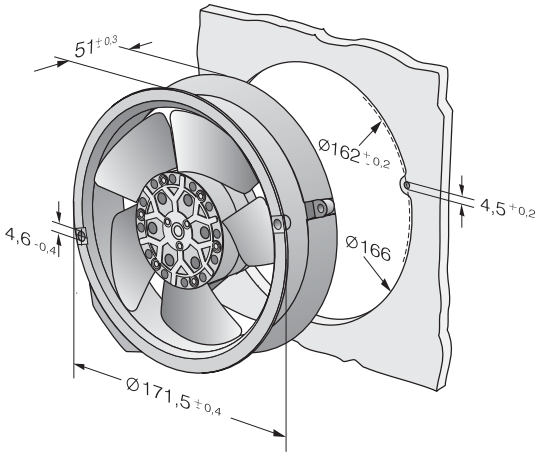

ebmpapst

max. 1030 m^3/h

AC axial fans

W** 200 225 x 225 x 80 mm

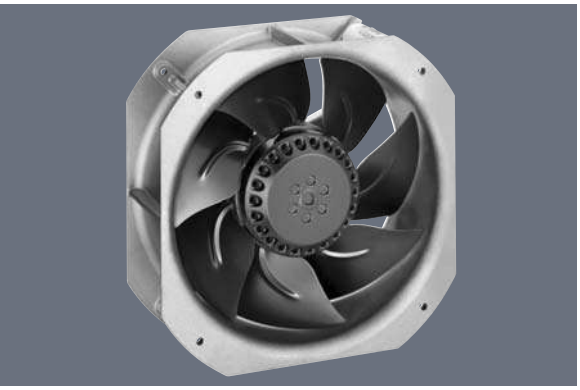

- External-rotor single-phase motor.* / External rotor shaded-pole motor.**
- Motor protection: TOP wired internally.
- Material: Wall ring die-cast aluminium, seven blades of sheet steel. Blades and rotor coated in black.
- Direction of air flow “V”, air exhaust over struts. Direction of rotation: counter-clockwise, seen on rotor.
- Electrical connection: Terminal strip (operating capacitor connected).
- Continuous operation (S1).
- Insulation class: “F”
- Mass: 2 kg.
- Please note our new ACmaxx series. With identical mounting dimensions and voltages, this series achieves higher energy efficiency.

Nominal data	Air flow	Air flow	Nominal voltage	Frequency	Sound pressure level	Sound power level	Sleeve bearings Ball bearings	Power input	Nominal speed	Temperature range	Service life L_{10} at 40 °C	at T_{max}	Curve
Type	**m^3/h**	**CFM**	**V**	**Hz**	**dB(A)**	**Bel(A)**	**□/■**	**Watts**	**RPM**	**°C**	**Hours**	**Hours**	
W2E200-HK86-01*	1030	606,2	**115**	**60**	61	6,7	■	80,0	2800	-25...+65	60 000 / 58 000		2
W2E200-HK38-01*	880	517,9	**230**	**50**	58	6,6	■	64,0	2550	-25...+60	63 000 / 60 000		2
W4S200-HK04-01**	450	264,9	**230**	**50**	40	4,7	■	30,0	1370	-25...+70	85 000 / 80 000		1

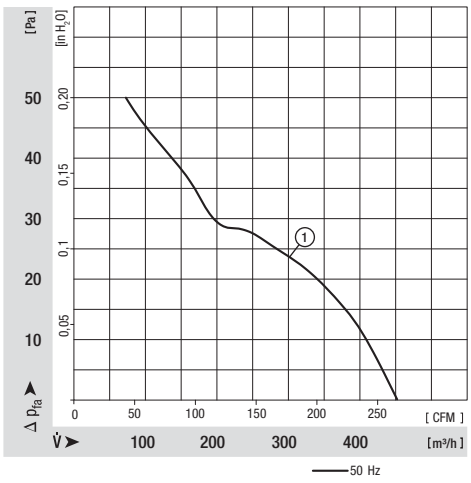

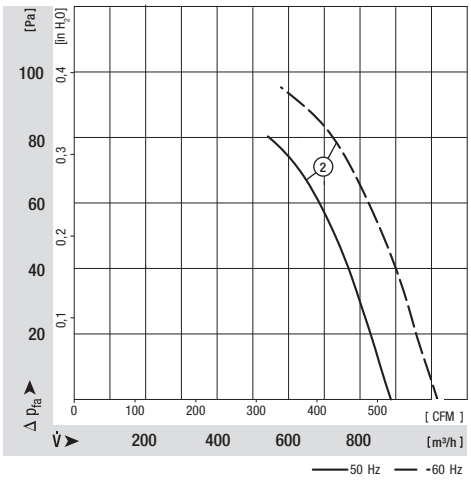

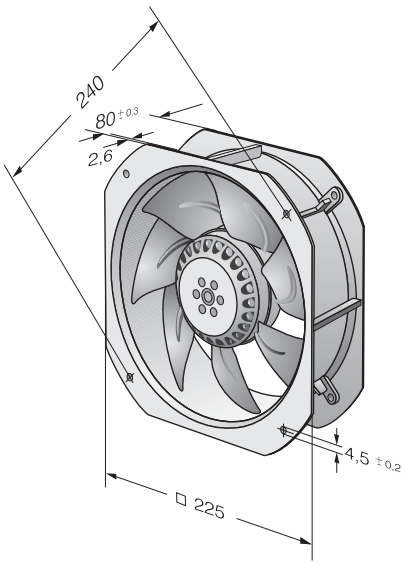

max. 1865 m^3/h

AC axial fans

W2E 250 280 x 280 x 80 mm

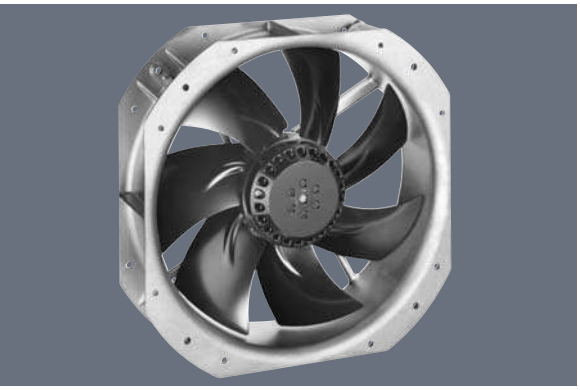

- External-rotor single-phase motor.
- Motor protection: TOP wired internally.
- Material: Wall ring die-cast aluminium, seven blades of sheet steel. Blades and rotor coated in black.
- Direction of air flow “V”, air exhaust over struts. Direction of rotation: counter-clockwise, seen on rotor.
- Electrical connection: Terminal strips (operating capacitor connected).
- Continuous operation (S1).
- Insulation class: “F”
- Mass: 2 kg.
- Please note our new ACmaxx series. With identical mounting dimensions and voltages, this series achieves higher energy efficiency.

Nominal data	Air flow	Air flow	Nominal voltage	Frequency	Sound pressure level	Sound power level	Sleeve bearings Ball bearings	Power input	Nominal speed	Temperature range	Service life L_{10} at 40 °C	at T_{max}	Curve
Type	**m^3/h**	**CFM**	**V**	**Hz**	**dB(A)**	**Bel(A)**	**□/■**	**Watts**	**RPM**	**°C**	**Hours**	**Hours**	
W2E 250-HL06-01	1865	1077,1	**230**	**50**	66	7,2	■	127,0	2 550	-25...+60	63 000 / 70 000		3

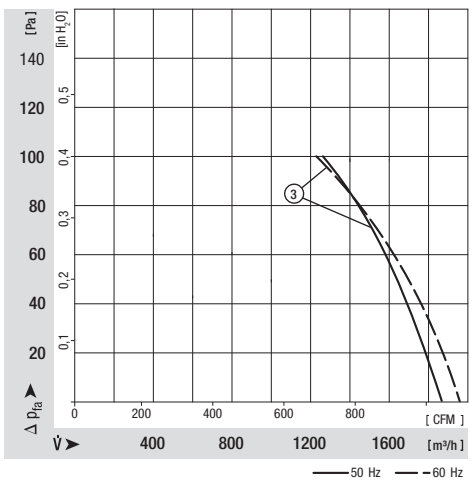

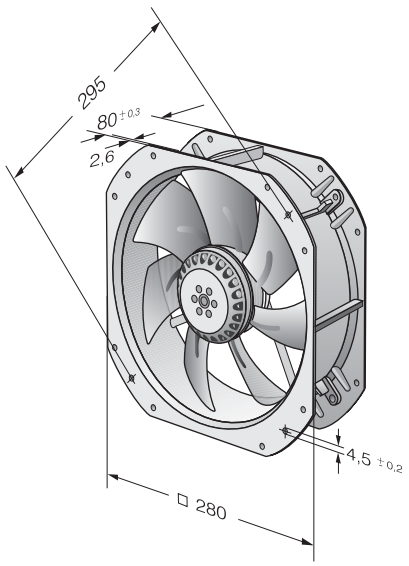

ebmpapst

AC centrifugal fans

	AC centrifugal fan overview	165
	AC centrifugal fans	166



AC fans

Technical information

Product line
The renowned ebm-papst AC fans are used when DC voltage is not available. The AC range of fans is based on experience gained from decades of development activity, millions of units in series production and competence in innovation of a world-wide technological leader.

A wide range of fans for AC operation is presented in this catalogue. In addition to complete device fans, you will also find fans without external housing, providing a particularly economical advantage when the air duct can be integrated in the respective device.

Variety of sizes
AC fans are available in a variety of sizes with either air exhaust or air intake over struts. Silent running models with sleeve bearings or for extreme ambient conditions; fans with ball bearings are available with plug connection or external leads.

Shaded-pole or capacitor motors
Fan drives by shaded-pole or capacitor motors, most of which incorporate the world-famous ebm-papst external rotor principle: The fan blades are directly attached to the external rotor of the external rotor motor, thus combining both high performance and profitability.

Flat built AC fans
ebm-papst also has particularly flat built AC fans with internal rotor motor. Their advantage: quick start to full speed. A plastic impeller and the both smaller and lighter internal rotor motor lead to a lower moment of inertia.

Bearings
AC fans with sleeve bearings are powered by Class E insulated motors. Fans with ball bearings are equipped with Class B, E or F insulated motors.

Protection class
All ebm-papst fans conform to the requirements of IP 20. Fans conforming to IP 54 and special types of protection class are also available.

AC voltage
The line of AC fans for Euro voltage according to IEC 60038 (230 V + 6 %, -10 %) is basically also available for 115 V.

Frequencies
AC fans can be operated at frequencies of 50 Hz or 60 Hz. However, their technical data then change accordingly.

Capacitor
Fans driven by capacitor external motors provide particularly high operating efficiency. Generally, the required operating capacitor is already integrated in the fan housing.

Overloading
Almost all AC fans are protected against overloading (e.g. due to locked rotor) the drive motors are either impedance protected (marked “Impedance protected”, and/or “Z.P.”) or are equipped with a thermal switch (marked “Thermally protected” or “Th.P.”). The model designation of these fans ends with “S”.

Centrifugal fans for AC operation

Overview of air prformance

Dimension	Series	Air flow	Page
mm		m^3/h	
□ 121 x 37	RL 90	40...42	166
□ 135 x 38	RG 90	47...54	167
□ 180 x 40	RG 125	86...94	168
□ 220 x 56	RG 160	202...223	169
Ø 138 x 40	RER 125	104...115	170
Ø 176 x 54	RER 160	234...274	171

Overview of technically feasible designs

Centrifugal fans								
Series	mm			OPTIONAL				P.
	Dimension	VDE, UL, CSA	Sinter sleeve bearings/ ball bearings	Speed sensor	Humidity protection	IP >= IP54	Salt spray fog protection	Page
RL 90	121 x 121 x 37	yes	□/■	–	•	•	•	166
RG 90	135 x 135 x 38	yes	□/■	–	•	•	•	167
RG 125	180 x 180 x 40	yes	■	–	•	•	•	168
RG 160	220 x 220 x 56	yes	■	–	•	•	•	169
RER 125	138 Ø x 40	yes	■	–	•	•	•	170
RER 160	176 Ø x 54	yes	■	–	•	•	•	171

• availabe – not yet available □ Sleeve bearings ■ Ball bearings

Information on pictograms

On the pages of the catalogue and on the following overview pages, the pictograms illustrated below provide information about technically possible special versions in the fan line presented.
Please note that these special versions are not possible for all voltages and speeds, and not in all combinations.
The special versions are designed for specific customers and projects and are not usually available off the shelf.

Speed signal
The fan uses a separate wire to output information about its speed, and thus about the speed of the rotor. For technical details, please refer to page 110.

Protection against moisture
Protection for the fan's electronics against moisture and condensation. For technical details, please refer to page 123.

IP 54
Protection of motor and PCB board against splashed water and humidity. For technical details, please refer to page 123.

Protection against salt spray fog
Protection of fan against the damaging effects of salt spray fog. For technical details, please refer to page 123.

max. 42 m^3/h

AC centrifugal fans

Series RL 90 121 x 121 x 37 mm

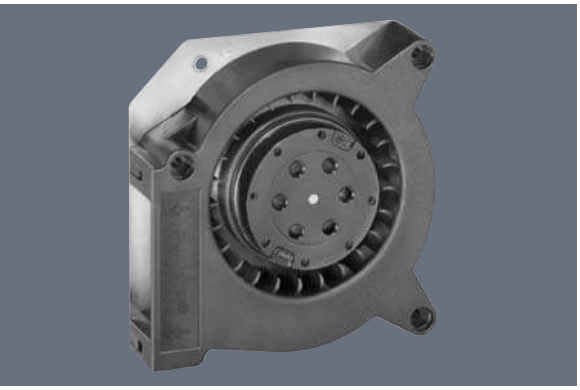

- AC centrifugal fan with external rotor shaded-pole motor. Impedance protected against overloading.
- Spiral housing and impeller of fibreglass-reinforced plastic. Housing base of galvanised steel plate. Housing base with flat plug 6.3 x 0.8 mm for protective earth.
- Direction of air flow radial, through housing port. Direction of rotation clockwise, seen on rotor.
- Electrical connection via 2 leads. Bared and tin-plated.
- Mass: 680 g.

Nominal data	Air flow	Air flow	Nominal voltage	Frequency	Sound power level	Sintec sleeve bearings / Ball bearings	Power input	Nominal speed	Temperature range	Service life L_{10} at 40 °C	at T_{max}	Curve
Type	**m^3/h**	**CFM**	**V**	**Hz**	**Bel(A)**	**□/■**	**Watts**	**RPM**	**°C**	**Hours**	**Hours**	
RL 90-18/50	40	23,5	**230**	**50**	5,6	□	20,0	2 450	-10...+50	37 500 / 30 000		1
RL 90-18/56	40	23,5	**230**	**50**	5,6	■	20,0	2 450	-30...+70	37 500 / 20 000		1
RL 90-18/00	42	24,7	**115**	**60**	6,0	□	19,5	2 550	-10...+60	37 500 / 25 000		2
RL 90-18/06	42	24,7	**115**	**60**	6,0	■	19,5	2 550	-30...+85	37 500 / 15 000		2

Fan type		Lead wires
RL 90-18/50	RL 90-18/00	AWG 18, TR 32

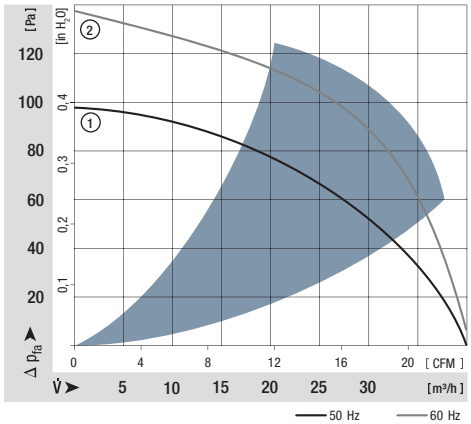

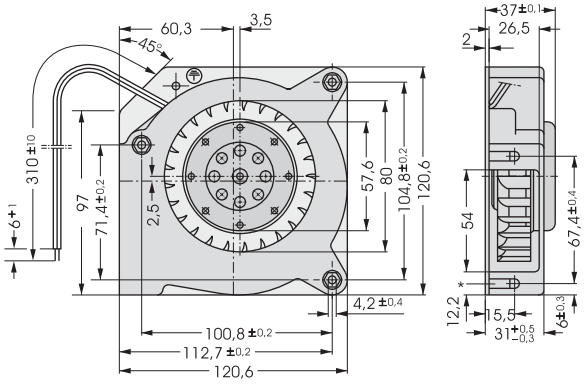

*Speed nut M4 or 8-32UNC. Screw- in depth max.12,5 min 9,0

HP IP54 SP

ebmpapst

max. 54 m^3/h

AC centrifugal fans

Series RG 90 135 x 135 x 38 mm

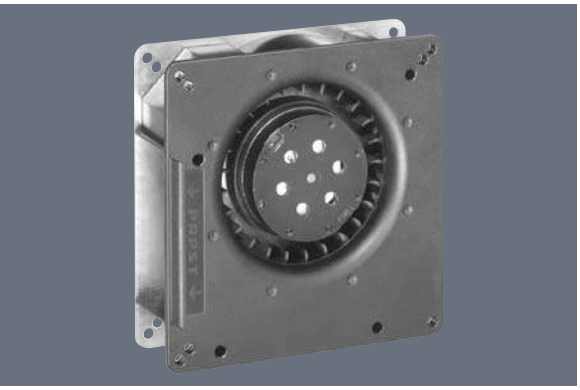

- AC centrifugal fan with external rotor shaded-pole motor. Impedance protected against overloading.
- Spiral housing and impeller of fibreglass-reinforced plastic. Housing base of galvanised steel plate.
- Direction of air flow radial, through housing port. Direction of rotation clockwise, seen on rotor.
- Electrical connection via 2 leads AWG 22. Bared and tin-plated.
- Mass: 560 g.

Nominal data	Air flow	Air flow	Nominal voltage	Frequency	Sound power level	Sintec sleeve bearings / Ball bearings	Power input	Nominal speed	Temperature range	Service life L_{10} at 40 °C	at T_{max}	Curve
Type	**m^3/h**	**CFM**	**V**	**Hz**	**Bel(A)**	**□/■**	**Watts**	**RPM**	**°C**	**Hours**	**Hours**	
RG 90-18/50	54	31,8	**230**	**50**	5,8	□	22,0	2 200	-30...+60	35 000	/ 20 000	1
RG 90-18/56	54	31,8	**230**	**50**	5,8	■	22,0	2 200	-30...+60	35 000	/ 20 000	1
RG 90-18/00	47	27,7	**115**	**60**	6,2	□	22,0	1 900	-30...+65	35 000	/ 20 000	2
RG 90-18/06	47	27,7	**115**	**60**	6,2	■	22,0	1 900	-30...+65	35 000	/ 20 000	2

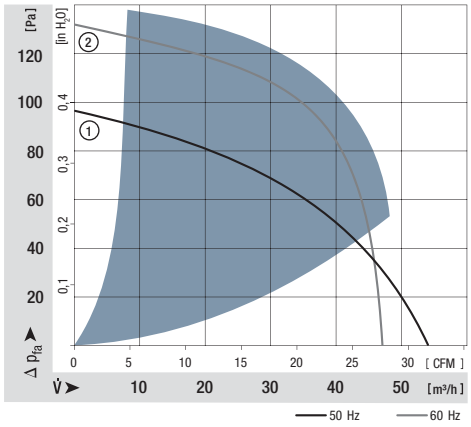

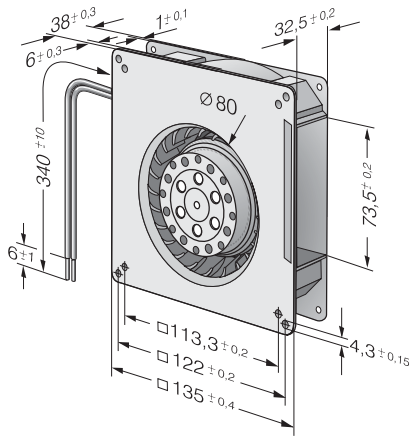

max. 94 m^3/h

AC centrifugal fans

Series RG 125 180 x 180 x 40 mm

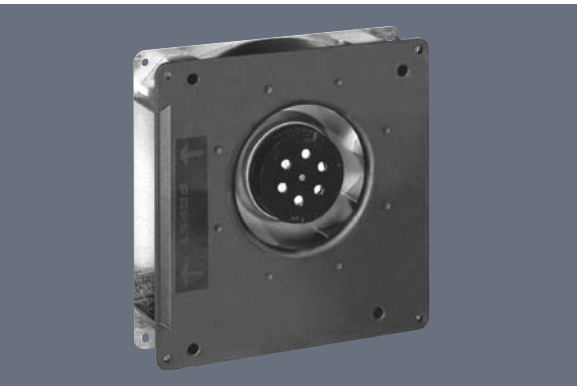

- AC centrifugal fan with external rotor shaded-pole motor. Impedance protected against overloading.
- Spiral housing and impeller of fibreglass-reinforced plastic. Housing base of galvanised steel plate.
- Direction of air flow radial, through housing port. Direction of rotation clockwise, seen on rotor.
- Electrical connection via 2 leads AWG 22. Bared and tin-plated.
- Mass: 850 g.

Nominal data	Air flow	Air flow	Nominal voltage	Frequency	Sound power level	Sintec sleeve bearings / Ball bearings	Power input	Nominal speed	Temperature range	Service life L_{10} at 40 °C	at T_{max}	Curve
Type	**m^3/h**	**CFM**	**V**	**Hz**	**Bel(A)**	**□/■**	**Watts**	**RPM**	**°C**	**Hours**	**Hours**	
RG 125-19/56	86	50,6	**230**	**50**	5,8	■	20,0	2 550	-30...+70	37 500 / 20 000		1
RG 125-19/06	94	55,3	**115**	**60**	6,0	■	19,0	2 750	-30...+80	40 000 / 15 000		2

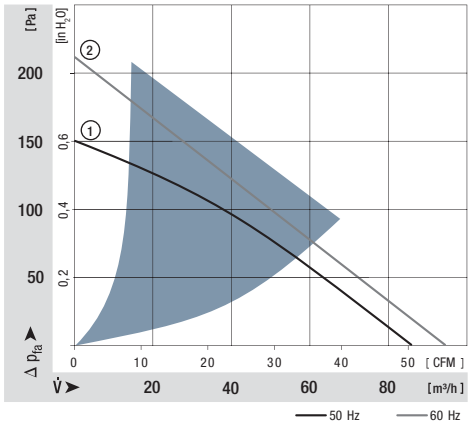

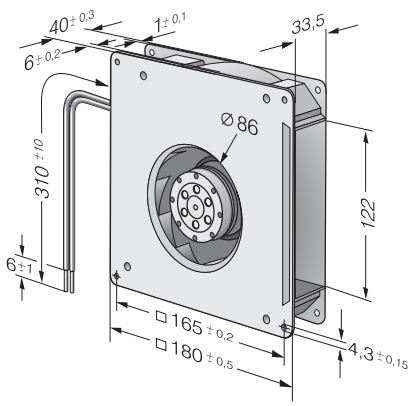

HP IP54 SP

ebmpapst

max. 223 m^3/h

AC centrifugal fans

Series RG 160 220 x 220 x 56 mm

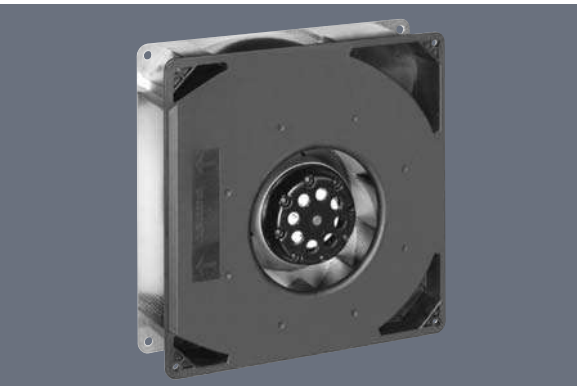

- AC centrifugal fan with external rotor shaded-pole motor. Thermal contactor as protection against thermal overloading.
- Spiral housing and impeller of fibreglass-reinforced plastic. Housing base of galvanised steel plate.
- Direction of air flow radial, through housing port. Direction of rotation counter-clockwise, seen on rotor.
- Electrical connection via leads AWG 18. Bared and tin-plated.
- Mass: 1.7 kg.

Nominal data	Air flow	Air flow	Nominal voltage	Frequency	Sound power level	Sintec sleeve bearings / Ball bearings	Power input	Nominal speed	Temperature range	Service life L_{10} at 40 °C	at T_{max}	Curve
Type	**m^3/h**	**CFM**	**V**	**Hz**	**Bel(A)**	**□/■**	**Watts**	**RPM**	**°C**	**Hours**	**Hours**	
RG 160-28/56S	202	118,9	**230**	**50**	6,6	■	47,0	2 750	-30...+70	30 000 / 15 000		1
RG 160-28/06S	223	131,3	**115**	**60**	6,9	■	50,0	3 050	-30...+80	27 500 / 12 500		2

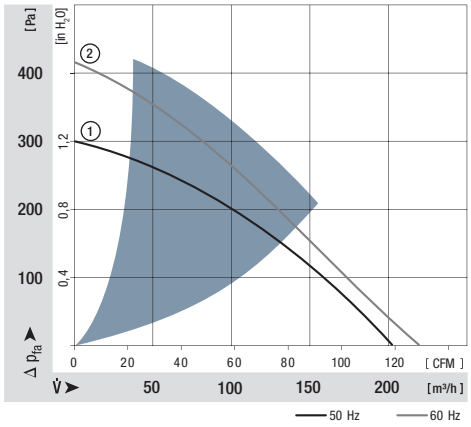

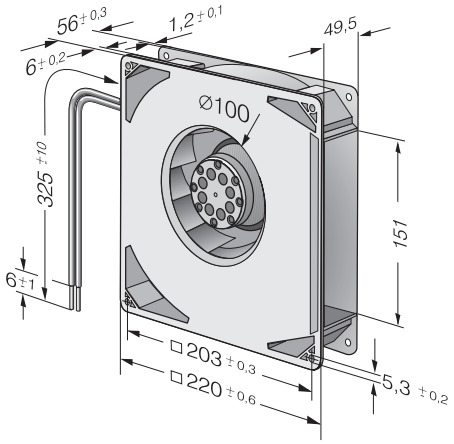

max. 115 m^3/h

AC centrifugal fans

Series RER 125 138 Ø x 40 mm



- AC centrifugal fan with external rotor shaded-pole motor. Impedance protected against overloading.
- Impeller of fibreglass-reinforced plastic, with steel plate reinforced.
- Direction of air flow radial. Direction of rotation clockwise, seen on rotor.
- Electrical connection via leads AWG 22. Bared and tin-plated.
- Mass: 500 g.

Nominal data	Air flow	Air flow	Nominal voltage	Frequency	Sound power level	Sintec sleeve bearings / Ball bearings	Power input	Nominal speed	Temperature range	Service life L_{10} at 40 °C	at T_{max}	Curve
Type	**m^3/h**	**CFM**	**V**	**Hz**	**Bel(A)**	**□/■**	**Watts**	**RPM**	**°C**	**Hours**	**Hours**	
RER 125-19/56	104	61,2	**230**	**50**	6,2	■	19,0	2 600	-30...+60	37 500 / 22 500		1
RER 125-19/06	115	67,7	**115**	**60**	6,5	■	18,0	2 850	-30...+70	40 000 / 20 000		2

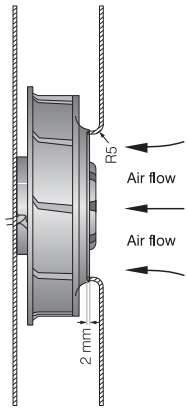

The air flow and noise level of fans without external housing depend on the installation conditions. The stated air flow and noise levels have been measured under the following conditions:
Centrifugal fan mounted on a base plate 220 x 220 mm. Cover plate 220 x 220 mm with an air inlet of Ø 86 mm, concentric to the impeller.

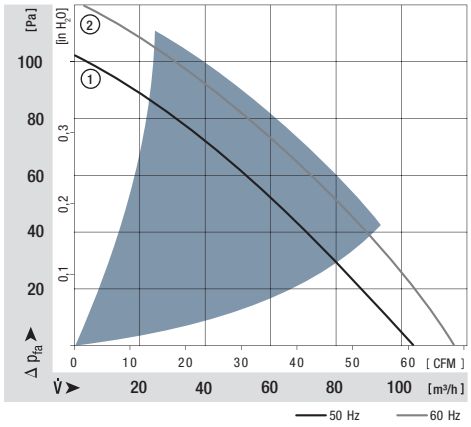

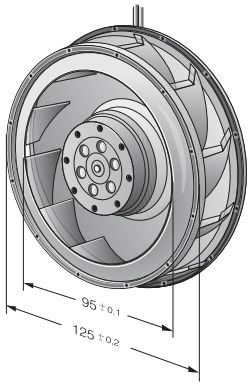

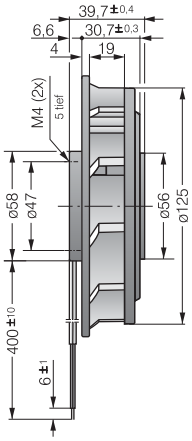

HP IP54 SP

ebmpapst

max. 274 m^3/h

AC centrifugal fans

Series RER 160 176 Ø x 54 mm



- AC centrifugal fan with external rotor shaded-pole motor. Impedance protected against overloading.
- Impeller of fibreglass-reinforced plastic, with steel plate reinforced.
- Direction of air flow radial. Direction of rotation counter-clockwise, seen on rotor.
- Electrical connection via leads AWG 18. Bared and tin-plated.
- Mass: 1.0 kg.

Nominal data	Air flow	Air flow	Nominal voltage	Frequency	Sound power level	Sintec sleeve bearings / Ball bearings	Power input	Nominal speed	Temperature range	Service life L_{10} at 40 °C at T_{max}	Curve
Type	**m^3/h**	**CFM**	**V**	**Hz**	**Bel(A)**	**□/■**	**Watts**	**RPM**	**°C**	**Hours Hours**	
RER 160-28/56S	234	137,7	**230**	**50**	6,6	■	45,0	2 800	-30...+60	30 000 / 20 000	1
RER 160-28/06S	274	161,3	**115**	**60**	6,8	■	46,0	3 250	-30...+70	30 000 / 15 000	2

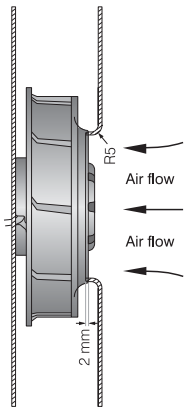

The air flow and noise level of fans without external housing depend on the installation conditions. The stated air flow and noise levels have been measured under the following conditions:
Centrifugal fan mounted on a base plate 260 x 260 mm. Cover plate 260 x 260 mm with an air inlet of Ø 100 mm, concentric to the impeller.

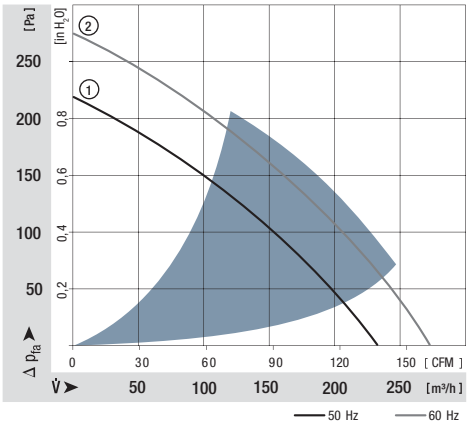

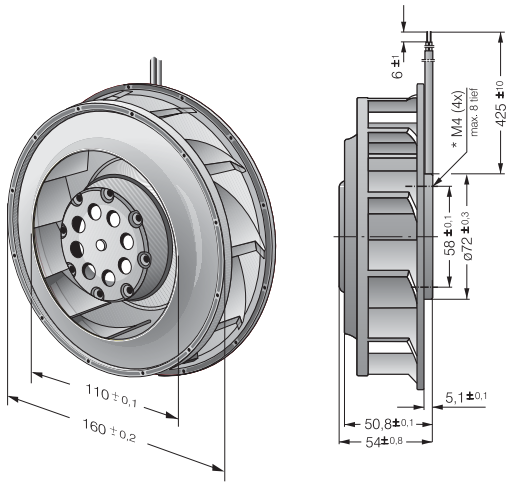

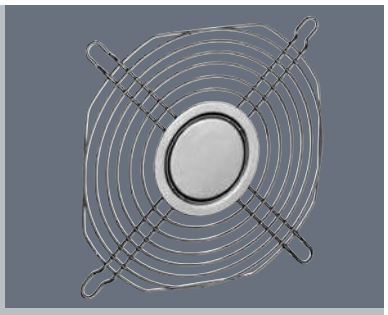

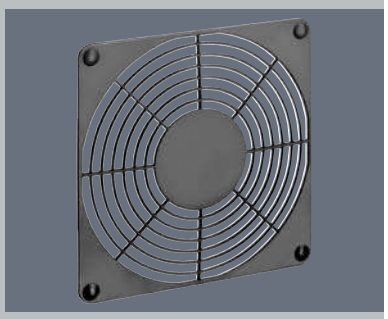

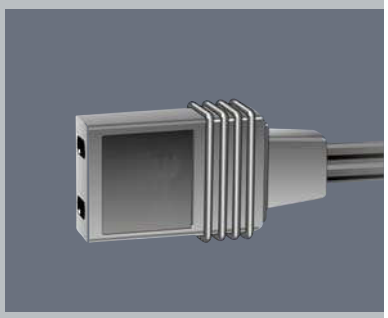

Accessories

	Guard grilles	174
	Fan filter guard grilles	180
	Inlet nozzles	182
	Connection cables / Accessories	183

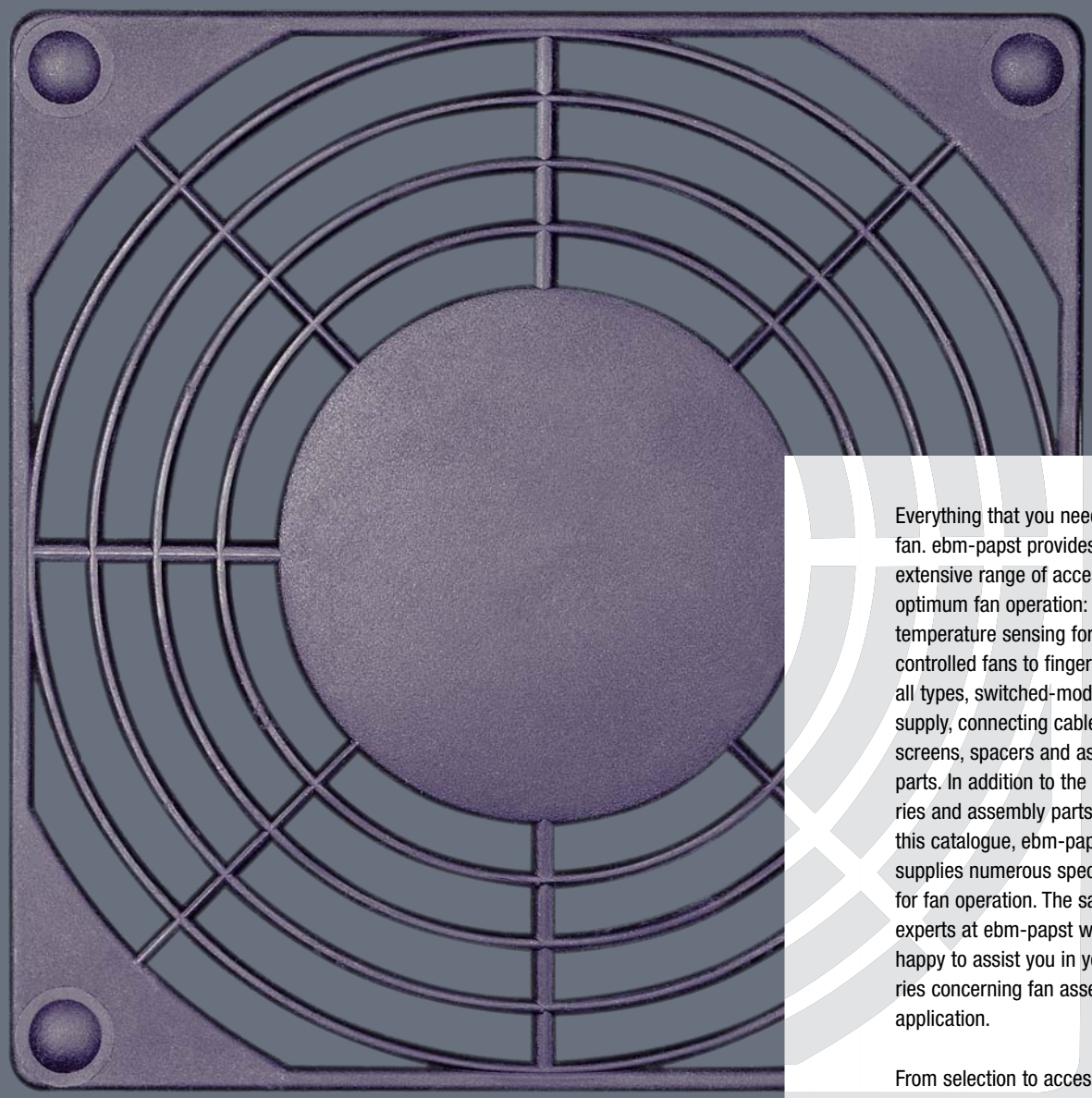

Everything that you need for your fan. ebm-papst provides an extensive range of accessories for optimum fan operation: From temperature sensing for speed-controlled fans to finger guards of all types, switched-mode power supply, connecting cable, filter, screens, spacers and assembly parts. In addition to the accessories and assembly parts listed in this catalogue, ebm-papst also supplies numerous special parts for fan operation. The sales experts at ebm-papst will be happy to assist you in your enquiries concerning fan assembly and application.

From selection to accessories: Insist on the efficient and reliable service provided by ebm-papst.

Guard grilles

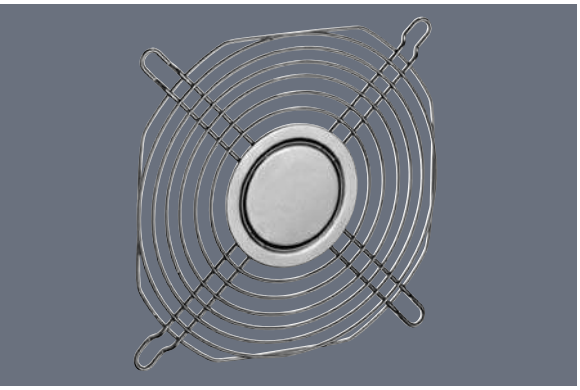

- Guard grille acc. to DIN EN ISO 13857 (previously EN 294), made of galvanised or nickel-plated and passivated steel wire for device fans.
- Additional guard grilles that do not conform to DIN EN ISO 13857 are available on request.
- Our guard grilles are specially designed for use with ebm-papst fans. Their design ensures maximum safety with minimum effect on the operating noise level. Note that when using guard grilles from other manufacturers, compliance with safety-related distances will not always be present.

Fan series	Guard grilles
400	LZ29-1
500	LZ31
600	LZ28-1
3000	LZ23-1
8000	LZ32-4 / LZ22-2
9000	LZ30-4 / LZ 30
4000	LZ30-4 / LZ 30
5100	LZ25

Fan series	Guard grilles
5600	LZ25
5200	LZ35
5300	LZ53
5900	LZ35
7000	LZ36
6300	LZ37
6400	LZ38
2200F	LZ22

Fan series	Guard grilles	
DV 6200	LZ37	Intake side
DV 6200	LZ39	Outlet side
DV 6400	LZ38	Intake side
DV 6400	LZ39	Outlet side

LZ29-1 Fan size 40 x 40

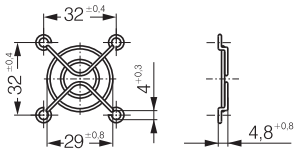

LZ31 Fan size 50 x 50

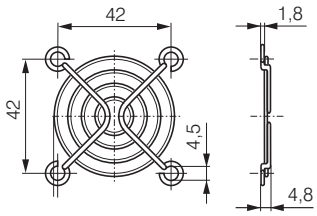

LZ28-1 Fan size 60 x 60

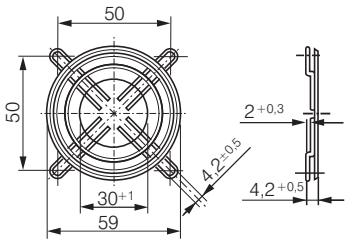

LZ23-1 Fan size 92 x 92

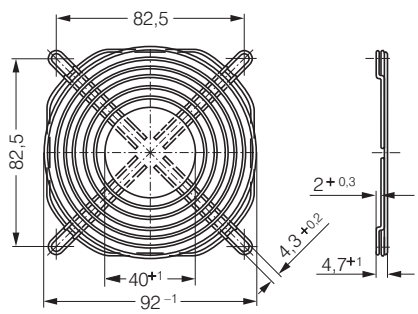

LZ32-4 Fan size 80 x 80

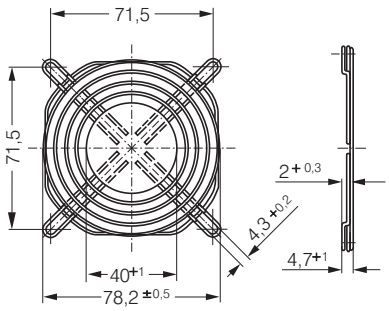

LZ30-4 Fan size 119 x 119

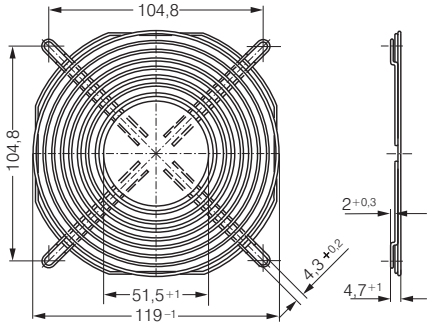

ebmpapst

LZ25 Fan size 135 x 135

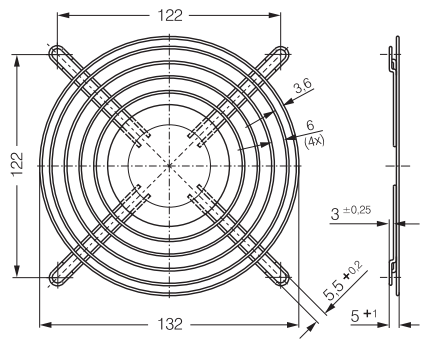

LZ35 Fan size 127 x 127

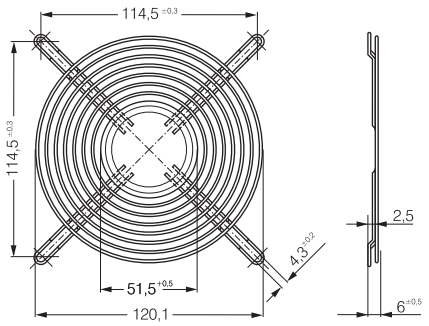

LZ36 Fan size 150 x 172

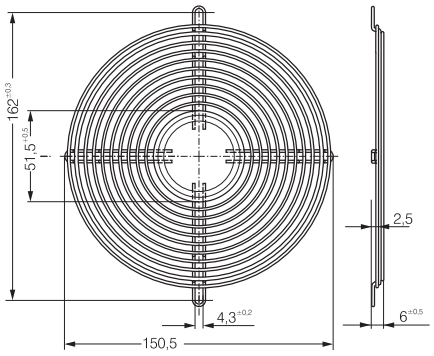

LZ37 Fan size 172 Ø x 51

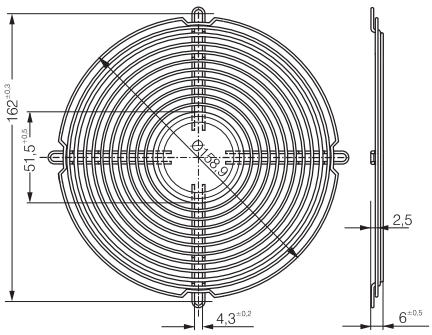

LZ38 Fan size 172 Ø x 51

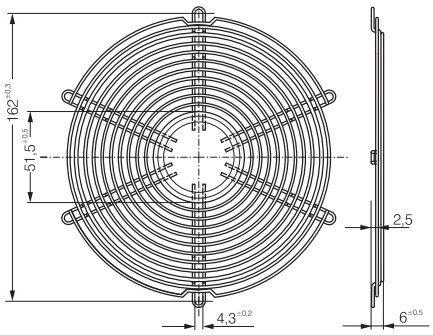

LZ39 Fan size 172 Ø x 51

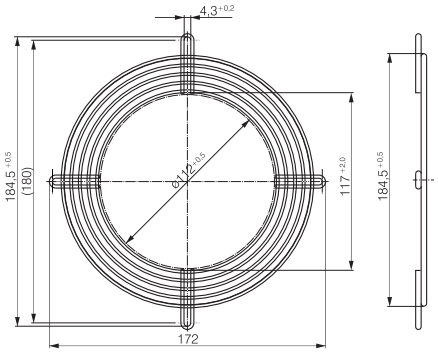

LZ53 Fan size 140 x 140

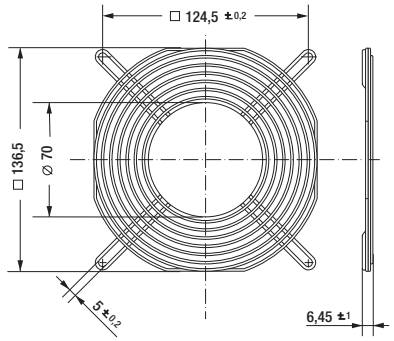

LZ30 Fan size 119 x 119

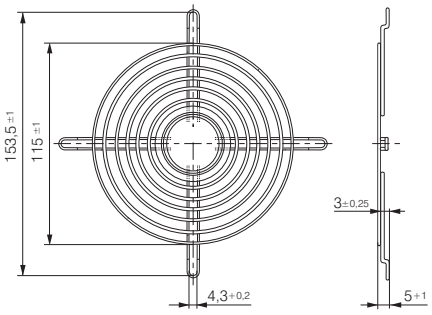

LZ22-2 Fan size 80 x 80

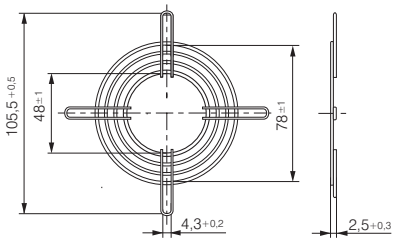

LZ22 Fan size 200 x 51

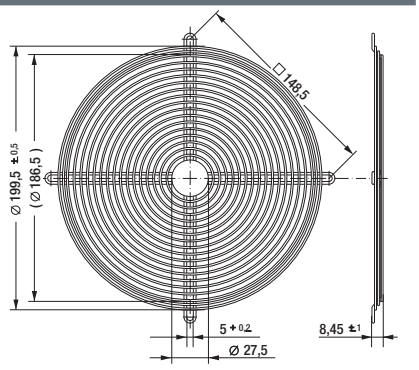

ACmaxx guard grilles

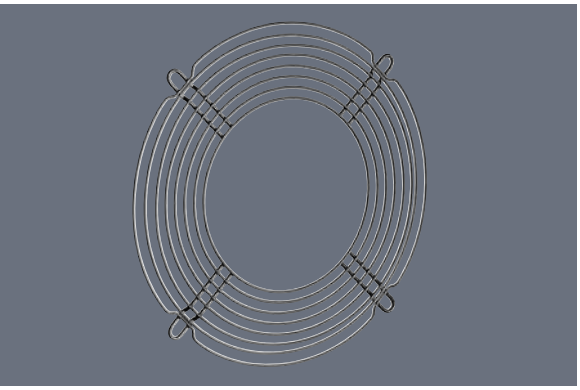

– Guard grille acc. to DIN EN ISO 13857 (previously EN 294), made of galvanised or nickel-plated and passivated steel wire for device fans.
– The guard grilles shown on this page are designed specially for ACmaxx series fans and are installed on the outlet side.

Fan series	Guard grilles	
AC 8300	LZ32-4	Intake side s.P.174
AC 8300 H	LZ32-7	Outlet side
AC 3200 J	LZ23-1	Intake side s.P.174
AC 3200 J	LZ23-6	Outlet side
AC 4400 FN	LZ30-4	Intake side s.P.174
AC 4400 FN	LZ30-9	Outlet side
AC 4300	LZ30-4	Intake side s.P.174
AC 4300	LZ30-9	Outlet side
ACi 4400	LZ30	Intake side s.P.175
ACi 4400	LZ30	Outlet side s.P.175

Fan series	Guard grilles	
AC 6200 N	LZ37	Intake side s.P.175
AC 6200 N	LZ37-2	Outlet side
AC 6100 N	LZ37	Intake side s.P.175
AC 6100 N	*	Outlet side

*Outlet-side grilles on request

LZ30-9 Fan size 119 X 119

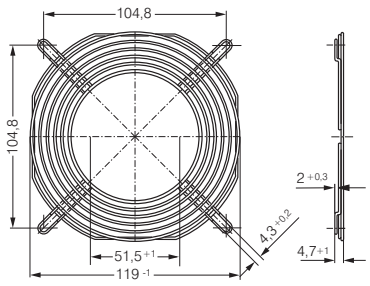

LZ37-2 Fan size 172 Ø X 51

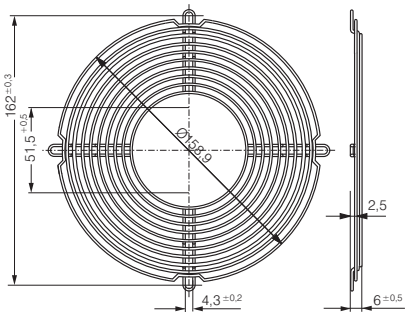

LZ23-6 Fan size 92 x 92

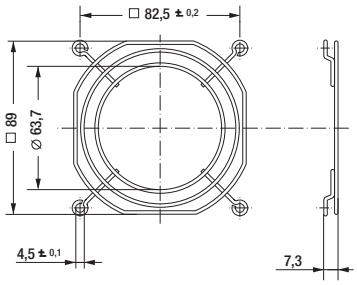

LZ32-7 Fan size 80 x 80

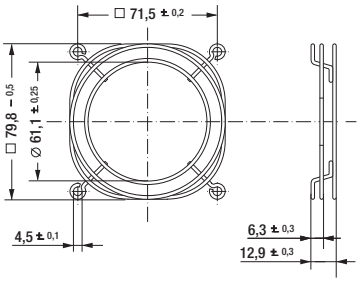

ebmpapst

Guard grilles

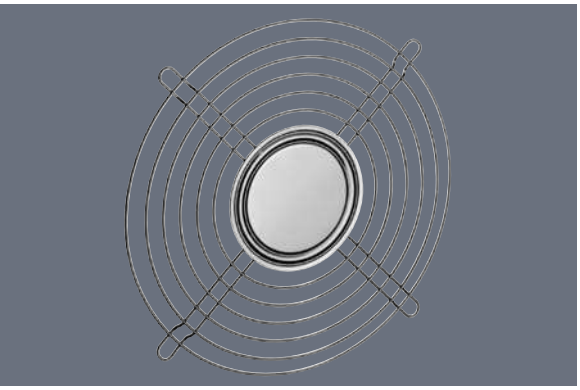

– Steel wire, plastic-coated, silver-metallic gloss.

Fan series	Guard grilles
W1G 200	78128-2-4039
W1G 250	09418-2-4039
W2E 200	78128-2-4039

Fan series	Guard grilles
W4S 200	78128-2-4039
W2E 250	09418-2-4039

78128-2-4039 **Size 200**

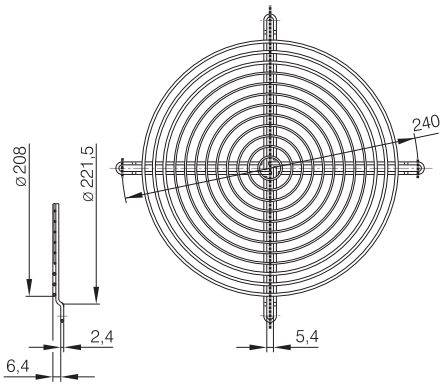

09418-2-4039 **Size 250**

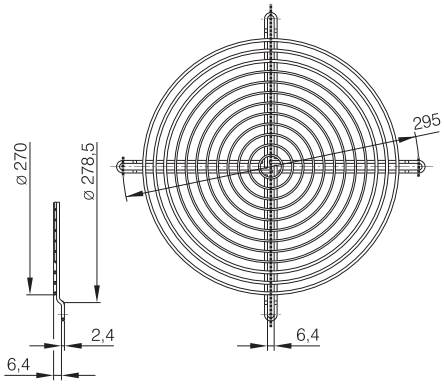

Guard grilles

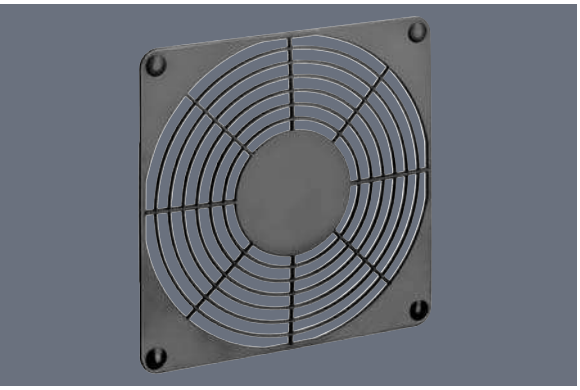

– Guard grille acc. to DIN EN ISO 13857 (previously EN 294), made of fibreglass-reinforced plastic.
– Plastic grilles must not be used for the following models:
  8200 JH3 / JH4
  3200 JH3 / JH4
  4100 NH5 - NH8

Guard grilles	Mounting	B	C	D	E
LZ32-2	A1	$80^{-0,5}$	$71,5^{\pm0,2}$	7,0	34
LZ32-3	A3	$80^{-0,5}$	$71,5^{\pm0,2}$	7,0	34
LZ23-2	A1	$92,5^{-0,5}$	$82,5^{\pm0,2}$	6,5	46
LZ23-3	A3	$92,5^{-0,5}$	$82,5^{\pm0,2}$	6,5	46

Guard grilles	Mounting	B	C	D	E
LZ30-5	A2	$119^{-0,5}$	$105^{\pm0,2}$	6,5	50
LZ30-6	A4	$119^{-0,5}$	$105^{\pm0,2}$	6,5	50
LZ33-1	A2	$127^{-0,5}$	$113,5^{\pm0,2}$	6,5	50
LZ33-2	A4	$127^{-0,5}$	$113,5^{\pm0,2}$	6,5	50

LZ32-2 / LZ32-3	Size 80 x 80
LZ23-2 / LZ23-3	Size 92 x 92
LZ30-5 / LZ30-6	Size 119 x 119
LZ33-1 / LZ33-2	Size 127 x 127

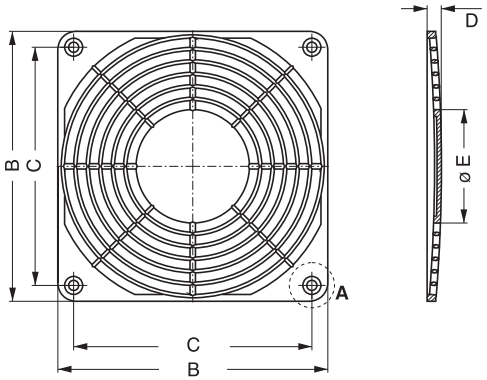

Screw connection

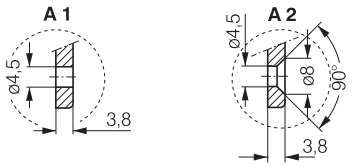

Barbed inserts

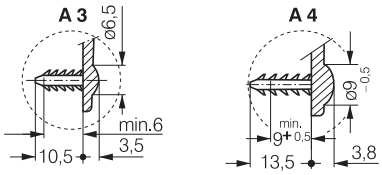

Suitable for bore diameters 4.3 - 4.7 only.

LZ32P	Fan size 80 x 80

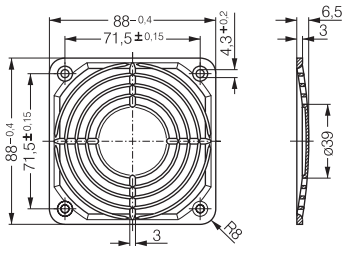

LZ30P	Fan size 119 x 119

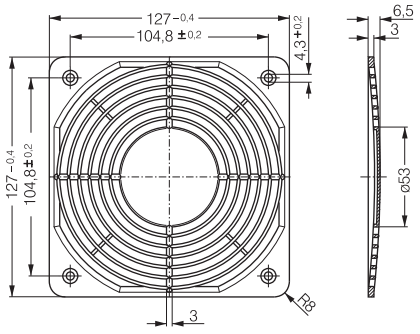

ebmpapst

Guard grilles

for compact centrifugal modules



– PA plastic 6, fibreglass-reinforced

Fan series	Guard grilles	a	b
RG 190	LZ46	133	9,0
RG 220	LZ47	166	8,7
RG 225	LZ48	158	8,7

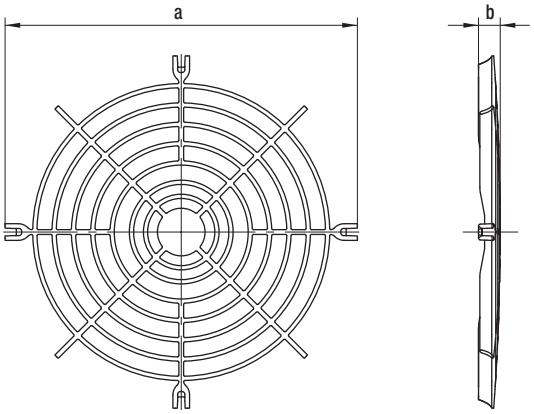

Fan filter guard grilles

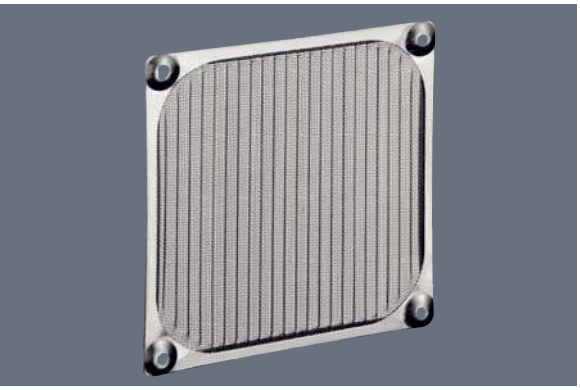

- Filter guard grilles consist of a mounting plate, filter and screen.
- Screen LZ40 N made of black, fibreglass-reinforced plastic with inserted wire netting LZ60.
- Filter LZ60 made of Nirosta stainless steel wire netting.
- Mounting plate LZ40-1 for installation.

Fan series DC	Fan series AC
4400 F	AC 4300
4400 FN	9900
4300	4000 N
4300 N	4000 Z
4400	
4200	
4100 N	

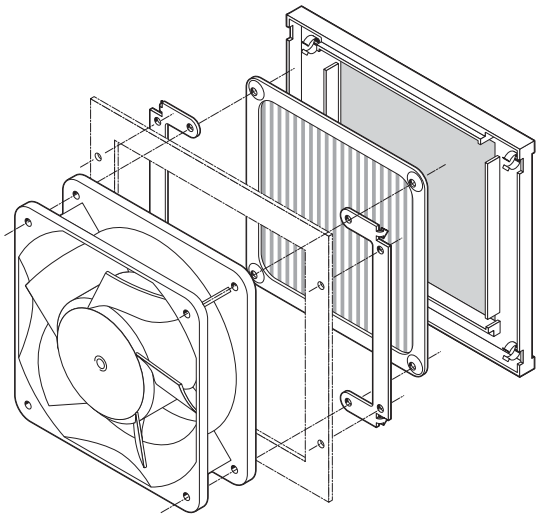

LZ40N Screen

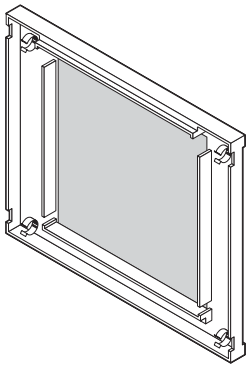

LZ40-1 Bracket

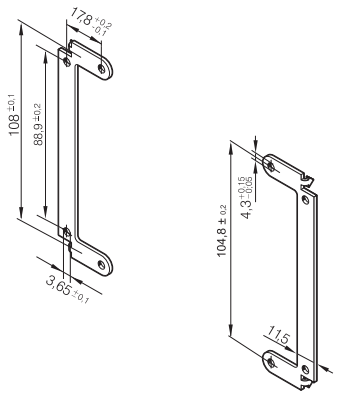

LZ60 Filter

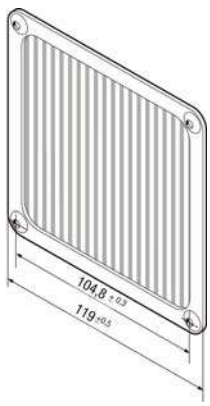

Fan filter guard grilles

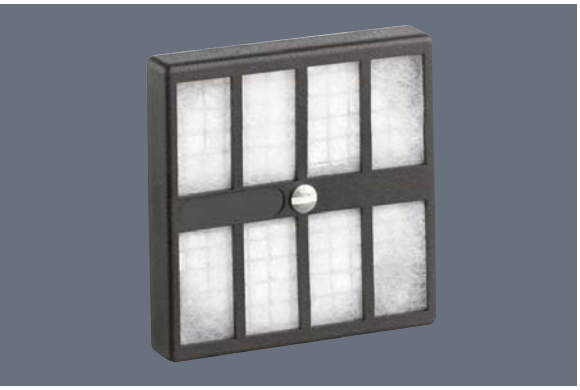

- Filter guard grille suitable for attachment to axial fan series of size 60 mm, 80 mm, 92 mm, 119 mm, ø 172 mm. All filter units fit directly onto the existing installation holes of the fans.
- Filter guard grille consisting of 3 parts: outer grille barrier, inner fastening plate and replaceable filter mat.
- Grille barrier made of moulded polycarbonate (PC), with matted surface.
- Fast and easy exchange of filter mat via a quick release on the grille barrier.
- Fastening plate made of wire netting, with black powder coating.
- Filter mat can be replaced while the fan is running, protection provided by welded wire netting.
- Filter mat made of white, synthetically bonded fibres.

Protection filter	Fan size	A	B	C	D	Replacement filter*
FF60	60 x 60 mm	65	65	13,5	50,0	RF 60
FF80	80 x 80 mm	85	85	14,0	71,5	RF 80
FF92	92 x 92 mm	125	105	17,5	82,5	RF 92
FF119	119 x 119 mm	162	136	18,5	104,5	RF 119
FF172	ø 172 mm	226	190	19,5	162,0	RF 172

* Replacement filters only in packs of 5.

FF60 / FF80

Fan size: 60 x 60 mm
80 x 80 mm

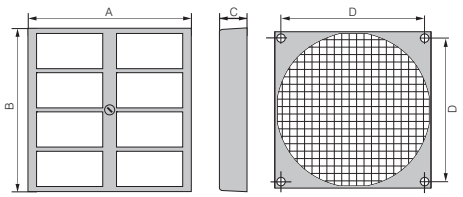

FF92 / FF 119

Fan size: 92 x 92 mm
119 x 119 mm

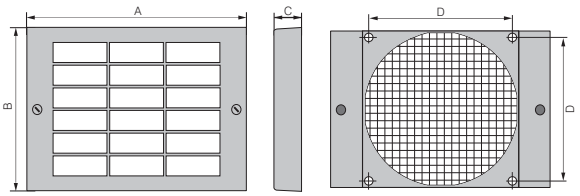

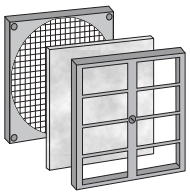

Filter capacity
A fan filter guard filters out up to 75% of dust particles up to a size of 5-10 microns and withstands temperatures of up to 100°C. Flame retardant in accordance with DIN 53438, grade F1. For installed, clean filters, an air flow reduction of 20 – 30% can be assumed.

FF 172

Fan size: ø172 mm

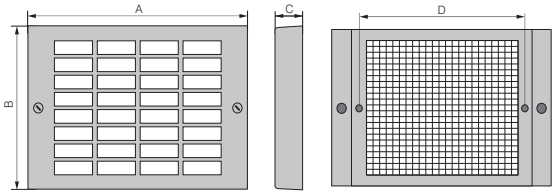

Inlet nozzles

for centrifugal fans

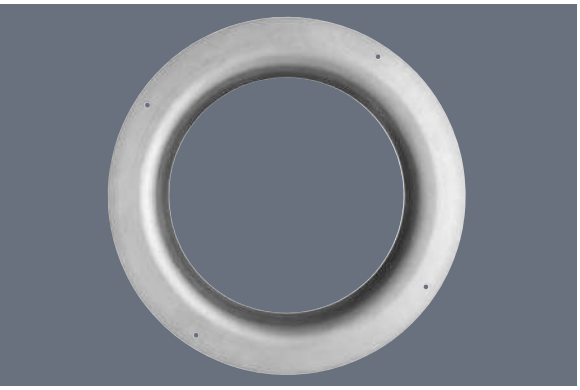

– Material: Sheet steel, galvanised

Fan		Vers.	k	m	o	q	r_1	s	t	u	No.:
RET 97	(S)	1	116,0	80,0	10,0	0,80	10,0	108,0	3x4,5	–	LZ 1000-097
RER 120	(P)	1	146,0	94,4	18,0	0,80	16,0	134,0	4x4,5	126,0	LZ 1000-120
RER 133	(P)	1	129,0	87,0	13,0	1,00	8,0	118,0	4x4,5	103,0	LZ 1000-133
RER 175 / 190	(P)	1	170,0	125,5	14,0	1,25	10,0	158,0	4x4,5	146,0	LZ 1000-175
RER 220	(P)	2	252,0	155,0	21,0	0,80	22,0	–	–	199,0	LZ 1000-220
RER 225	(P)	1	223,0	146,0	28,0	1,50	25,0	210,0	4x4,5	196,0	LZ 1000-225

(P) = plastic, (S) = sheet steel

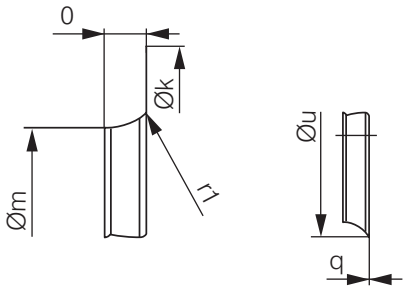

Vers. 1

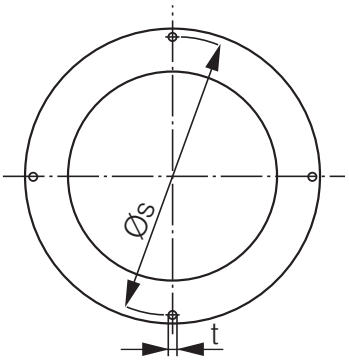

Vers. 2

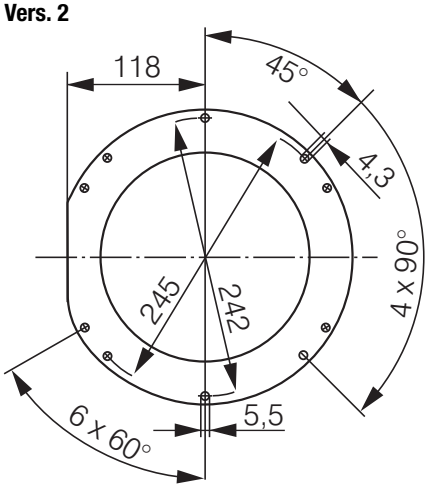

ebmpapst

Connector cables

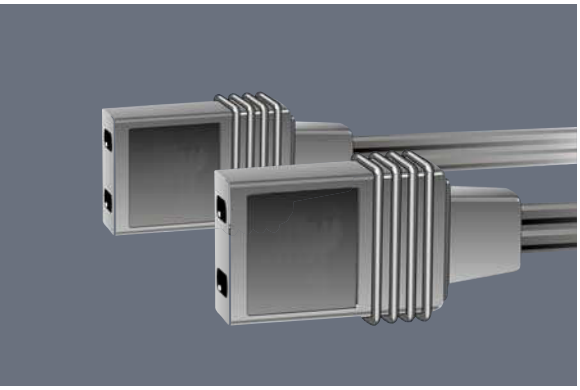

- Connector cable with injection-moulded plug in various lengths.
- Strand ends with core-crimping sleeve, core-end sleeve or tin-plated.
- Straight or angled plug.
- For all types of fan with flat plug 2.8 / 3.0 x 0.5.

Plug model	L1 (mm)	Leads	Plug	Leads end	Lead colour	Receptacle for tabs	Application
LZ120	610	0,5 mm^2	G	C	black/black	2,8 x 0,5	AC
LZ120-4	2 000	0,5 mm^2	G	A	black/black	2,8 x 0,5	AC
LZ120-5	380	0,5 mm^2	W	B	red/black	2,8 x 0,5	DC
LZ120-6	610	0,5 mm^2	W	B	red/black	2,8 x 0,5	DC
LZ120-11	2 000	0,5 mm^2	G	A	red/black	2,8 x 0,5	DC
LZ120-16	800	0,5 mm^2	G	B	black/black	2,8 x 0,5	AC
LZ120-18	4 000	0,5 mm^2	G	A	black/black	2,8 x 0,5	AC
LZ126	1 000	0,5 mm^2	G	C	black/black	2,8 x 0,5	AC
LZ127	1 600	0,5 mm^2	G	B	black/black	2,8 x 0,5	AC
LZ130-1	610	0,82 mm^2	G	C	black/black	2,8 x 0,5	AC
LZ140	610	0,73 mm^2	G	B	black/black	2,8 x 0,8	AC

Connector cable **Straight plug (G)**

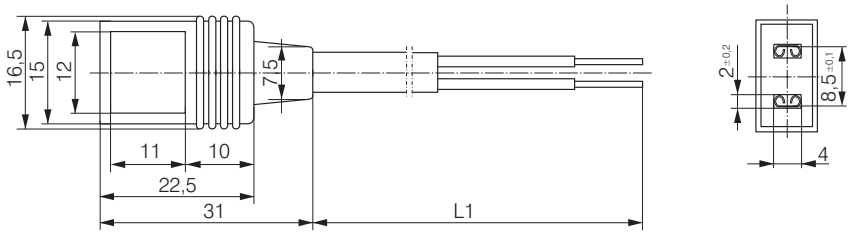

Connector cable **Angled plug (W)**

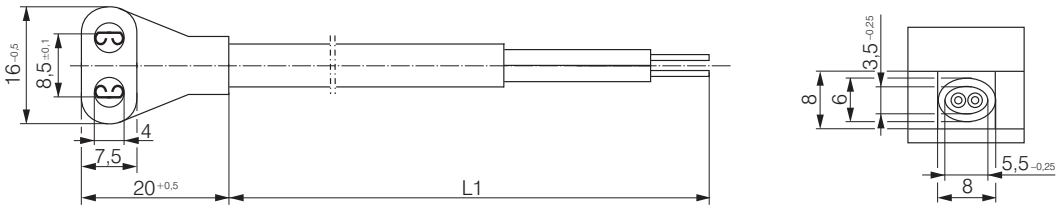

Core crimp sleeve **Leads end A**

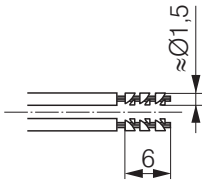

Tin-plated **Leads end B**

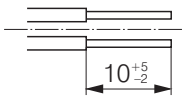

Core end sleeve **Leads end C**

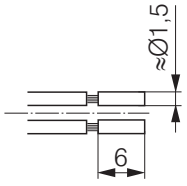

Accessories

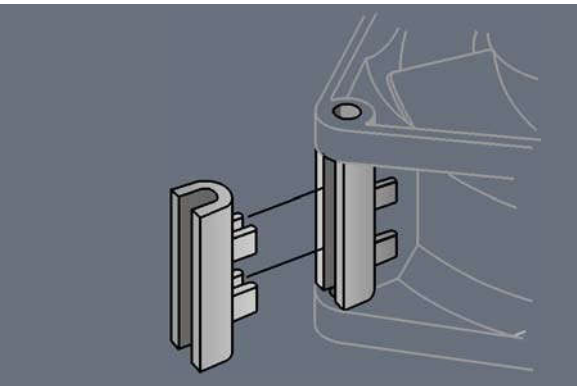

In addition to the accessories and assembly parts listed in this catalogue, ebm-papst also supplies numerous special parts for fans. The sales experts at ebm-papst will be happy to assist you in your enquiries concerning fan assembly and application.

Fan series	Accessories
8300	LZ212 / LZ260
8400 N	LZ261
3300	LZ212 / LZ260
3400 N	LZ261
9000	LZ210
4000	LZ210
4300	LZ212 / LZ260
8300	LZ212

Fan series	Accessories
5100	LZ210
5600	LZ210
5200	LZ210
5900	LZ210
7000	LZ210
VARIOFAN	LZ370

LZ212

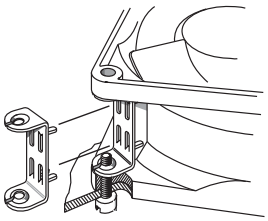

Screw clip of stainless steel.
For mounting fans with threaded pin 3.5 DIN EN ISO 1478 (7970).

LZ260/LZ261

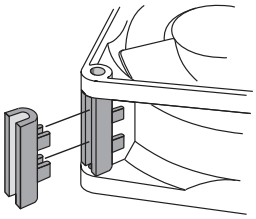

Spacer of fibreglass reinforced plastic. For screw mounting over both fan mounting flanges.

LZ210



Screw clip of hardened steel. For mounting fans with threaded pin 6-32 UNC and/or 3.5 DIN 7970.

LZ370



Required performance data:

R_{25}	= 100 KΩ ±5% @25°C
B-value	= 4190 ±2%
P_{max}	= 0,25 W

Temperature sensor for speed-controlled fan operation. Temperature range 30...50 °C.

LZ550

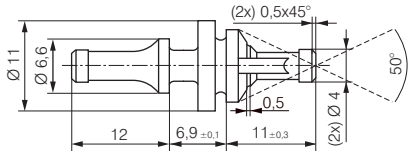

Rubber anti-vibration mounts
for fans with a hole ø of 4.3 ±0.2 mm and flange thickness of 3 - 5.5 mm.
For a carrier plate with a hole ø of 6.5 ±0.15 mm and plate thickness of 1 - 2 mm.

fan agent
compact fan agent
motor specialist
motor agent

ebm-papst in Germany

Germany

ebm-papst
Mulfingen GmbH & Co. KG

Bachmühle 2
D-74673 Mulfingen
Phone +49 7938 81-0
Fax +49 7938 81-110
info1@de.ebmpapst.com

www.ebmpapst.com

ebm-papst
St. Georgen GmbH & Co. KG

Hermann-Papst-Straße 1
D-78112 St. Georgen
Phone +49 7724 81-0
Fax +49 7724 81-1309
info2@de.ebmpapst.com

www.ebmpapst.com

ebm-papst
Landshut GmbH

Hofmark-Aich-Straße 25
D-84030 Landshut
Phone +49 871 707-0
Fax +49 871 707-465
info3@de.ebmpapst.com

www.ebmpapst.com

Agencies

Berlin
Dipl.-Ing. (TH) Jens Duchow
Händelstraße 7
D-16341 Panketal
Phone +49 30 944149-62
Fax +49 30 944149-63
Jens.Duchow@de.ebmpapst.com

Bielefeld
Dipl.-Ing. (FH) Wolf-Jürgen Weber
Niehausweg 13
D-33739 Bielefeld
Phone +49 5206 91732-31
Fax +49 5206 91732-35
Wolf-Juergen.Weber@de.ebmpapst.com

Dortmund
Dipl.-Ing. (FH) Hans-Joachim Pundt
Auf den Steinern 3
D-59519 Möhnesee-Völlinghausen
Phone +49 2925 800-407
Fax +49 2925 800-408
Hans-Joachim.Pundt@de.ebmpapst.com

Frankfurt
Dipl.-Ing. Christian Kleffmann
Dr.-Hermann-Krause-Straße 23
D-63452 Hanau
Phone +49 6181 1898-12
Fax +49 6181 1898-13
Christian.Kleffmann@de.ebmpapst.com

Halle
Dipl.-Ing. (TU) Michael Hanning
Lercheneck 4
D-06198 Salzatal / OT Lieskau
Phone +49 345 55124-56
Fax +49 345 55124-57
Michael.Hanning@de.ebmpapst.com

Hamburg
Ingenieurbüro Breuell GmbH
Ing. Dirk Kahl
Elektroingenieur
Grützmühlenweg 40
D-22339 Hamburg
Phone +49 40 538092-19
Fax +49 40 538092-84
Dirk.Kahl@de.ebmpapst.com

Heilbronn / Heidelberg
Dipl.-Ing. Mark Gartner
Gehrweg 12
D-74199 Unterheinriet
Phone +49 7130 404569-1
Fax +49 7130 404569-2
Mark.Gartner@de.ebmpapst.com

Kassel
Dipl.-Ing. (FH) Ralph Brück
Hoherainstraße 3 b
D-35075 Gladenbach
Phone +49 6462 4071-10
Fax +49 6462 4071-11
Ralph.Brueck@de.ebmpapst.com

Koblenz
Winfried Schaefer
Hinter der Kirch 10
D-56767 Uersfeld
Phone +49 2657 16-96
Fax +49 2657 16-76
Winfried.Schaefer@de.ebmpapst.com

Munich
Dipl.-Wirt.-Ing. (FH) Jens Peter
Uhlandstraße 6
D-74427 Fichtenberg
Phone +49 7971 260-180
Fax +49 7971 260-221
Jens.Peter@de.ebmpapst.com

Nuremberg
Dipl.-Wirt.-Ing. (FH) Axel Resch
Steinsfeldstraße 80
D-74626 Bretzfeld
Phone +49 7946 94401-02
Fax +49 7946 94401-03
Axel.Resch@de.ebmpapst.com

Offenburg
Dipl.-Ing. (FH) Ralf Braun
Hubeneck 21
D-77704 Oberkirch
Phone +49 7802 9822-52
Fax +49 7802 9822-53
Ralf.Braun@de.ebmpapst.com

Stuttgart
Dipl.-Ing. (FH) Rudi Weinmann
Hindenburgstraße 100/1
D-73207 Plochingen
Phone +49 7153 9289-80
Fax +49 7153 9289-81
Rudi.Weinmann@de.ebmpapst.com

Ulm
M.Sc. Reinhard Sommerreißer
Am Silbermannpark 10
D-86161 Augsburg
Phone +49 821 6610-7023
Fax +49 821 6610-7024
Reinhard.Sommerreisser@de.ebmpapst.com

Distributors

Burgdorf
ETB Electronic Team
Beratungs- u. Vertriebs GmbH
Wundramweg 1
31303 Burgdorf
Phone +49 5136 97229-30
Fax +49 5136 97229-39
info@etb-electronic.de
www.etb-electronic.de

Frankfurt
R.E.D. Handelsgesellschaft mbH
Gutenbergstraße 3
D-63110 Rodgau - Jügesheim
Phone +49 6106 841-0
Fax +49 6106 841-111
info@red-elektromechanik.de
www.red-elektromechanik.de

Arrow Central Europe GmbH
Max-Planck-Straße 1-3
63303 Dreieich
Phone +49 6103 304-8
Fax +49 6103 304-8562
spoerle@spoerle.e-mail.com
www.spoerle.com

Hamburg
Breuell + Hilgenfeldt GmbH
Grützmühlenweg 40
D-22339 Hamburg
Phone +49 40 538092-20
Fax +49 40 538092-84
info@breuell-hilgenfeldt.de

Walter Kluxen GmbH
Neuer Höltigbaum 6
20097 Hamburg
Phone +49 40 237010
Fax +49 40 23701309

ebm-papst in Germany and Europe

Klausdorf
ETB Electronic Team
Beratungs- u. Vertriebs GmbH
Zossener Straße 27
15838 Klausdorf
Phone +49 33703 69-0
Fax +49 33703 69-149
info@etb-electronic.de
www.etb-electronic.de

Munich
A. Schweiger GmbH
Ohmstraße 1
D-82054 Sauerlach
Phone +49 8104 897-0
Fax +49 8104 897-90
info@schweiger-gmbh.de
www.schweiger-gmbh.com

Multi-Bauelemente-Service
Vertrieb von elektr. Bauelementen GmbH
Römerstraße 8
85661 Forstinning
Phone +49 8121 2506-0
Fax +49 8121 2506-200
multi.bauelemente@mbs.to

● *Express* **Service-Center** (1 to 5 pieces)

North
Breuell + Hilgenfeldt GmbH
Grützmühlenweg 40
D-22339 Hamburg
Phone +49 40 538092-20
Fax +49 40 538092-84
ebmpapst@breuell-hilgenfeldt.de

South
Scheffel
elektrotechnischer Vertrieb GmbH
Aischbach 1
70839 Gerlingen
Phone +49 7156 28357
Fax +49 7156 49425
info@ebmpapst-service.de

Europe

Austria
ebm-papst Motoren & Ventilatoren GmbH
Straubingstraße 17
A-4030 Linz
Phone +43 732 321150-0
Fax +43 732 321150-20
info@at.ebmpapst.com
www.ebmpapst.at

Avnet Time Vienna
Diefenbachgasse 35/2
A-1150 Vienna
Phone +43 1 8664 20
Fax +43 1 8664 2250
TimeAustria@avnet.com
www.avnettime.com

Belarus
ebm-papst Bel AgmbH
P.O. Box 117
BY-220138 Minsk
Phone +375 17 3851556
Fax +375 17 3851556
info@by.ebmpapst.com
www.ebmpapst.by

Belgium
ebm-papst Benelux B.V.
Sales office Belgium-Luxemburg
Romeinsestraat 6/0101
Research Park Haasrode
B-3001 Heverlee-Leuven
Phone +32 16 396-200
Fax +32 16 396-220
info@be.ebmpapst.com
www.ebmpapst.be

Avnet Time Diegem
Eagle Building
Kouterveldstraat 20
B-1831 Diegem
Phone +32 27 099003
Fax +32 27 099801
TimeBe@avnet.com
www.avnettime.com

Bulgaria
ebm-papst Romania S.R.L.
Str. Tarnavei Nr. 20
RO-500327 Brasov
Phone +40 268 312-805
Fax +40 268 312-805
dudasludovic@xnet.ro

Compex Ges.m.b.H
Wurlitzergasse 10/3
A -1160 Wien
Phone +43 1 4804223
Fax +43 1 4864230
compex.wien@utanet.at

Croatia
ebm-papst Industries Kft.
Ezred u. 2.
H-1044 Budapest
Phone +36 1 8722-190
Fax +36 1 8722-194
office@hu.ebmpapst.com

Compex Ges.m.b.H
Wurlitzergasse 10/3
A -1160 Wien
Phone +43 1 4804223
Fax +43 1 4864230
compex.wien@utanet.at

Czech Republic / Slovakia
ebm-papst CZ s.r.o.
Kaštanová 34a
CZ-620 00 Brno
Phone +420 544 502-411
Fax +420 547 232-622
info@ebmpapst.cz
www.ebmpapst.cz

fan agent
compact fan agent
motor specialist
motor agent

ebm-papst in Europe

Denmark
ebm-papst Denmark ApS
Vallensbækvej 21
DK-2605 Brøndby
Phone +45 43 631111
Fax +45 43 630505
mail@dk.ebmpapst.com
www.ebmpapst.dk

Estonia
ebm-papst Oy, Eesti Filiaal
Kesk tee 13
Aaviku küla, Jüri Tehnopark
EST-75301 Rae Vald, Harjumaa
Phone +372 65569-78
Fax +372 65569-79
www.ebmpapst.ee

Finland
ebm-papst Oy
Puistotie 1
FIN-02760 Espoo
Phone +358 9 887022-0
Fax +358 9 887022-13
mailbox@ebmpapst.fi
www.ebmpapst.fi

France
ebm-papst SARL
ZI Nord - rue A. Mohler
BP 62
F-67212 Obernai-Cedex
Phone +33 820 326266
Fax +33 3 88673883
info@ebmpapst.fr
www.ebmpapst.fr

Greece
Helcoma
Th. Rotas & Co OE
Davaki 65
GR-17672 Kallithea-Attiki
Phone +30 210 9513-705
Fax +30 210 9513-490
contact@helcoma.gr
www.helcoma.gr

Assimacopoulos S.A.
11, Karitsi Square
GR-10561 Athen
Phone +30 10 322 1737
Fax +30 10 322 5708
assimac@interagora.gr
www.assimacopoulos.gr

Hungary
ebm-papst Industries Kft.
Ezred u. 2.
H-1044 Budapest
Phone +36 1 8722-190
Fax +36 1 8722-194
office@hu.ebmpapst.com

Compex KFT.
Elete út 56/B
H-1115 Budapest
Phone +36 12 0657 25
Fax +36 12 0657 71
compex@vnet.hu

Iceland
RJ Engineers
Stangarhyl 1a
IS-110 Reykjavik
Phone +354 567 8030
Fax +354 567 8015
rj@rj.is
www.rj.is

Ireland
ebm-papst UK Ltd.
Chelmsford Business Park
GB-Chelmsford Essex CM2 5EZ
Phone +44 1245 468555
Fax +44 1245 466336
sales@uk.ebmpapst.com
www.ebmpapst.co.uk

AuBren Limited
Portlaoise Business & Technology Park
Mountrath Road
IRL-Portlaoise, Co. Laois
Phone +353 57 8664343
Fax +353 57 8664346
sales@ie.aubren.com
www.aubren.com

Italy
ebm-papst Srl
Via Cornaggia 108
I-22076 Mozzate (Co)
Phone +39 0331 836201
Fax +39 0331 821510
info@it.ebmpapst.com
www.ebmpapst.it

Macedonia
ebm-papst Industries Kft.
Ezred u. 2.
H-1044 Budapest
Phone +36 1 8722-190
Fax +36 1 8722-194
office@hu.ebmpapst.com

Netherlands
ebm-papst Benelux B.V.
Engelseweg 127
NL-5705 AC Helmond
Phone +31 492 502-900
Fax +31 492 502-950
verkoop@nl.ebmpapst.com
www.ebmpapst.nl

Avnet Time Breda
Takkebijsters 2
NL-4817 BL Breda
Phone +31 765 722300
Fax +31 765 722303
Time NL@avnet.com
www.avnettime.com

Norway
ebm-papst AS
P.B. 173 Holmlia
N-1203 Oslo
Phone +47 22 763340
Fax +47 22 619173
mailbox@ebmpapst.no
www.ebmpapst.no

Poland
ebm-papst Polska Sp. z o.o.
ul. Annopol 4A
PL-03236 Warszawa
Phone +48 22 6757819
Fax +48 22 6769587
office@ebmpapst.pl
www.ebmpapst.pl

Compex Ges.m.b.H
Wurlitzergasse 10/3
A -1160 Wien
Phone +43 1 4804223
Fax +43 1 4864230
compex.wien@utanet.at

ebm-papst in Europe

Portugal
ebm-papst (Portugal), Lda.
Centro Empresarial de Alverca
Rua de Adarse, Vale D'Ervas
Corpo D / Fracção 3
P-2615-178 Alverca do Ribatejo
Phone +351 218 394 880
Fax +351 218 394 759
info@pt.ebmpapst.com
www.ebmpapst.pt

Romania
ebm-papst Romania S.R.L.
Str. Tarnavei Nr. 20
RO-500327 Brasov
Phone +40 268 312-805
Fax +40 268 312-805
dudasludovic@xnet.ro

Compex Ges.m.b.H
Wurlitzergasse 10/3
A -1160 Wien
Phone +43 1 4804223
Fax +43 1 4864230
compex.wien@utanet.at

Russia
ebm-papst Ural GmbH
Posadskaja-Strasse, 23(E), 3
RU-620102 Ekaterinburg
Phone +7 343 2338000
Fax +7 343 2337788
Konstantin.Molokov@ru.ebmpapst.com
www.ebmpapst.ur.ru

ebm-papst Rus GmbH
proezd 4529, vladenie 5, stroenie 1
RU-141000 Mytistschi, Oblast Moskau
Phone +7 495 9807524
Fax +7 495 5140924
info@ebmpapst.ru
www.ebmpapst.ru

Serbia & Montenegro
ebm-papst Industries Kft.
Ezred u. 2.
H-1044 Budapest
Phone +36 1 8722-190
Fax +36 1 8722-194
office@hu.ebmpapst.com

Spain
ebm-papst Ibérica S.L.
Avda. del Sistema Solar, 29
E-28830 San Fernando de Henares (Madrid)
Phone +34 91 6780894
Fax +34 91 6781530
ventas@ebmpapst.es

Sweden
ebm-papst AB
Äggelundavägen 2
S-17562 Järfälla
Phone +46 8 7619400
Fax +46 8 362306
info@ebmpapst.se
www.ebmpapst.se

Switzerland
ebm-papst AG
Rütisbergstrasse 1
CH-8156 Oberhasli
Phone +41 44 73220-70
Fax +41 44 73220-77
verkauf@ebmpapst.ch
www.ebmpapst.ch

Omni Ray AG
Im Schörli 5
CH-8600 Dübendorf
Phone +41 44 802 2880
Fax +41 44 802 2828
r.borner@omniray.ch
www.omniray.ch

Turkey
Akantel Elektronik San. Tic. LTD. Sti.
Atatürk Organize Sanayi
Bölgesi 10007 SK. No.:6
TR-35620 Cigli-Izmir
Phone +90 232 3282090
Fax +90 232 3280270
akantel@akantel.com.tr
www.ebmpapst.com.tr

Ukraine
ebm-papst Ukraine LLC
Lepse Boulevard, 4, Building 47
UA-03067 Kiev
Phone +38 044 2063091
Fax +38 044 2063091
mail@ebmpapst.ua
www.ebmpapst.ua

United Kingdom
ebm-papst UK Ltd.
Chelmsford Business Park
GB-Chelmsford Essex CM2 5EZ
Phone +44 1245 468555
Fax +44 1245 466336
sales@uk.ebmpapst.com
www.ebmpapst.co.uk

ebm-papst Automotive & Drives (UK) Ltd.
The Smithy
Fidlers Lane
GB-East Ilsley, Berkshire RG20 7LG
Phone +44 1635 2811-11
Fax +44 1635 2811-61
A&Dsales@uk.ebmpapst.com
www.ebmpapst-ad.com

fan agent
compact fan agent
motor specialist
motor agent

ebm-papst in America, Africa and Asia

America

Argentina
ebm-papst de Argentina S.A.
Hernandarias 148 Lomas del Mirador
Pcia. de Buenos Aires (1752)
Phone +54 11 46576135
Fax +54 11 46572092
ventas@ar.ebmpapst.com
www.ebmpapst.com.ar

Brasil
ebm-papst Motores Ventiladores Ltda.
Av. José Giorgi, 301 Galpões B6+B7
Condominio Logical Center
BR-06707-100 Cotia - São Paulo
Phone +55 11 4613-8700
Fax +55 11 3164-8924
vendas@br.ebmpapst.com
www.ebmpapst.com.br

Canada
ebm-papst Canada Inc.
1800 Ironstone Manor, Unit 2
CDN-Pickering, Ontario, L1W3J9
Phone +1 905 420-3533
Fax +1 905 420-3772
sales@ca.ebmpapst.com
www.ebmpapst.ca

Mexico
ebm Industrial S.de R.L. de C.V.
Paseo de Tamarindos 400-A-5to Piso
Col. Bosques de las Lomas
MEX-Mexico 05120, D.F.
Phone +52 55 3300-5144
Fax +52 55 3300-5243
sales@mx.ebmpapst.com
www.ebmpapst.com.mx

USA
ebm-papst Inc.
P.O. Box 4009
100 Hyde Road
USA-Farmington, CT 06034
Phone +1 860 674-1515
Fax +1 860 674-8536
sales@us.ebmpapst.com
www.ebmpapst.us

ebm-papst Automotive & Drives, Inc.
3200 Greenfield, Suite 255
USA-Dearborn, MI 48120
Phone +1 313 406-8080
Fax +1 313 406-8081
automotive@us.ebmpapst.com
www.ebmpapst-automotive.us

Africa

South Africa
ebm-papst South Africa (Pty) Ltd.
P.O. Box 3124
1119 Yacht Avenue
ZA-2040 Honeydew
Phone +27 11 794-3434
Fax +27 11 794-5020
info@za.ebmpapst.com
www.ebmpapst.co.za

Retron CC
P.O. Box 3 94 48, Bramley, 2018
SSF-Building, 706 - 4th Street, Wynberg
ZA-Johannesburg
Phone +27 11 7860553
Fax +27 11 4408275

Asia

China
ebm-papst Ventilator (Shanghai) Co., Ltd.
No. 418, Huajing Road
WaiGaoQiao Free Trade Zone
No. 2001, Yang Gao (N) Road
VRC-200131 Shanghai, P.R. of China
Phone +86 21 5046-0183
Fax +86 21 5046-1119
sales@cn.ebmpapst.com
www.ebmpapst.com.cn

Hong Kong
ebm-papst Hong Kong Ltd.
Unit No. 13,9 / F
Technology Park, 18 On Lai Street
Siu Lek Yuen, Shatin N.T.
Hong Kong - P.R. of China
Phone +852 2145-8678
Fax +852 2145-7678
info@hk.ebmpapst.com

India
ebm-papst India Pvt. Ltd.
26/3, G.N.T. Road, Erukkencherry
IND-Chennai-600118
Phone +91 44 25372556
Fax +91 44 25371149
sales@in.ebmpapst.com
www.ebmpapst.in

Indonesia
ebm-papst Indonesia
Representative Office
German Centre, 4th Floor, Suite 4470
Jl. Kapt. Subijono Dj. Bumi Serpong Damai
RI-15321 Tangerang
Phone +62 21 5376250
Fax +62 21 5388305
salesdept@id.ebmpapst.com

Israel
Polak Bros. Import Agencies Ltd.
9 Hamefalsim Street
IL-Kiryat Arie, Petach-Tikva 49514
Phone +972 3 9100300
Fax +972 3 5796679
polak@polak.co.il
www.polak.co.il

ebm-papst in Asia and Australia

Japan
ebm-papst Industries Japan K.K.
12 Floor, Benex S-3 Bldg.
3-20-8 Shinyokohama, Kohoku-ku
J-222-0033 Yokohama
Phone +81 45 47057-51
Fax +81 45 47057-52
info@jp.ebmpapst.com
www.ebmpapst.jp

Korea
ebm-papst Korea Co. Ltd.
6F, Trutec Bldg.
B 6-2, Digital Media City (DMC)
Sangam-Dong, Mapo-Gu
ROK-Seoul 121-270
Phone +82 2 366213-24
Fax +82 2 366213-26
info@kr.ebmpapst.com
www.ebmpapst.co.kr

Malaysia
ebm-papst Malaysia
Representative Office
Unit 12-2, Jalan USJ Sentral 3
Persiaran Subang, Selangor Darul Ehsan
MAL-47600 Subang Jaya
Phone +60 3 8024-1680
Fax +60 3 8024-8718
salesdept@my.ebmpapst.com

Singapore
ebm-papst SEA Pte. Ltd.
No. 23 Ubi Road 4
#06-00 Olympia Industrial Building
SGP-Singapore 408620
Phone +65 65513789
Fax +65 68428439
salesdept@sg.ebmpapst.com

Taiwan
ETECO Engineering & Trading Corp.
10F-I, No. 92, Teh-Wei Str.
RC-Tsow-Inn District, Kaohsiung
Phone +886 7 557-4268
Fax +886 7 557-2788
eteco@ms22.hinet.net
www.ebmpapst.com.tw

Thailand
ebm-papst Thailand Co., Ltd.
99/349 Na-Nakorn Bldg., 4th Floor
Chaeng Wattana Road, Thungsonghong,
THA-10210 Laksi, BKK
Phone +66 2 57615-24
Fax +66 2 57615-42
salesdept@th.ebmpapst.com

United Arab Emirates
ebm-papst Middle East FZE
PO Box 17755
Jebel Ali Free Zone / FZS1 / AP05
UAE-Dubai
Phone +971 4 88608-26
Fax +971 4 88608-27
info@ae.ebmpapst.com
www.ebmpapst.ae

Vietnam
ebm-papst Vietnam
Representative Office
Room #102, 25 Nguyen Van Thu Street
District 1
VN-Ho Chi Minh City
Phone +84 8 39104099
Fax +84 8 39103970
linh.nguyen@vn.ebmpapst.com

Australia

Australia
ebm-papst A&NZ Pty Ltd.
10 Oxford Road
AUS-Laverton North, Victoria, 3026
Phone +61 3 9360-6400
Fax +61 3 9360-6464
sales@ebmpapst.com.au
www.ebmpapst.com.au

New Zealand
ebm-papst A&NZ Pty Ltd.
102 Henderson Valley Road
NZ-Henderson, Auckland 1230
Phone +64 9 837-1884
Fax +64 9 837-1899
sales@ebmpapst.com.au
www.ebmpapst.com.au

37634-7-8811 · RA-12/10-10'
L1136 · 980 0000 047
Printed in Germany

ebm-papst
St. Georgen GmbH & Co. KG

Hermann-Papst-Straße 1
D-78112 St. Georgen
Phone +49 7724 81-0
Fax +49 7724 81-1309
info2@de.ebmpapst.com

ebm-papst
Mulfingen GmbH & Co. KG

Bachmühle 2
D-74673 Mulfingen
Phone +49 7938 81-0
Fax +49 7938 81-110
info1@de.ebmpapst.com

ebm-papst
Landshut GmbH

Hofmark-Aich-Straße 25
D-84030 Landshut
Phone +49 871 707-0
Fax +49 871 707-465
info3@de.ebmpapst.com

www.ebmpapst.com

ebmpapst