New!

A02ES-I series

Emergency stop switches

Distinctive features and specifications



- ❑ **Approved to EN 60947-5-5, UL 508 and CSA**
- ❑ **Industrial range**
- ❑ **Pull or twist to release**
- ❑ **AC-12, 6A 240VAC / DC-12, 8A 24VAC**
- ❑ **Panel sealed to IP65**
- ❑ **Illuminated model**

ELECTRICAL SPECIFICATIONS

- Electrical function : push to shutt off, pull or twist to release
- Current/voltage rating : AC-12, 10A 24VAC / 6A 240VAC
  DC-12, 8A 24VDC
  AC-15, 10A 24VAC / 3A 240VAC
  DC-13, 4A 24VDC
- Electrical life : 100.000 cycles with one contact block
- Insulation resistance : 50 MΩ min.
- Dielectric stength : contact block 2.500 Vrms

ENVIRONMENTAL SPECIFICATIONS

- Front panel sealing : IP65

PANEL CUT-OUT

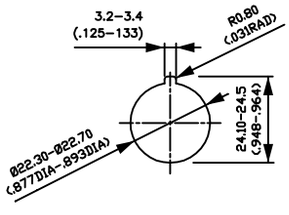

GENERAL SPECIFICATIONS

- Panel thickness : 6 mm (.236) max.
- Low level or mechanical life :
  250.000 cycles w. one contact block
- Operating temperature
  -20°C to +55°C
- Switch terminals : M3.5 screws

AGENCY APPROVALS

UL 508 CSA 22.2 No 14 EN 60947-5-5

MOUNTING LOCKING SYSTEM

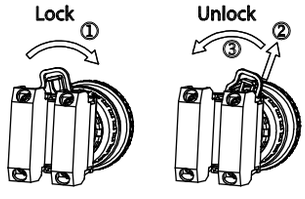

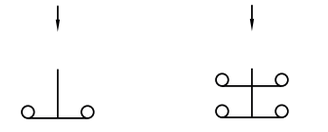

Mounting accessories : Standard hardware supplied : 1 nut and 1 flat panel seal

Packaging unit : box of 5 pieces

The company reserves the right to change specifications without notice - Not for sale in JAPAN.

A02ES-I series

New!

Emergency stop switches

Panel cut-out Ø 22 (.866)

Single pole - Normally closed



A02ESI3B101IX0

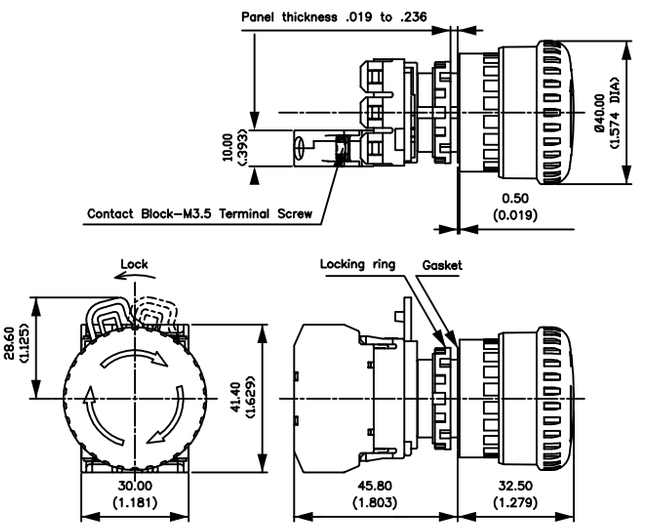

Double pole - Normally closed



A02ESI3B102IX0

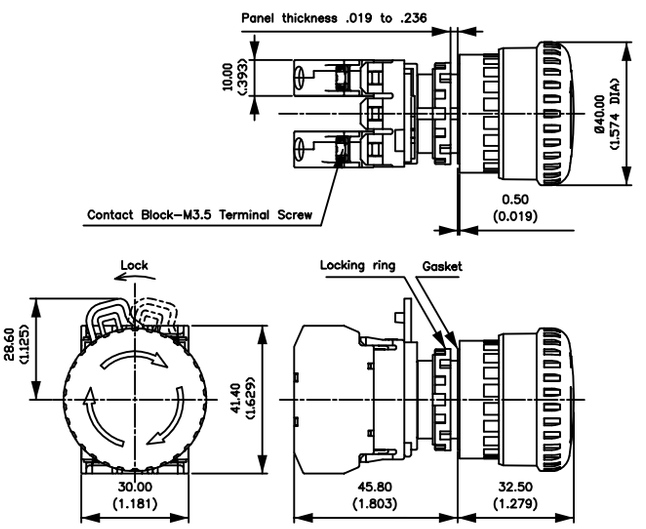

Single pole - Normally closed - illuminated



With LED 24V

A02ESI4B101IR2

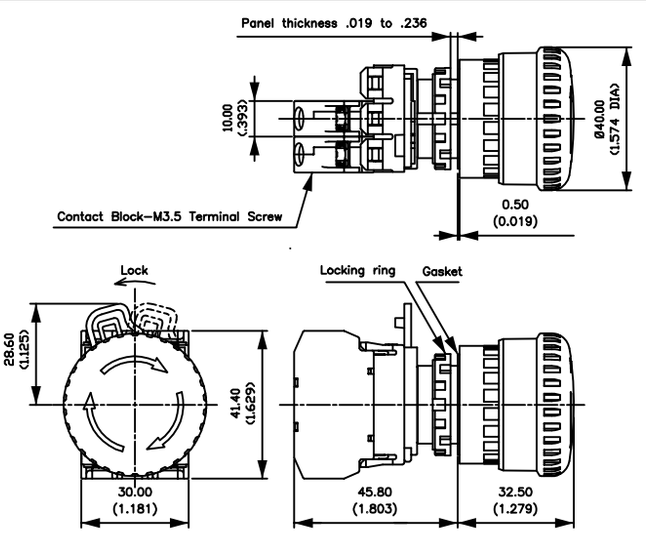

Ø 60 mm name plate

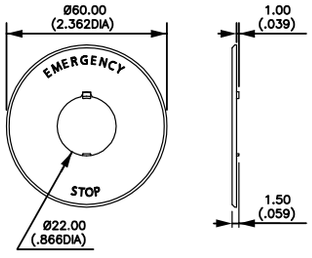

Legend "EMERGENCY STOP" is indicated outside a Ø 44 mm circle.

A02-U27Y

Anti-rotation ring

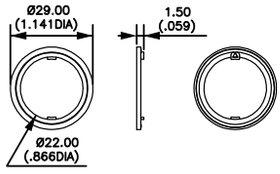

A02-U9ZRL

Locking ring wrench

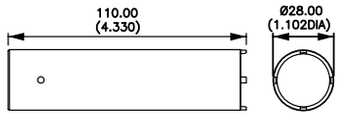

A02-9ZT1