E11902

Hexagon nut

NUT M8 CUZN 100PCS.

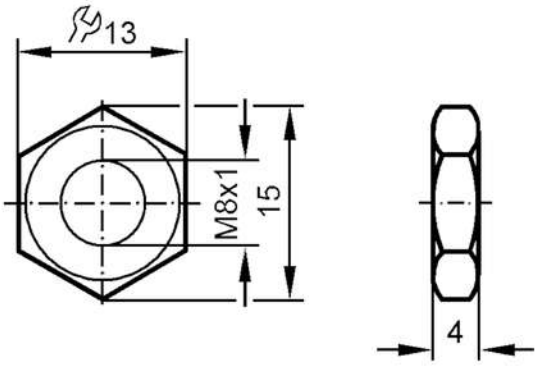

Mechanical data		
Weight	[g]	331.8
Dimensions	[mm]	M8 x 1
Thread designation		M8 x 1
Materials		brass nickel-plated
Remarks		
Pack quantity		100 pcs.