John Guest®

Data Sheet DS-PM04

Equal Straight Connectors

The John Guest range of Equal Straight Connectors are suitable for applications involving foodstuffs, potable liquids, air & inert gases.

See Sheet 2 for Dimensions

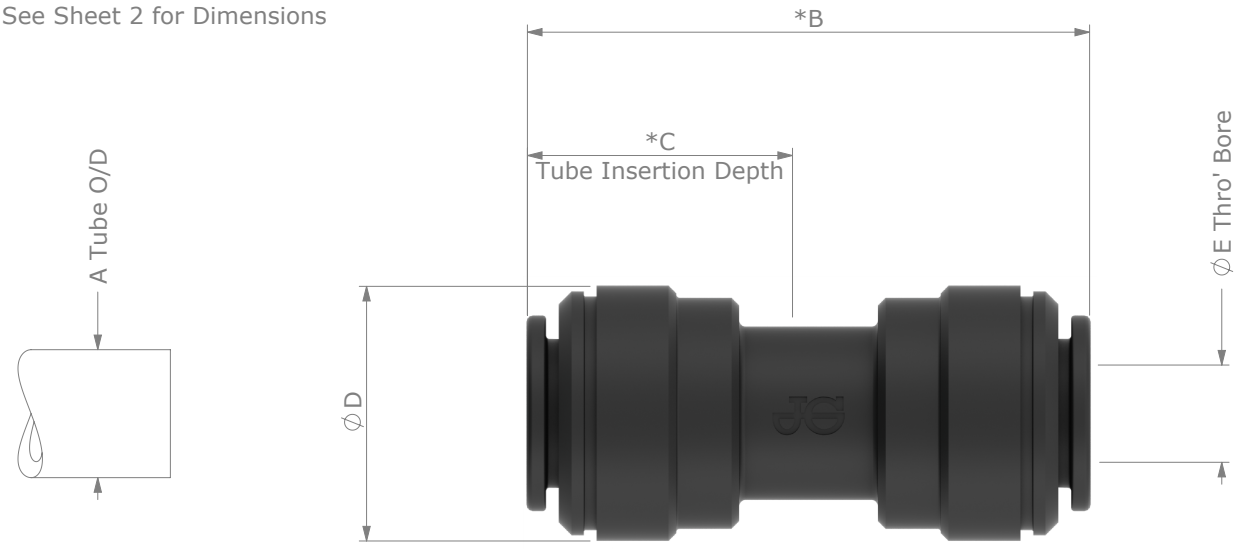

Tube Detail

Profile Type 1

*With Collet(s) in release position

Dimensions in mm

Parts List

Part Description	Material	Part Description	Material
Body	Acetal Copolymer (Unfilled), Black	O' Rings	Nitrile, Black
Collets	Acetal Copolymer (Unfilled), Black & Stainless Steel		

Technical Information

Working Pressures & Temperatures

Potable Liquids & Air	4mm to 8mm	10mm to 22mm
1°C	16bar	10bar
20°C	16bar	10bar
65°C	10bar	7bar
Air		
-20°C	16bar	10bar

Applications

Drinks Dispense	✓
Potable Liquid	✓
Pneumatics	✓

The Copyright in this drawing and the products referred thereon belong to John Guest International Limited and this drawing nor the information contained herein shall be produced in any form or used for any purpose without written consent © 2014

The company has a policy of continuous research and development and reserves the right to amend without notice the specification and design of all products illustrated. For details of Terms and Conditions and any other technical enquiries, please contact our Customer Services Department on 01895 449233. Alternatively, call our Technical Helpdesk on 01895 423333

Location: CCL-SA-PLU01
File: DS-PM04[140829][C].pdf
Release Number: 150803-C-CIFM
CURRENT PRODUCTION
User: roses
Printed/Downloaded: 11 May 15,16:20
UNCONTROLLED IF PRINTED OR DOWNLOADED

John Guest®

Data Sheet DS-PM04

Equal Straight Connectors



Profile Type 2

Product No.	Size	A Tube O/D	B	C	D	E	Profile Type
PM0404E	4mm	4.00+0.05 / -0.07	32.6	14.3	13.0	2.5	2
PM0405E	5mm	5.00+0.05 / -0.07	32.6	14.3	13.0	3.4	2
PM0406E	6mm	6.00+0.05 / -0.10	35.0	15.7	15.0	4.8	2
PM0408E	8mm	8.00+0.05 / -0.10	38.0	16.7	17.8	6.3	2
PM0410E	10mm	10.00+0.05 / -0.10	41.9	19.7	19.9	7.6	2
PM0412E	12mm	12.00+0.05 / -0.10	53.8	25.9	23.0	8.6	1
PM0415E	15mm	15.00+0.05 / -0.10	58.0	27.7	27.0	12.0	1
PM0418E	18mm	18.00+0.05 / -0.10	64.1	31.0	31.1	16.0	1
PM0422E	22mm	22.00+0.05 / -0.10	70.6	34.3	35.5	19.2	1

The Copyright in this drawing and the products referred thereon belong to John Guest International Limited and this drawing nor the information contained herein shall be produced in any form or used for any purpose without written consent © 2014

The company has a policy of continuous research and development and reserves the right to amend without notice the specification and design of all products illustrated. For details of Terms and Conditions and any other technical enquiries, please contact our Customer Services Department on 01895 449233. Alternatively, call our Technical Helpdesk on 01895 423333