Level and Pressure

Product Information

Conductive level detection

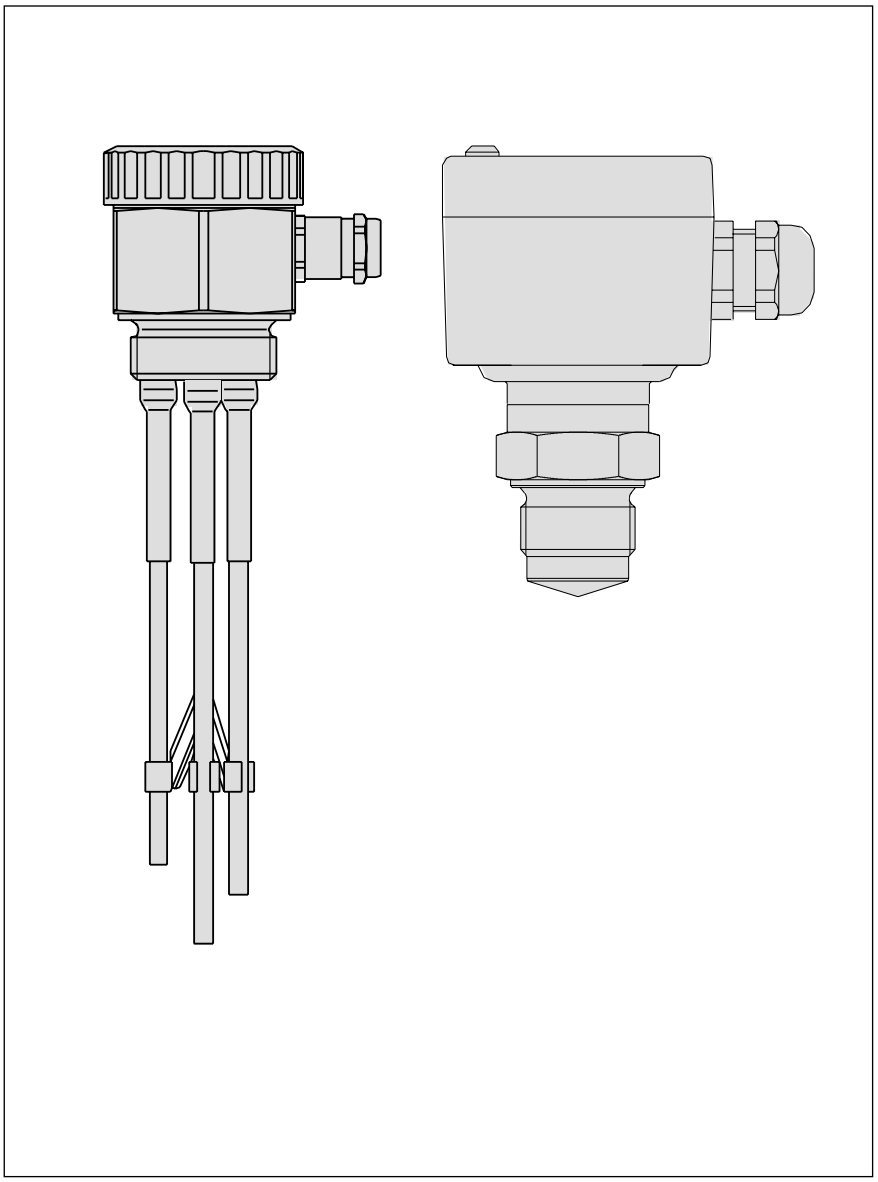

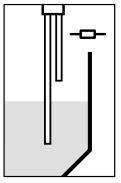

Contents

1 Product description

1.1 Application ... 3
1.2 Function ... 5
1.3 Types/Versions ... 6
1.4 Application examples ... 8
1.5 Adjustment ... 9

2 Technical data and dimensions

2.1 Conductive electrodes type EL ... 11
2.2 VEGATOR 256C signal conditioning instrument ... 15
2.3 VEGATOR 532 Ex signal conditioning instrument ... 16
2.4 VEGATOR 631 Ex signal conditioning instrument ... 19
2.5 VEGAKON 61 and VEGAKON 63 compact instrument ... 21
2.6 VEGAKON 66 compact instrument ... 23
2.7 Approvals ... 26

3 Mounting and installation instructions ... 27

4 Electrical connection

4.1 VEGATOR 256C ... 28
4.2 VEGATOR 532 Ex ... 28
4.3 VEGATOR 631 Ex ... 30
4.4 VEGAKON 61/63 and VEGAKON 66 ... 32

1 Product description

1.1 Application

Conductive electrodes

With 1 … 5 probes in rod or cable version

- one electrode can detect up to 5 different levels

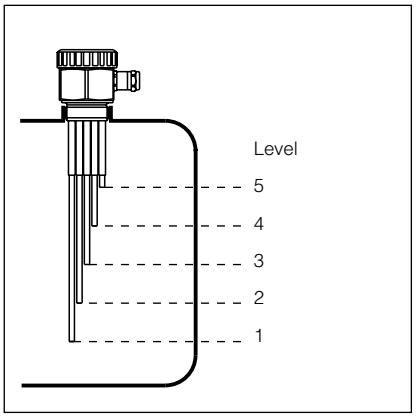

Fig. 1.1 Conductive electrodes with 5 probes

- approved for hazardous areas
- certified acc. to CENELEC
- approved as overfill protection acc. to WHG
- suitable housing versions in different materials
- rod electrodes up to 4 m length
- cable electrodes up to 30 m length

suitable for

- product temperatures up to 130°C
- operating pressure up to 63 bar
- protection IP 66/IP 67

Signal conditioning instruments

as surface or 19" module units

- instrument for surface mounting with plug-in socket for carrier rail mounting
- module unit with only 5 TE width
- overfill protection or dry run protection (A/B) selectable
- universal long-range power supply unit for AC and DC
- potential separation between all circuits
- relay with parallel transistor outputs
- automatic measuring cable compensation (line length up to 1000 m)
- automatic suppression of DC voltage fields in the measured product
- monitoring on line break
- fault monitoring

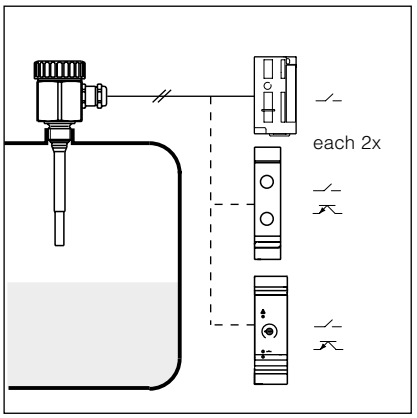

Fig. 1.2 Measuring system with electrodes and signal conditioning instruments

VEGAKON 61/63 compact instruments

Complete with annular electrode, plastic housing and integral oscillator with relay or transistor output, visible signal lamp for indication of switching condition

- annular electrode with neutralization electrode for automatic elimination of interfering build-up
- detection of conductivity for automatic adjustment of the switch point sensitivity (no adjustment necessary)

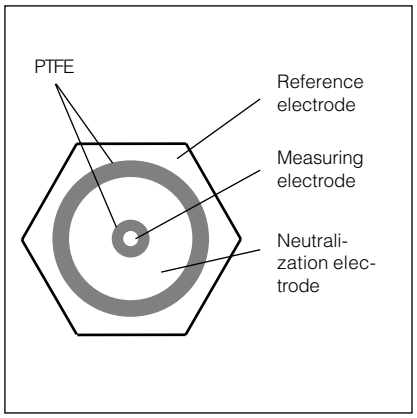

Fig. 1.3 Annular electrode

- flush installation in tanks and pipes possible, no reduction of the flow cross section
- version with tube extension up to 4000 mm
- mounting with locking screw for variable switch point adjustment
- transistor output, overload resistant and short-circuit proof
- depending on connection PNP or NPN action

suitable for

- product temperatures up to +150°C (with temperature adapter)
- operating pressure up to 25 bar
- protection IP 66

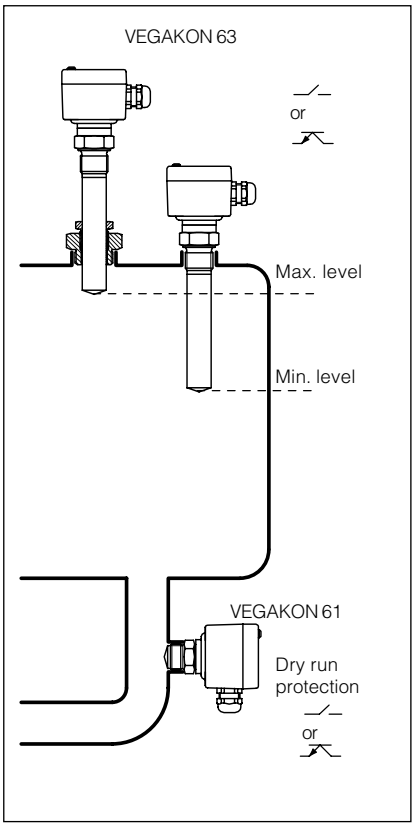

Fig. 1.4 Measuring system with compact instruments

VEGAKON 66 compact instrument

Conductive level switch for level detection or pump control in conductive liquids. Housing made of plastic protection IP 66 or Aluminium, plastic-coated protection IP 66/IP 67. Oscillator integrated in the housing, thread G $1^1/_2$ A of PP and rod electrodes.

- selectable sensitivity - for adaptation to the conductivity of the medium
- A/B-mode
- adjustable integration time
- interchangeable oscillators
- up to 3 electrode rods

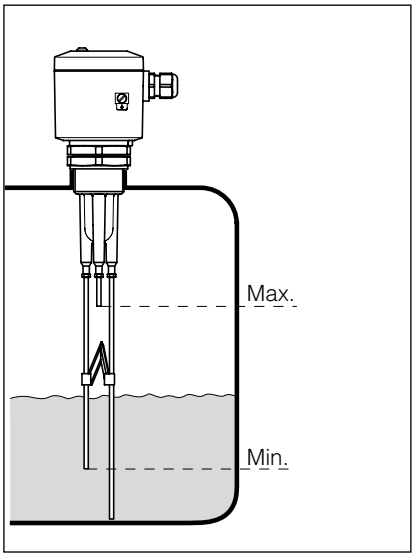

Fig. 1.5 VEGAKON 66

1.2 Function

Conductive electrodes detect the level resistance when their electrode(s) is covered by the product. A low alternating current begins to flow (no electrolysis) and is measured on amplitude and phase position by the signal conditioning instrument or compact instrument and processed into a switching signal.

The switching signal is determined by the length and mounting position of the appropriate electrodes.

The basic concept of a conductive electrode consists of a ground electrode and a level-sensitive measuring electrode.

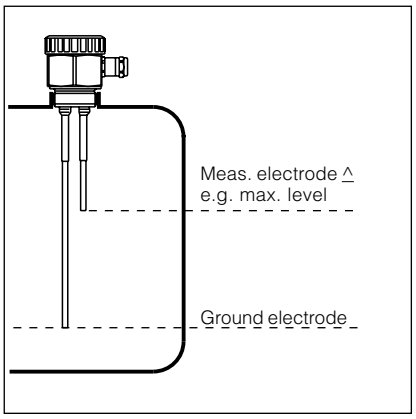

Fig. 1.6 Electrode in non-conductive vessel

In conductive vessels, the vessel wall forms the ground electrode. In this case, the conductive electrode consists of one probe.

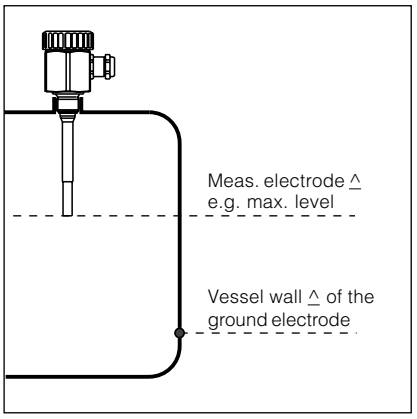

Fig. 1.7 Electrode in conductive vessel

1.3 Types/Versions

Conductive measuring systems are available in two versions:
- measuring system consisting of conductive electrodes and VEGATOR ... signal conditioning instrument
- measuring system in the form of the VEGAKON compact instrument

VEGATOR 256C and electrode

Application:	single point control/level detection
Series:	module unit
Power supply:	200 ... 250 V AC, 50/60 Hz 24 V, 42 V, 48 V, 110 V ... 130 V AC
Input:	1 channel for electrode with 1 ... 3 probes
Output:	1 relay (spdt)
Mode:	overfill protection (A)

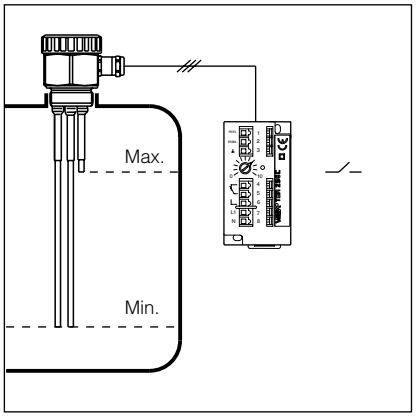

Fig. 1.8 Electrode with VEGATOR 256C

VEGATOR 532 Ex and electrode

Application:	2 x level detection or 2 x pump control (Min/Max)
Series:	19" module card, width 5 TE
Power supply:	20 ... 53 V AC and 20 ... 72 V DC
Inputs:	2 channels for electrode with 1 ... 5 probes
Outputs:	2 relays (1 spdt each) 2 transistors
Classification:	[EEx ia] IIC
Approvals:	CENELEC WHG applied for
Mode:	overfill (A) or dry run protection (B) selectable
Line compensation:	suppression of the line capacitance by phase-selective processing of the measuring current
Fault monitoring:	detection of an interruption in the measuring cable triggers a fault signal

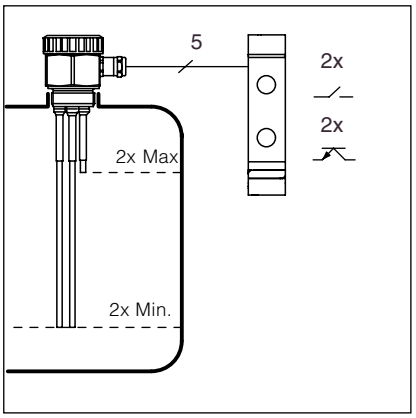

Fig. 1.9 Electrode with VEGATOR 532 Ex

VEGATOR 631 Ex and electrode

Application:	1 x level detection or 1 x pump control (Min/Max)
Series:	module unit
Power supply:	20 ... 250 V AC and 20 ... 72 V DC
Input:	1 channel for electrode with 1 ... 3 probes
Output:	1 relay (spdt) 1 transistor
Classification:	[EEx ia] IIC
Approvals:	CENELEC WHG applied for
Mode:	overfill (A) or dry run protection (B) selectable
Line compensation:	suppression of the line capacitance by phase-selective processing of the measuring current
Fault monitoring:	detection of an interruption in the measuring cable triggers a fault signal
Integration time:	adjustable up to 20 sec

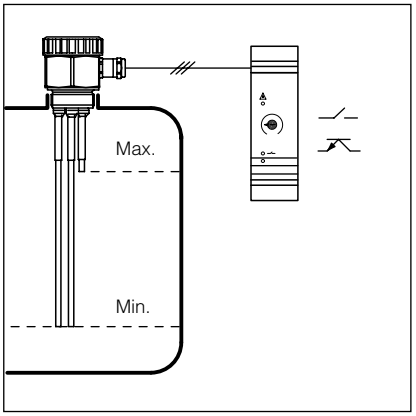

Fig. 1.10 Electrode with VEGATOR 631 Ex

VEGAKON 61 compact instrument

Application:	single point control/level detection
Series:	compact instrument with socket G 1 A or cone DN 25 with compression nut
Power supply:	with relay module: 20 … 250 V AC, 50/60 Hz, 20 … 72 V DC with transistor module: 10 … 55 V DC
Output:	Module system - relay module with one spdt or - transistor module (PNP/NPN can be wired)
Mode:	overfill (A) or dry run protection (B) selectable

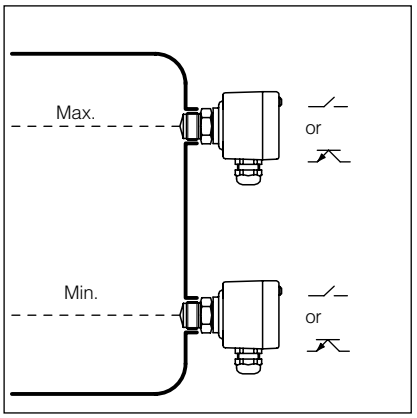

Fig. 1.11 VEGAKON 61

VEGAKON 63 compact instrument

like VEGAKON 61, but with extension tube between socket or cone DN 25 with compression nut and annular electrode.

Extension tube:	70 … 4000 mm with socket 60 … 4000 mm with cone DN 25

Optional locking G $1^{1}/_{2}$ A is available for height adjustment.

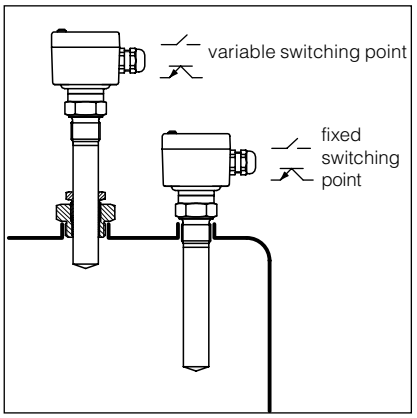

Fig. 1.12 VEGAKON 63

Note:
In very adhesive products, VEGAKON 61 should not be mounted flush to the side walls or the vessel bottom due to the likelihood that it will remain covered by a thick product layer even in an emptied vessel. In such case, the use of a short VEGAKON 63 (e.g. 100 mm length) is recommended so that the electrode protrudes out of the residual product layer.

VEGAKON 66 compact instrument

Application:	single point control or pump control (double point control)
Series:	compact instrument with socket G 1½ A
Power supply:	- with relay module: 20 … 250 V AC, 50/60 Hz, 20 … 72 V DC - with transistor module: 10 … 55 V DC
Output:	Module system - relay module (floating) with two spdt (DPDT) or - transistor module (PNP/NPN can be wired)
Mode:	overfill (A) or dry run protection (B) selectable
Integration time:	adjustable up to 20 sec

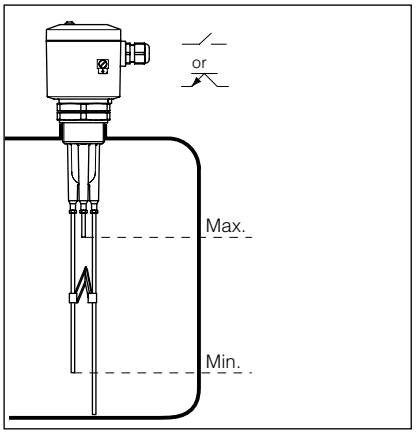

Fig. 1.13 VEGAKON 66

1.4 Application examples

Level detection (single point control)

Measuring system for detection of the max. level in an electrically non-conductive vessel, e.g. overfill protection.

- conductive probe with one electrode corresponding in its length to the max. level
- signal conditioning instrument
  VEGATOR 256C (not for certified overfill protection)
  VEGATOR 532 Ex (mode A) or
  VEGATOR 631 Ex (mode A)

- VEGAKON 61/63
- VEGAKON 66

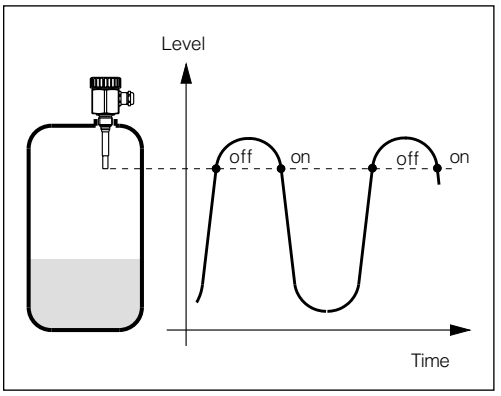

Fig. 1.14 Single point control

Pump control (double point control)

Measuring system for detection of two levels (alternating function) in an electrically non-conductive vessel, e.g. pump control.

- conductive probe with three electrodes corresponding in their lengths to the high and low level
- signal conditioning instrument
  VEGATOR 256C
  VEGATOR 532 Ex
  VEGATOR 631 Ex

- VEGAKON 66

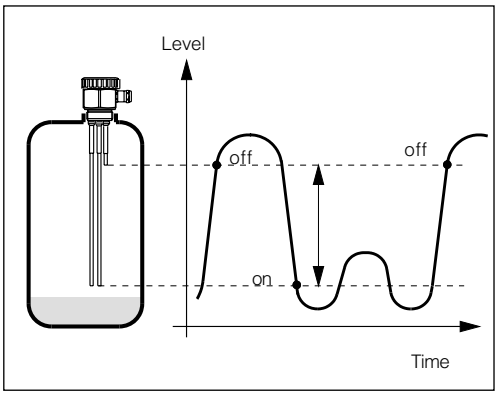

Fig. 1.15 Double point control

Twofold single point control

Measuring system for detection of the min. and max. level in an electrically non-conductive vessel.

- conductive probe with three electrodes corresponding in their lengths to the min. and max. levels
- VEGATOR 532 Ex signal conditioning instrument (channel 1 max. level, mode A; channel 2 min. level, mode B)

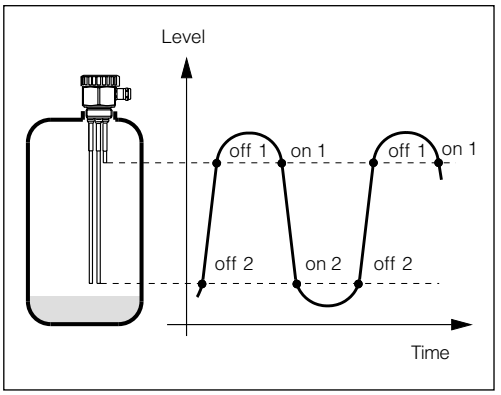

Fig. 1.16 Twofold single point control

or

Measuring system for detection of one level in each of two different electrically conductive vessels.

- two conductive probes, each with one electrode corresponding in its length to the levels in the two vessels
- VEGATOR 532 Ex signal conditioning instrument

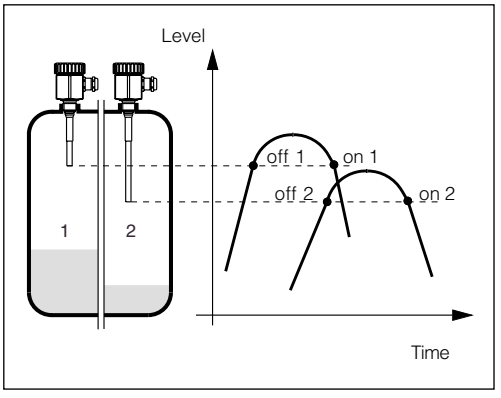

Fig. 1.17 Twofold single point control with two vessels

Compact instruments

Measuring system with compact instruments for level detection

VEGAKON 61
- Max. level:
  Compact instrument mounted laterally into the vessel top
- Min. level:
  Compact instrument mounted into an outlet pipe

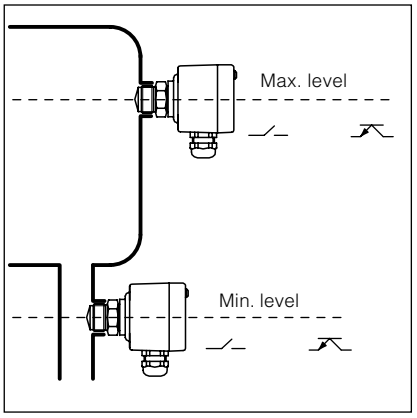

Fig. 1.18 VEGAKON 61

VEGAKON 63
- High level, variable switching point:
  Compact instrument mounted into the vessel top, adjustable with screw connection
- Lower level, fixed switching point:
  Compact instrument mounted into the vessel top
- Buildup, adhesions, fixed switch point:
  Compact instrument with short socket extension, horizontally mounted

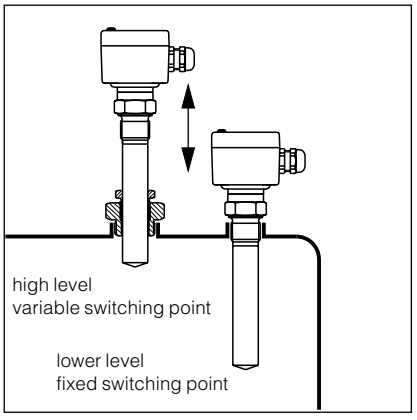

Fig. 1.19 VEGAKON 63

VEGAKON 66
- Mounted from top
  with one rod:
  For level detection in metal vessels. The earth rod can be replaced by the earth connection to the vessel.
  with two rods:
  for level detection (min. or max.)
  with three rods:
  for pump control/double point control

- laterally mounted with two rods for level detection

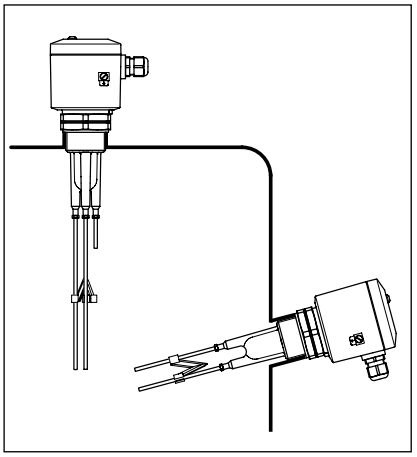

Fig. 1.20 VEGAKON 66

1.5 Adjustment

VEGATOR 256C

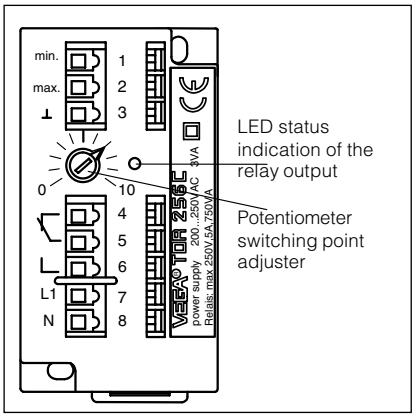

Fig. 1.21 Adjustment VEGATOR 256C

The signal conditioning instrument is constructed as a single channel version and is equipped with the following indicating and adjustment elements:

- A potentiometer on the front plate for switching point adjustment.
- A LED on the front plate for status indication of the relay output (LED lights = relay energised, LED extinguished = relay de-energised)

VEGATOR 532 Ex

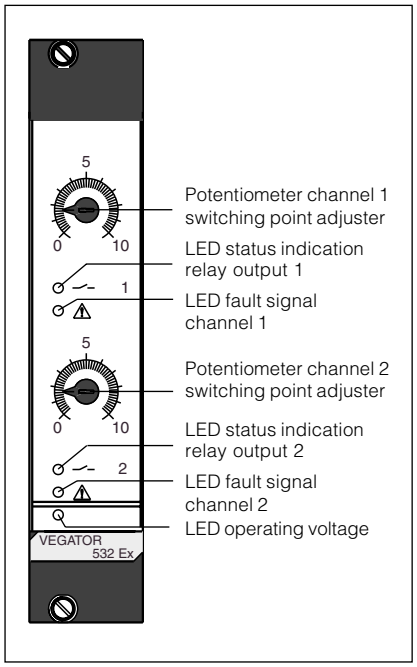

Fig. 1.22 Adjustment VEGATOR 532 Ex

The signal conditioning instrument is constructed as a double channel version and is equipped with the following indicating and adjustment elements:

- Two switches on the circuit board for determination of mode A or B, separately for each channel.
- Two potentiometers on the front plate for switching point adjustment, can be carried out separately for each channel.
- Two LEDs (yellow) for status indication of the relay or transistor outputs 1 and 2 (LED lights = relay energised, transistor conductive, LED extinguished = relay de-energised, transistor blocks).
- Two LEDs (red) for failure indication of channel 1 and 2.
- One LED (green) for indication of the operating voltage.

VEGATOR 631 Ex

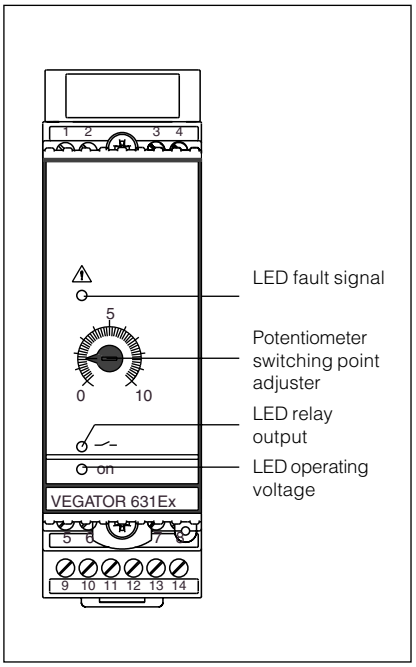

Fig. 1.23 Adjustment VEGATOR 631 Ex

The signal conditioning instrument is constructed as a single channel version and is equipped with the following indicating and adjustment elements:

- One switch laterally on top of the housing for determination of mode A or B.
- Adjustable integration time.
- One potentiometer on the front plate for switching point adjustment.
- One LED (yellow) for status indication of the relay or transistor output (LED lights = relay energised, transistor conductive, LED extinguished = relay de-energised, transistor blocks).
- One LED (red) for failure indication.
- One LED (green) for indication of the operating voltage.

VEGAKON 61, VEGAKON 63

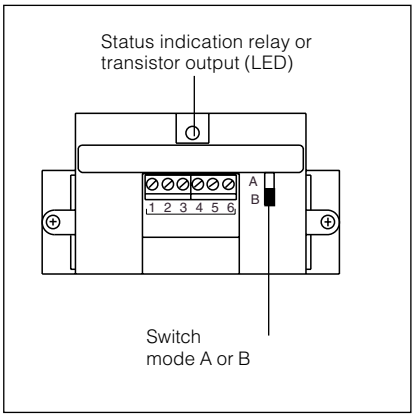

Fig. 1.24 Adjustment VEGAKON 61 and 63

After opening the housing cover, the indicating and adjustment elements are visible.

- One switch for adjustment of mode A or B.
- One LED for status indication of the relay or transistor output (LED lights = relay de-energised, transistor blocks, LED extinguished = relay energised, transistor conductive).

When the housing is closed, the LED is visible through a window in the cover.

VEGAKON 66

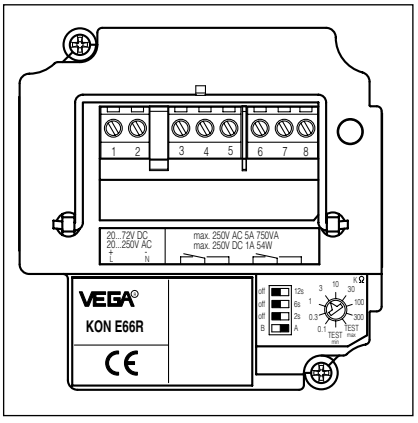

Fig. 1.25 Adjustment VEGAKON 66

2 Technical data and dimensions

2.1 Conductive electrodes type EL

Type EL 1, type EL 1 Ex

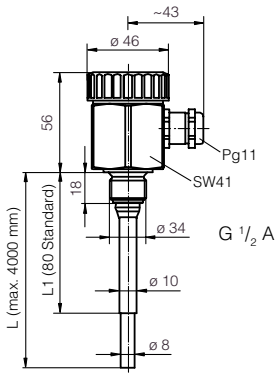

Conductive rod electrode type EL 1 and EL 2

Materials	
- connection housing	1.4571
- thread	1.4571
- welded socket (only with EL 2)	1.4571
- rod electrode	1.4571 or Hastelloy C4
- rod electrode insulation	PTFE
Thread size	G 1/2 A
Length of the rod electrode	
- EL 1	40 … 4000 mm
- EL 2	60 … 2000 mm
Protection	IP 67
Temperature range	-50°C … +130°C
Max. permissible vessel pressure	63 bar
Electrical connection	Pg 11
Basic weight	
- EL 1	approx. 0.4 kg
- EL 2	approx. 0.7 kg
Add. weight of the rod electrode per 100 mm	approx. 0.04 kg

Type EL 2, type EL 2 Ex

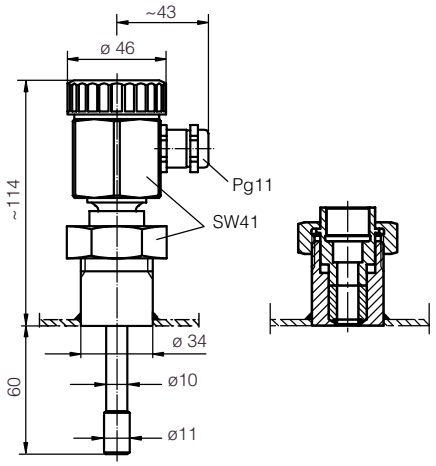

Conductive rod electrode type EL 1 Ex and EL 2 Ex

Temperature range	-20°C … +100°C
Classification	EEx ia IIC T6
Max. permissible ambient temperature	
- temperature class T6	+85°C
- temperature class T5	+100°C
all other technical data like type EL 1 and EL 2	

Type EL 8

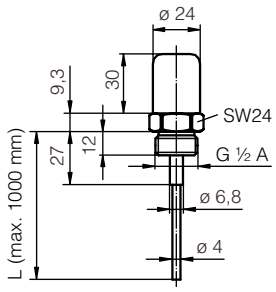

Conductive rod electrode type EL 8

Materials	
- connection housing	plastic
- thread	1.4305
- rod electrode	1.4571
- rod electrode insulation	PE
Thread size	G 1/2 A
Length of the rod electrode	30 … 1000 mm
Protection	IP 50
Temperature range	-10°C … +60°C
Max. permissible vessel pressure	6 bar
Basic weight	approx. 0.1 kg
Add. weight of the rod electrode per 100 mm	approx. 0.04 kg

Type EL 3, type EL 3 Ex

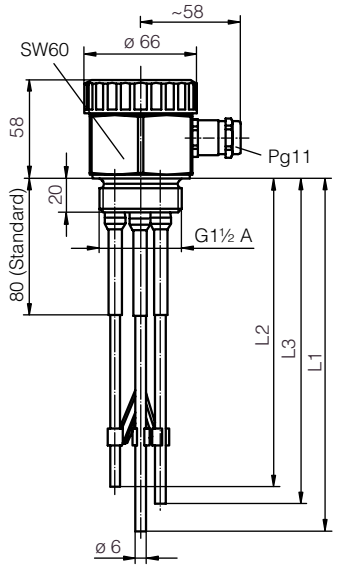

L1 = longest rod electrode
L2 = shortest rod electrode

Conductive multiple rod electrode type EL 3 (2 ... 5 rod electrodes)

Materials	
- connection housing	1.4571
- thread	1.4571
- rod electrodes	1.4571, Hastelloy C4 or Titanium
- rod electrode insulation	PTFE
- distance piece	PP
Thread size	G 1 1/2 A
Length of the rod electrodes	100 ... 4000 mm
Number of rod electrodes	2 ... 5
Protection	IP 67
Temperature range	-50°C ... +130°C
Max. permissible vessel pressure	63 bar
Electrical connection	Pg 16
Basic weight	approx. 0.9 kg
Add. weight of the rod electrodes per 100 mm	approx. 0.04 kg

Conductive multiple rod electrode type EL 3 Ex

Temperature range	-20°C ... +100°C
Classification	EEx ia IIC T6
Max. permissible ambient temperature	
- temperature class T6	+85°C
- temperature class T5	+100°C
all other technical data like type EL 3	

Type EL 4

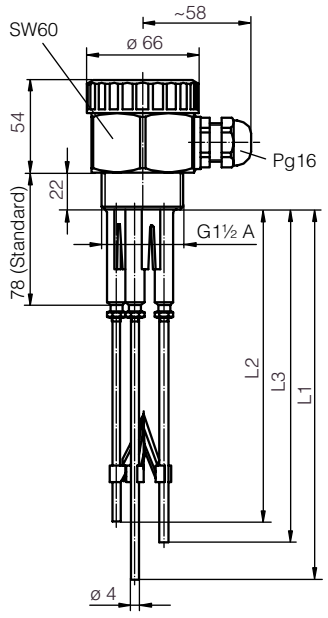

L1 = longest rod electrode
L2 = shortest rod electrode

Conductive multiple rod electrode type EL 4 (2 ... 5 rod electrodes)

Materials	
- connection housing	PP
- thread	PP
- rod electrodes	1.4571, Hastelloy C4 or Titanium
- rod electrode insulation	PP
- distance piece	PP
Thread size	G 1 1/2 A
Length of the rod electrodes	100 ... 4000 mm
Number of rod electrodes	2 ... 5
Protection	IP 67
Temperature range	-20°C ... +100°C
Max. permissible vessel pressure	6 bar
Electrical connection	Pg 16
Basic weight	approx. 0.4 kg
Add. weight of the rod electrodes per 100 mm	approx. 0.04 kg

Conductive cable electrode type EL 9

Materials	
- connection housing	1.4571
- thread	1.4571
- cable electrode	1.4571
- cable electrode insulation	FEP
- gravity weight	1.4571
Thread size	G $^1/_2$ A
Length of the cable electrode	500 … 25000 mm
Protection	IP 67
Temperature range	-50°C … +100°C
Max. permissible vessel pressure	63 bar
Electrical connection	Pg 11
Basic weight	approx. 0.6 kg
Add. weight of the cable electrode per 100 mm	approx. 0.01 kg

Conductive cable electrode type EL 9 Ex

Temperature range	-20°C … +100°C
Classification	EEx ia IIC T6
Max. permissible ambient temperature	
- temperature class T6	+85°C
- temperature class T5	+100°C
all other technical data like type EL 9	

Type EL 9, type EL 9 Ex

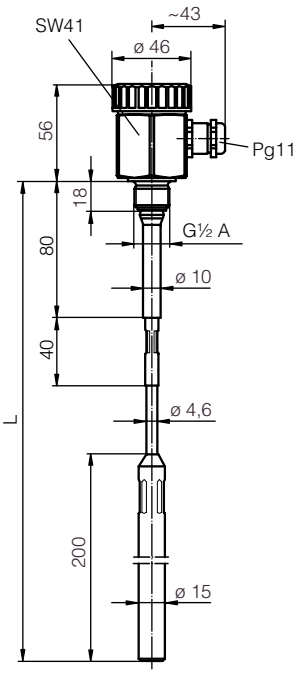

Conductive multiple cable electrodes type EL 5 (2 … 5 cable electrodes)

Materials	
- connection housing	1.4571
- thread	1.4571
- cable electrodes	1.4571
- cable electrode insulation	PTFE/FEP
- gravity weight	1.4571
Thread size	G 1$^1/_2$ A
Length of the cable electrodes	300 … 20000 mm
Number of cable electrodes	2 … 5
Protection	IP 67
Temperature range	-50°C … +100°C
Max. permissible vessel pressure	63 bar
Electrical connection	Pg 16
Basic weight	approx. 1 kg
Add. weight of the cable electrodes per 100 mm	approx. 0.01 kg

Conductive multiple cable electrode EL 5 Ex

Temperature range	-20°C … +100°C
Classification	EEx ia IIC T6
Max. permissible ambient temperature	
- temperature class T6	+85°C
- temperature class T5	+100°C
all other technical data like type EL 5	

Type EL 5, type EL 5 Ex

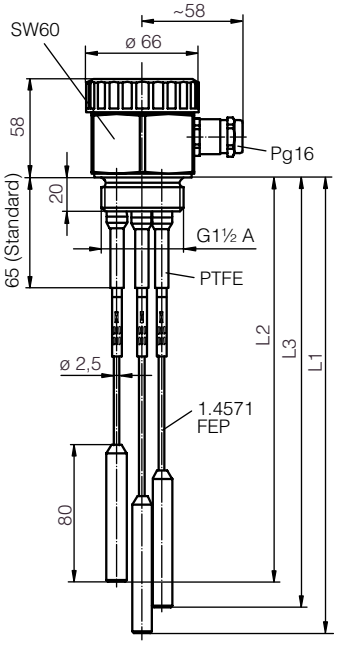

L1 = longest cable electrode
L2 = shortest cable electrode

Type EL 6

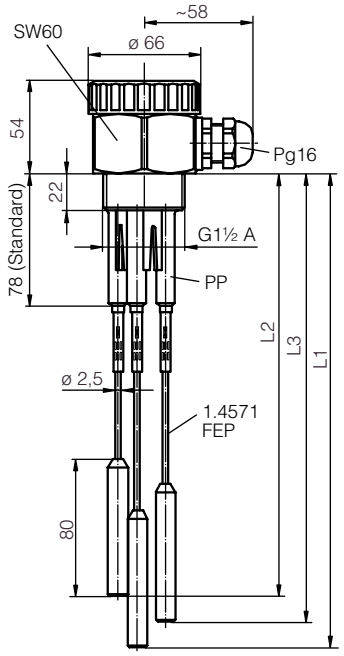

L1 = longest cable electrode
L2 = shortest cable electrode

Conductive multiple cable electrode type EL 6 (2 ... 5 cable electrodes)

Materials	
- connection housing	PP
- thread	PP
- cable electrodes	1.4571
- cable electrode insulation	PP/FEP
- gravity weight	1.4571
Thread size	G $1^1/_2$ A
Length of the cable electrodes	300 ... 20000 mm
Number of cable electrodes	2 ... 5
Protection	IP 67
Temperature range	-20°C ... +100°C
Max. permissible vessel pressure	6 bar
Electrical connection	Pg 16
Basic weight	approx. 0.5 kg
Add. weight of the cable electrodes per 100 mm	approx. 0.01 kg

2.2 VEGATOR 256C signal conditioning instrument

General

Series	module unit
Mounting	2 holes for M3 or carrier rail mounting acc. to EN 50 022
Dimensions	W = 37 mm, H = 69 mm, D = 80 mm
Weight	approx. 160 g

Power supply

Operating voltage	
- standard	200 … 250 V AC, 50/60 Hz
- options	24 V, 42 V, 48 V, 100 … 130 V AC +10 %, –15 %, 50/60 Hz
Power consumption	1 VA

Measuring data input

Number	1
Response resistance	1 … 200 kΩ adjustable
Loop	approx. 12 V_{eff}, max. 1 mA
Switching hysteresis	approx. 20 %

Relay output

Number	1 (1 x level detection or 1 x pump control Min/Max)
Mode	overfill protection (A)
Contact	spdt
Contact material	AgCdO and Au plated
Turn-on voltage	min. 10 mV max. 250 V AC or 250 V DC
Switching current	min. 10 µA max. 5 A AC or 1 A DC
Breaking capacitance	max. 750 VA or 54 W

Integration time

Fixed value	approx. 500 ms

Ambient conditions

Permissible operating temperature	-20°C … +50°C
Storage and transport temperature	-40°C … +70°C

Electrical protective measures

Protection	IP 20
Protection class	II

Electrical connection

Screw terminal	max. 1 x 1.5 mm²

CE conformity CE

The VEGATOR 256C signal conditioning instrument meets the protective regulations of EMC (89/336/EWG). Conformity has been judged acc. to the following standards:

EMC	Emission	EN 50 081 - 1: 1992
	Susceptibility	EN 50 082 - 2: 1995 EN 61 010 - 1: 1993

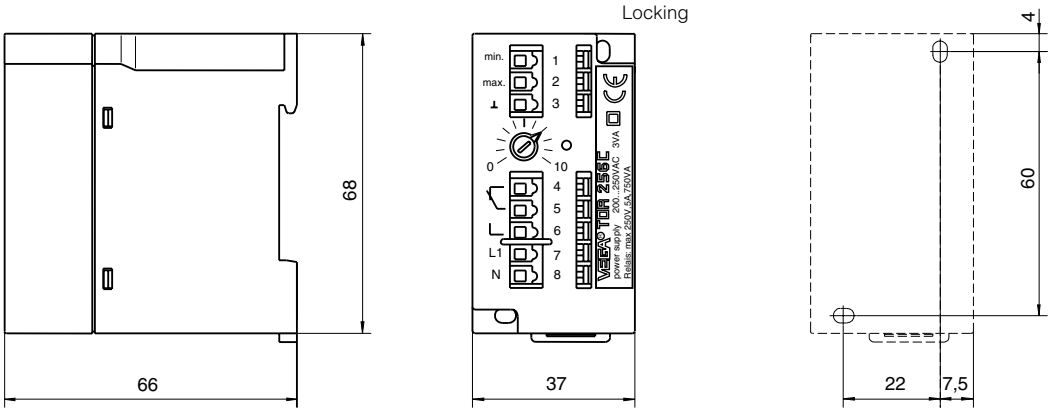

2.3 VEGATOR 532 Ex signal conditioning instrument

General

Series	19" module card, multipoint connector acc. to DIN 41 612 including transparent cover
Dimensions	W = 25.4 mm (5 TE), H = 128.4 mm, D = 162 mm
Weight	approx. 170 g

Power supply

Operating voltage	20 … 53 V AC, 50/60 Hz 20 … 72 V DC
Power consumption	max. 2 W, 3 VA
Fuse	
- supply range	T 1 A, 250 V
- switch off ability	min. 35 A at 250 V AC or 125 V DC

Measuring data input (channel)

Number	2 (2 x level detection or 2 x pump control Min/Max)
Response resistance	1 … 200 kΩ adjustable
Parallel resistor	
- for fault monitoring	220 kΩ
Loop	max. 5 V_{eff}, max. 1 mA
Permissible line capacitance	1 x 100 nF or 2 x 70 nF at min./max.-control
Switching hysteresis	approx. 15 %

Ex technical data

Signal circuits	in classification intrinsic safety EEx ia IIC
Max. values	
- U_O	10.6 V
- I_K	8 mA
- P	20 mW
Characteristics	linear
Effective inductance	negligible
Effective capacitance	negligible
Max. permissible inductance	5 mH
Max. permissible capacitance	570 nF

The intrinsically safe circuits are reliably galvanically isolated from the non-intrinsically safe circuits up to a peak value of the nominal voltage of 375 V.
The intrinsically safe circuits of channel 1 and channel 2 are galvanically isolated.

Relay outputs

Number	2
Mode	overfill protection (A) and dry run protection (B) separately adjustable for each output (channel)
Contact	per output 1 spdt
Contact material	AgCdO and Au plated
Turn-on voltage	min. 10 mV max. 250 V AC or 250 V DC
Switching current	min. 10 µA max. 3 A AC or 1 A DC
Breaking capacitance	max. 750 VA or 54 W

Transistor outputs

Number	2 (synchronously switching with the relay outputs)
Galvanic separation	floating
Turn-on voltage	U_B = max. 36 V DC
Switching current	I_B = max. 60 mA
Voltage loss on the transistor	U_{CE} = 1.5 V at I_B 60 mA
Blocking current	I_O < 10 µA

Integration time

Fixed value	0,5 sec

Ambient conditions

Permissible operating temperature	-20°C ... +60°C
Storage and transport temperature	-40°C ... +70°C

Electrical protective measures

Protection	
- not mounted	IP 00
- mounted in carrier BGT 596 Ex	front side completely equipped IP 30 upper and lower side IP 20 wiring side IP 00
- mounted in housing type 505 Ex	IP 30
Protection class	II
Overvoltage category	II

Electrical connection

Mounted in	
- carrier BGT 596 Ex	33-pole multipoint connector, series F d, b, z with coding holes
- housing type 505 Ex	screw terminal, max. 1 x 1.5 mm²

CE conformity CE

The VEGATOR 532 Ex signal conditioning instrument meets the protective regulations of EMC (89/336/EWG) and NSR (73/23/EWG). Conformity has been judged acc. to the following standards:

EMC	Emission	EN 50 081 - 1
	Susceptibility	EN 50 082 - 2
NSR		EN 61 010

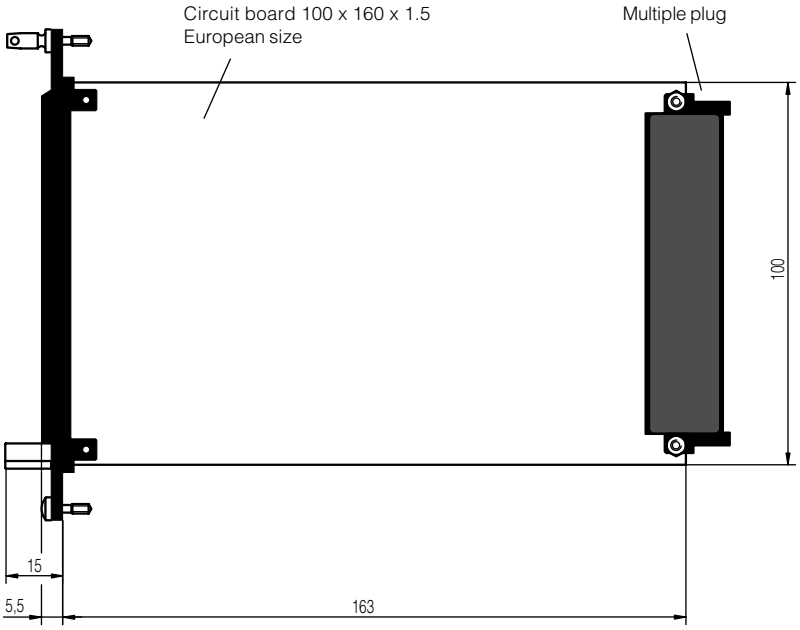

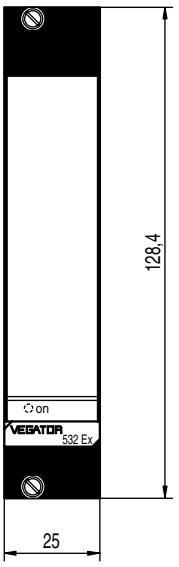

Potential stages and galvanic isolation

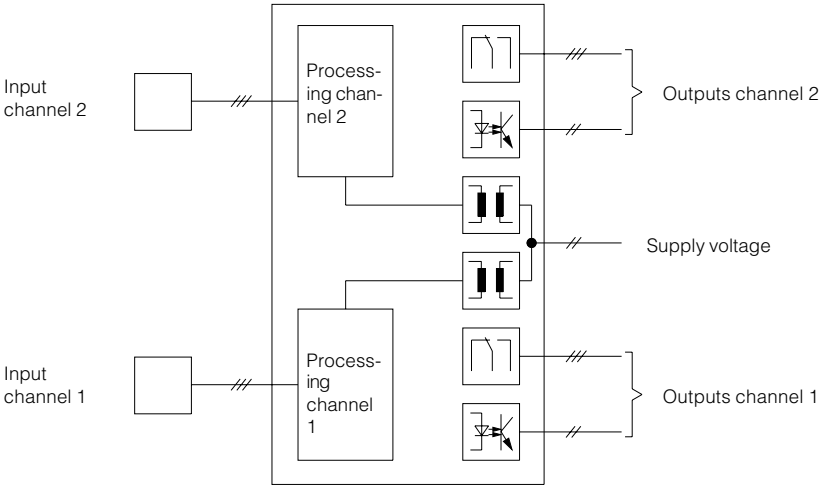

2.4 VEGATOR 631 Ex signal conditioning instrument

General

Series	module unit with plug-in socket including transparent cover, cover of the special terminals, coded pin, two bridges
Mounting	carrier rail mounting acc. to EN 50 022
Dimensions	W = 36 mm, H = 118.5 mm, D = 134 mm
Weight	approx. 170 g

Power supply

Operating voltage	20 … 250 V AC, 50/60 Hz 20 … 72 V DC
Power consumption	approx. 1 … 9 VA, max. 1.5 W
Fuse	
- supply range	T 315 mA, 250 V
- switch off ability	min. 35 A at 250 V AC or 125 V DC

Measuring data input (channel)

Number	1 (1 x level detection or 1 x pump control Min/Max)
Response resistance	1 … 200 kΩ adjustable
Parallel resistor	
for fault monitoring	220 kΩ
Loop	max. 5 V_{eff}, max. 1 mA
Permissible line capacitance	1 x 100 nF or 2 x 70 nF at min./max.-control
Switching hysteresis	approx. 15 %

Ex technical data

Signa circuit	in classification intrinsic safety EEx ia IIC
Max. values	
- U_O	10.6 V
- I_K	8 mA
- P	20 mW
Characteristics	linear
Effective inductance	negligible
Effective capacitance	negligible
Max. permissible inductance	5 mH
Max. permissible capacitance	570 nF

The intrinsically safe circuits are galvanically separated from the non-intrinsically safe circuits up to a peak value of the nominal voltage of 375 V.

Relay outputs

Number	1
Mode	overfill protection (A) and dry run protection (B) adjustable
Contact	per output 1 spdt
Contact material	AgNi and Au plated
Turn-on voltage	min. 10 mV max. 250 V AC or 250 V DC
Switching current	min. 10 µA max. 3 A AC or 1 A DC
Breaking capacitance	max. 750 VA or 54 W

Transistor outputs

Number	1 (synchronously switching with the relay outputs)
Galvanic separation	floating (short circuit proof)
Turn-on voltage	U_B = max. 36 V DC
Switching current	I_B = max. 60 mA
Voltage loss on the transistor	U_{CE} = 1.5 V at I_B 60 mA
Blocking current	I_O < 10 µA

Integration time

Adjustable	0,5 … 20 sec

Ambient conditions

Permissible operating temperature	-20°C … +60°C
Storage and transport temperature	-40°C … +70°C

Electrical protective measures

Protection	IP 20
Protection class	II
Overvoltage category	II

Electrical connection

Screw terminal	max. 1 x 1.5 mm²

CE conformity CE

The VEGATOR 631 Ex signal conditioning instrument meets the protective regulations of EMC (89/336/EWG) and NSR (73/23/EWG). Conformity has been judged acc. to the following standards:

EMC	Emission	EN 50 081 - 1
	Susceptibility	EN 50 082 - 2
NSR		EN 61 010

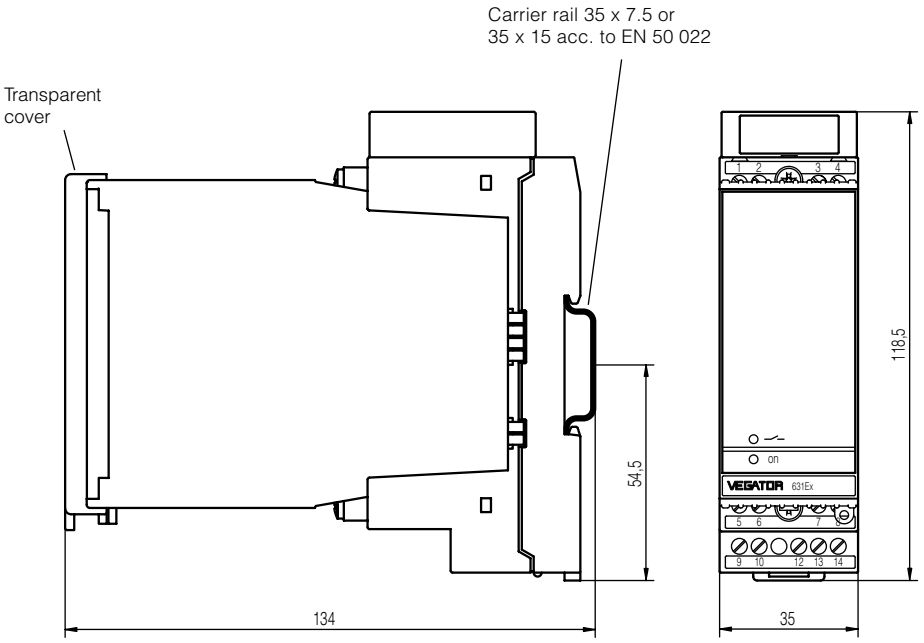

Potential stages and galvanic isolation

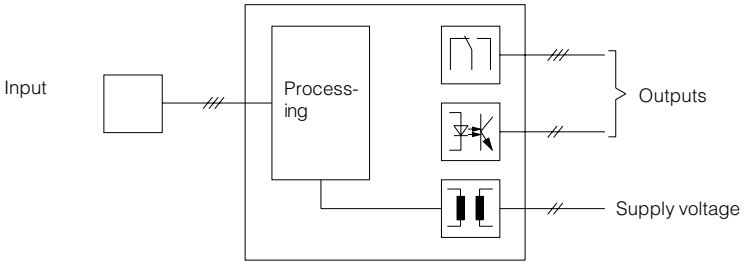

2.5 VEGAKON 61 and VEGAKON 63 compact instrument

Mechanical configuration

Housing

Material	plastic PBT (Polyester)
Protection	IP 66
Cable entry	
- with relay module	2 x Pg 13.5
- with transistor module	1 x Pg 13.5
Terminals	max. 1 x 1.5 mm^2

Mechanical connection

Socket	
- thread	G 1 A
- material	stainless steel 1.4571
Tapered socket (only VEGAKON 63)	
- cone	DN 25
- material	stainless steel 1.4571

Extension tube only for VEGAKON 63

Material	
for tube and temperature adapter	stainless steel 1.4571
Length	
- socket	70 … 4000 mm
- cone DN 25	60 … 4000 mm
Outer diameter	29 mm

Annular electrode

Material	
- electrode	stainless steel 1.4571
- insulation	PTFE

Weight

VEGAKON 61	approx. 0.6 kg
VEGAKON 63	approx. 0.6 kg
Extension tube	approx. 1 kg/m

Electrical configuration

General data

Electric conductance	min. 7.5 µS/cm
Voltage	approx. 1 V_{ss}, 5 kHz
Current	< 1 mA
Integration time	approx. 0.5 sec
Mode	overfill protection (A) and dry run protection (B) adjustable
Protection class	I
Overvoltage category	III

Relay output (KON E60 R)

Power supply	20 … 250 V AC, 50/60 Hz 20 … 72 V DC
Power consumption	approx. 1 … 8 VA, max. 1.5 W
Relay output	
- Contact	1 spdt
- Contact material	AgNi and Au plated
- Turn-on voltage	min. 10 mV max. 250 V AC or 250 V DC
- Switching current	min. 10 µA max. 3 A AC or 1 A DC
- Breaking capacitance	max. 750 VA or 54 W

Transistor output (KON E60 T)

Supply voltage	10 … 55 V DC
Power consumption	max. 0.5 W
Transistor	floating, overload resistant and short circuit proof, NPN or PNP action (depending on connection)
Turn-on voltage	U_B = max. 55 V DC
Switching current	I_B = max. 400 mA
Voltage loss on the transistor	U_{CE} = 1 V at I_B 400 mA
Blocking current	I_O < 10 µA

Operating conditions

Temperatures

Permissible ambient temperature	-40°C … +70°C
- relay module at operating voltage > 60 V DC	-40°C … +50°C
Storage and transport temperature	-40°C … +80°C
Permissible product temperature	
- without temperature adapter	-40°C … +100°C
- with temperature adapter	-40°C … +150°C

Permissible ambient temperature on the housing in relation to the product temperature

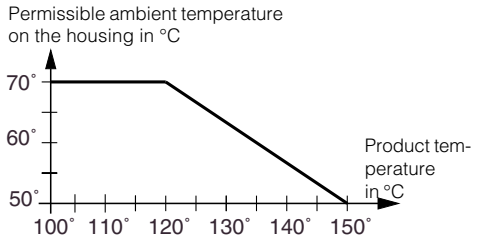

Operating pressure

Max. pressure	25 bar
Pressure with locking	0 bar or vacuum

Vessel pressure in relation to the product temperature

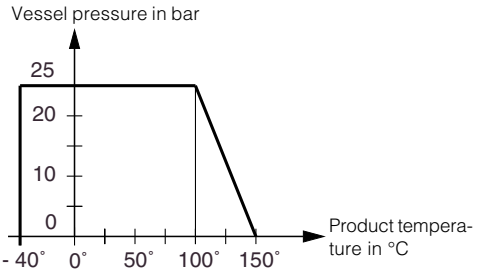

CE conformity CE

VEGAKON 61 and 63 compact instruments meet the protective regulations of EMC (89/336/EWG) and NSR (73/23/EWG). Conformity has been judged acc. to the following standards:

EMC	Emission	EN 50 081 - 1
	Susceptibility	EN 50 082 - 2
NSR		EN 61 010

2.6 VEGAKON 66 compact instrument

Housing

Housing material	plastic PBT (Polyester) or Aluminium (plastic coated)
Protection	
- plastic housing	IP 66
- aluminium housing	IP 66 and IP 67 (meets both protections)
Cable entry	1 piece M 20x1.5 (KON E66 R: 2 pieces M 20x1.5)
Terminals	max. 1 x 1.5 mm^2 conductor cross-sections

Mechanical connection

Thread	G 1 ½ A
- material	PP

Rod electrodes

Material	1.4571 (stainless steel)
Length	120 … 4000 mm

Weight

VEGAKON 66	540 g
Rod	100 g/m

Ambient conditions

Ambient temperature on the housing	-40°C… +70°C
Storage and transport temperature	-40°C … +80°C
Product temperature	-20°C … +100°C

Operating pressure

Operating pressure	-1 bar up to 6 bar

Product

Response resistance	100 Ohm … 300 kOhm adjustable
Conductance	min. 1 µS correspond approx. 20 mm Bedeckung des Elektrodenstabs bei Verwendung einer Masseelektrode

Function

Mode	A/B-mode in the oscillator A: max. detection, overfill protection B: min. detection, dry run protection
Integration time	adjustable approx. 0.5 … 20 s
Frequency	approx. 5 kHz
Hysteresis	approx. 15% with vertical installation
Signal lamp	LED for indication of the switch point

CE conformity CE

The VEGAKON 66 conductive level switch meets the protective regulations of EMC (89/336/EWG) and NSR (73/23/EWG). Conformity has been judged acc. to the following standards:

EMC	Emission	EN 50 081-1: 1992
	Susceptibility	EN 50 082-2: 1995
NSR		EN 61 010 -1:1993

Oscillators

R - Relay output (KON E66 R)

Supply voltage	20 … 250 V AC, 50/60 Hz or 20 … 72 V DC (at U > 60 V DC the ambient temperature can be max. 50°C)
Power consumption	1 … 9 VA AC, max. 1.5 W DC
Output	relay output (DPDT), 2 floating spdt
Relay data	
- potential separation	min. 500 V DC
- contact material	AgCdO and Au plated
- turn-on voltage	min. 10 mV max. 250 V AC, 250 V DC
- switching current	min. 10 µA max. 5 A AC, 1 A DC
- breaking capacitance	max. 750 VA AC, 54 W DC
Protection class	I
Overvoltage category	II
Modes (selectable)	A: max. detection, overfill protection B: min. detection, dry run protection
Integration time	0,5 … 20 sec adjustable

T- Transistor output (KON E66 T)

Supply voltage	10 … 55 V DC
Power consumption	max. 0.5 W
Output	floating transistor output overload resistant and short circuit proof
Load current	max. 400 mA
Voltage loss	max. 1 V
Turn-on voltage	max. 55 V DC
Blocking current	< 10 µA
Protection class	II
Overvoltage category	III
Modes (selectable)	A: max. detection, overfill protection B: min. detection, dry run protection
Integration time	0,5 … 20 sec adjustable

VEGAKON 66

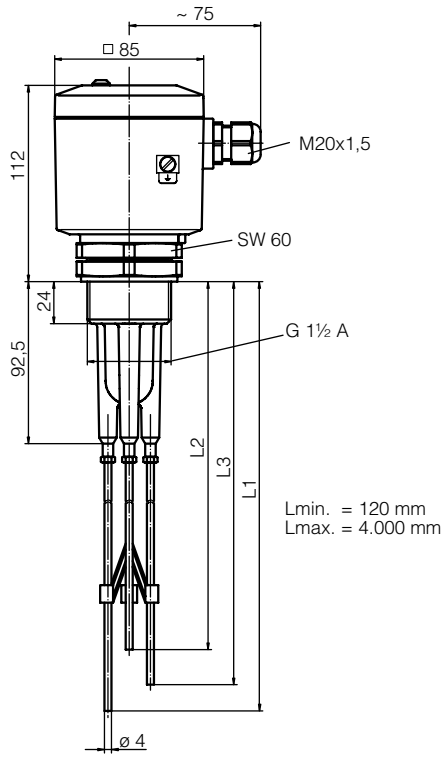

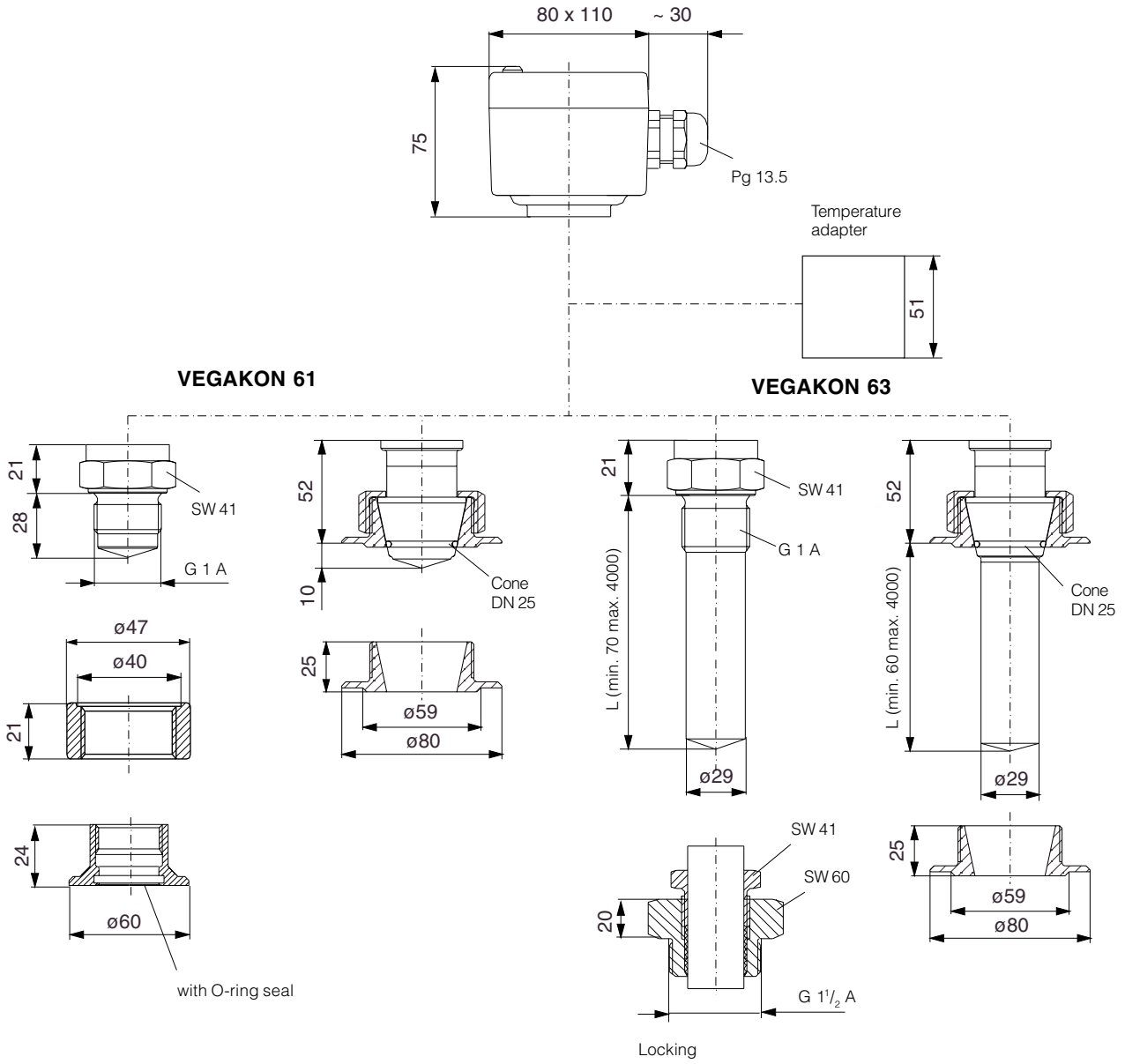

Plastic housing

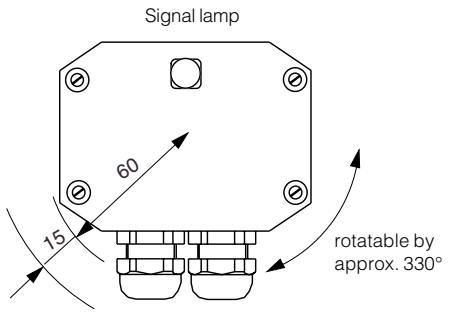

2.7 Approvals

If measuring systems are installed according to the following approvals, the appropriate official documents must be observed. The documents are supplied with the appropriate measuring system.

WHG-approval

Instrument	Oscillator	VEGATOR level switch	Test certificate number
Electrodes EL 1 EX, EL 2 EX, EL 3 EX, EL 5 EX, EL 9 EX		532 Ex 631 Ex	Z-65.13-7 applied

Ex approval

For measuring systems in hazardous areas, certificate according to CENELEC.

Instrument	Certificate PTB-no.	Classification	Ex proofing	VEGATOR level switch	Certificate PTB-no.
Conductive electrodes EL 1 EX, EL 2 EX, EL 3 EX, EL 5 EX, EL 9 EX	PTB-no. Ex-93.C.4048 X	EEx ia IIC T6	intrinsically safe	535 Ex 532 Ex 631 Ex	Ex-93.C.4049 X Ex-96.D.2055 X Ex-96.D.2064

All above mentioned instruments, except the conductive electrodes, can be connected (in conjunction with safety barrier type 145) to suitable non-Ex two-wire instruments VEGATOR as well as to VEGALOG 571. The conformity certificate PTB-no. Ex.85.B.2038 must thereby be noted.

Marine approvals

Instruments	Test certificate no.	Oscillator	VEGATOR level switch	Test certificate no.
Electrodes EL 1 (Ex) EL 2 (Ex) EL 3 (Ex) EL 5 (Ex) EL 9 (Ex)	GL: 14380-99 HH LR: 9920014		532 (Ex) 631 (Ex)	GL: 96790-95 HH LR: 97/20010 ABS: 97-EX 12269-X (1/8)
VEGAKON 61 VEGAKON 63	GL: 96712-95 HH	KON E60 R KON E60 T	compact instr.	

CE conformity

see technical data

3 Mounting and installation instructions

General
When installing the electrodes, make sure that the rod and cable electrodes do not touch the vessel wall.

Lateral load
Give attention that the electrode is not subjected to strong lateral forces.

Mount the electrode at a position where no interfering influences such as by stirrers, vessel openings etc. can occur. This is particularly valid for electrodes with very long rods and cables or for electrodes with tube extension (e.g. VEGAKON 63).

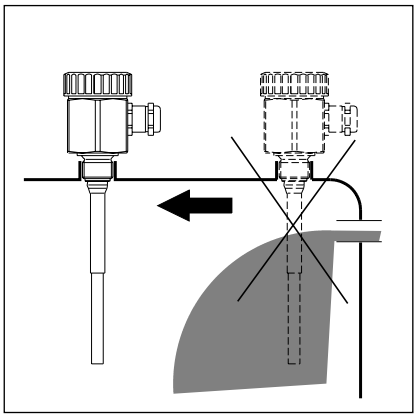

Lateral load

If it is not possible to change the installation position, it may be necessary to stabilize the rod or cable electrode by an insulating holder.

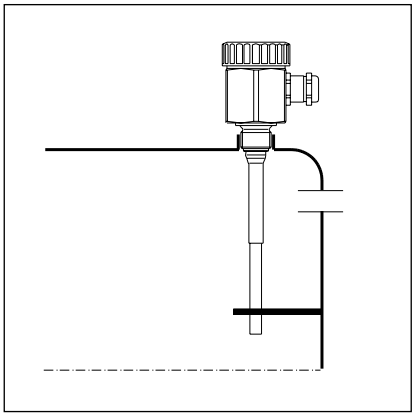

Stabilised by an insulating holder

Pressure
In case of gauge or low pressure in the vessel, the mounting boss must be sealed at the thread. Use the attached seal ring. Check if the seal ring is resistant against the measured product.

Insulating measures such as e.g., covering the thread with teflon tape, can interrupt the necessary electrical connection in metal vessels. Therefore earth the electrode, see "Earth".

Earth connection
Note that the mechanical connection of the electrode is connected electrically conductive to the vessel, to provide sufficient earth. Use conductive seals such as e.g. copper, lead etc. Insulating measures such as e.g., covering the thread with teflon tape interrupt the necessary electrical connection. Therefore, earth the electrode. An earth terminal is located laterally on the housing.
This is particularly valid for electrodes EL 1 and EL 2 as well as for VEGAKON 66 with one probe.

Horizontal installation
When mounting a VEGAKON 66 laterally, we recommend an inclined position of approx. 20° so that the liquid can drain off more easily and buildup on the insulation is avoided.

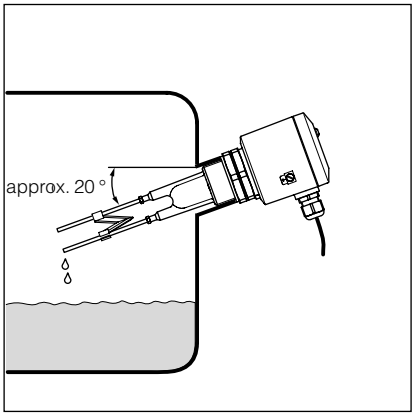

Horizontal installation

Bypass pipes
In case of strong product currents, foam generation and flow in the vessels, conductive electrodes or a VEGAKON 66 can also be mounted in bypass pipes.

Shortening of the electrode
The rods of the electrode can be shortened individually.

4 Electrical connection

4.1 VEGATOR 256C

Single point control/level detection

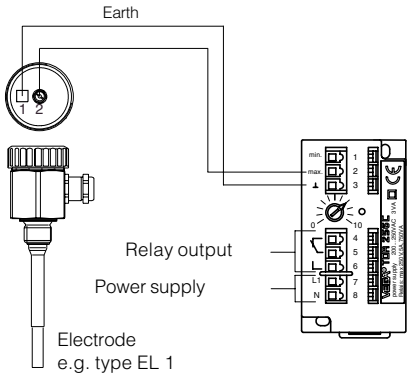

Double point control/pump control
(Min./max.-control)

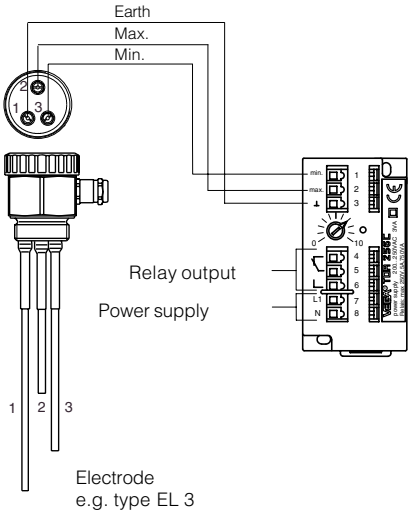

Twofold single point control/level detection
For a twofold single point control, e.g. with EL 3, you require two VEGATOR 256 B. The earth cable is looped to all signal conditioning instruments.

Note:
Multiple rod electrodes which are connected to several signal conditioning instruments or to a multiple channel instrument require a ground connection to avoid mutual interference among the signal conditioning instruments.

4.2 VEGATOR 532 Ex

Use a separate cable for each VEGATOR 532 Ex signal conditioning instrument or for each measuring channel over a cable length of 50 m, to avoid capacitive coupling. In case you want to use a common cable, make sure that the cables of the max. and min. signal are shielded. Connect the shields to earth.

Twofold single point control/level detection
(Min./max.-signal)

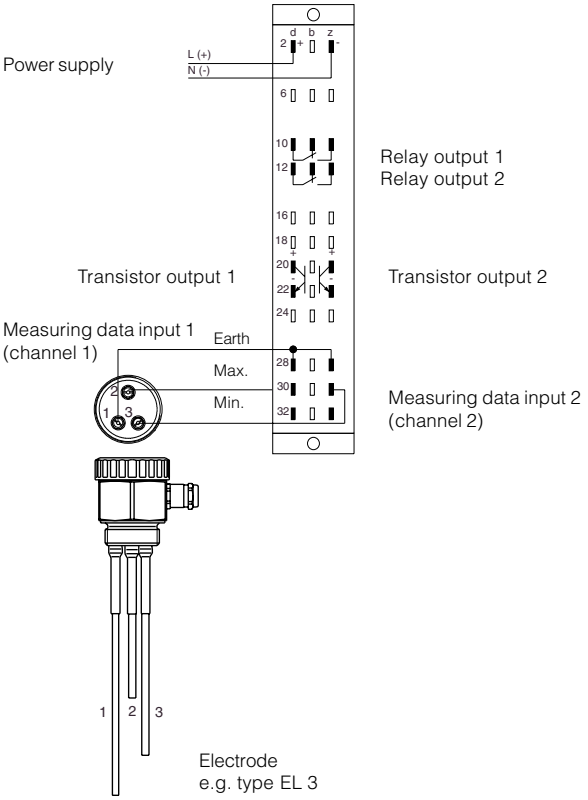

Double point control/pump control
(Min./max.-control)

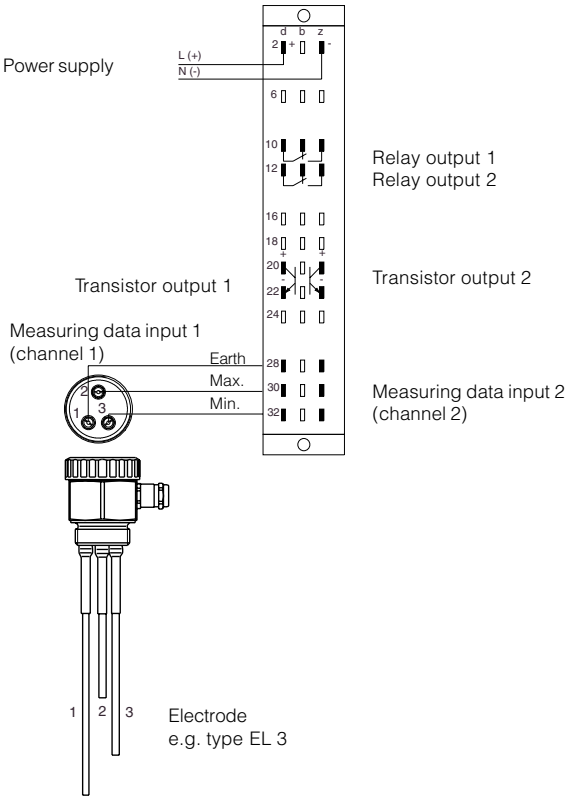

Double two-point control/pump control
For a double two-point control e.g. with EL 5 you require a VEGATOR 532 Ex.

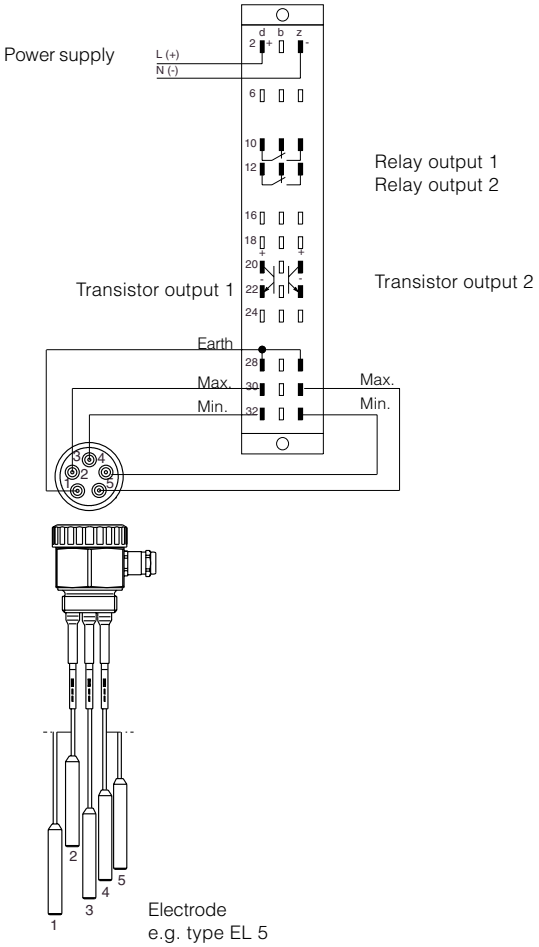

VEGATOR 532 Ex with housing type 505
The terminal designation for the power supply and the relay or transistor output correspond to that on the multipoint connector. The connection of the electrode must be carried out as shown:

Twofold single point control/level detection

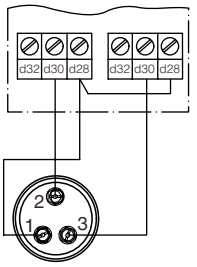

Two-point control/pump control

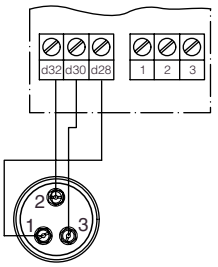

Switching of the transistor outputs VEGATOR 532 Ex

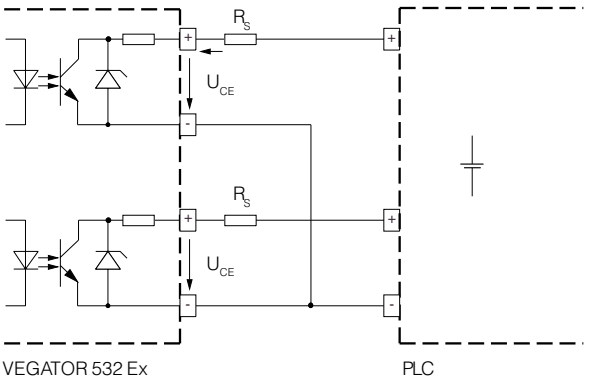

The resistor R_S is used as shortcircuit protection.

R_S	P
47 Ω	0.25 W
150 Ω	0.75 W
330 Ω	1.5 W
560 Ω	2.2 W

4.3 VEGATOR 631 Ex

Single point control/level detection

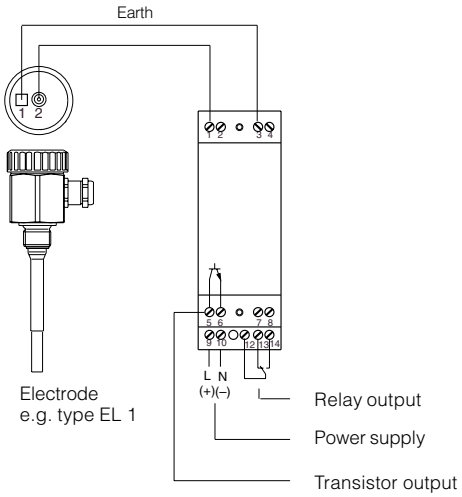

Two-point control/pump control
(Min./max.-control)

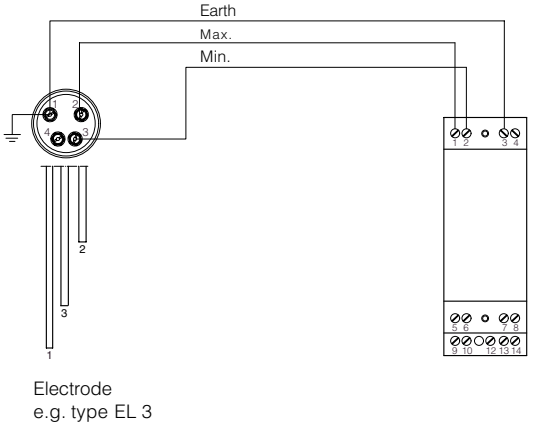

Twofold single point control/level detection
For a twofold single point control e.g. with EL 3 you require two VEGATOR 631 Ex. The earth cable is looped to all signal conditioning instruments.

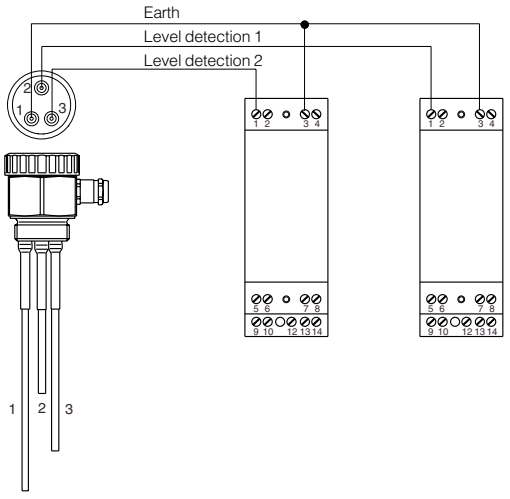

Double two-point control/pump control
(Min./max.-control)
For a double two-point control e.g. with EL 5 you require two VEGATOR 631 Ex. The earth cable is looped to all signal conditioning instruments.

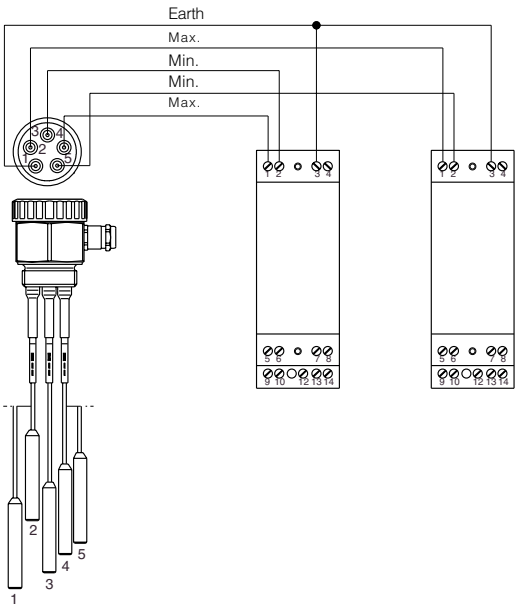

Two-point control/pump control (Min./Max.) with overfill protection

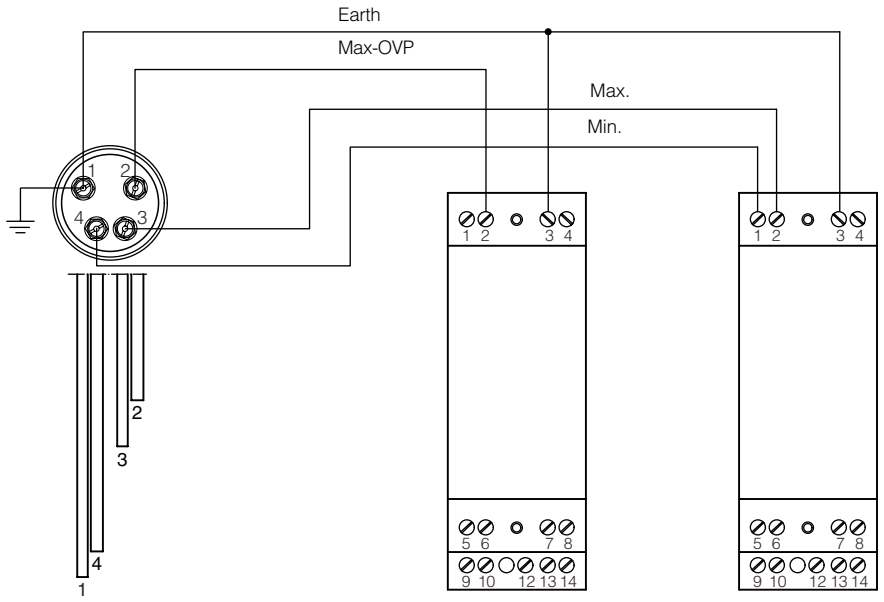

4.4 VEGAKON 61/63 and VEGAKON 66

Connection of the relay module (KON E60 R)

(VEGAKON 61 and 63)

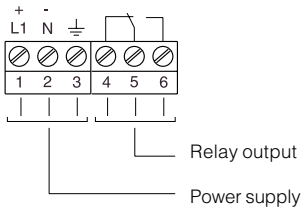

Connection of the relay module (KON E66 R) (VEGAKON 66)

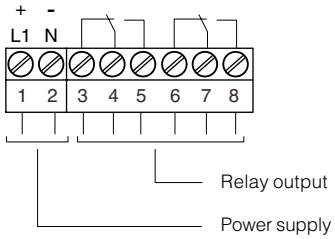

Connection of the transistor module

The transistor switches the supply voltage of the oscillator to the binary input of a PLC or to an electrical load.
PNP or NPN action can be achieved by changing the connection of the consumer (load).

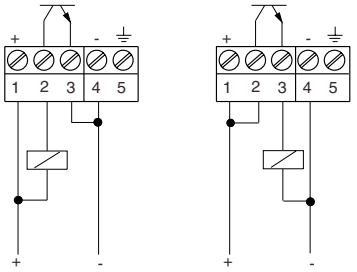

NPN action PNP action

The transistor switches a second voltage source with the same reference potential to the binary input of a PLC or to an electrical load.
PNP or NPN action can be achieved by changing the connection of the consumer (load).

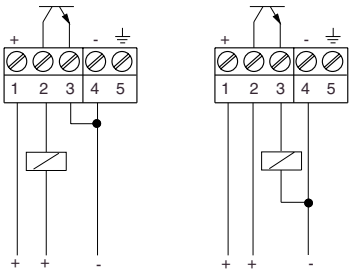

NPN action PNP action

The transistor switches a second, galvanically isolated voltage source to the binary input of a PLC or to an electrical load.
PNP or NPN action can be achieved by changing the connection of the consumer (load).

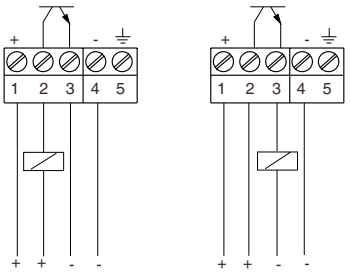

NPN action PNP action

Control of alternating current loads

The transistor switches a galvanically isolated alternating voltage 0 … 42 V AC to a load.

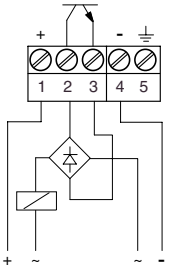

The transistor switches an alternating voltage 10 … 42 V AC, which is also supply voltage, to a load.

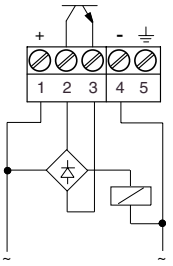

Level and Pressure

VEGA Grieshaber KG
Am Hohenstein 113
D-77761 Schiltach
Phone (07836) 50-0
Fax (07836) 50-201
e-mail info@vega-g.de
internet www.vega-g.de

VEGA - Your worldwide sales and service partner

Argentina
Australia
Austria
Belgium/ Luxembourg
Brazil
Bulgaria
Chile
China
Columbia
Croatia
Czech Republic
Denmark
Egypt
Finland
France
Germany
Greece
Great Britain
Hong Kong
Hungary
India
Indonesia
Iran
Israel
Italy
Japan
Korea
Lithuania
Malaysia
Netherlands
New Zealand
Norway
Peru
Philippines
Poland
Portugal
Romania
Singapore
Slovakia
Slovenia
Southern Africa
Spain
Sweden
Switzerland
Taiwan
Thailand
Turkey
USA/Canada
United Arab. Emirates
Venezuela

Detailed information on our homepage www.vega-g.de.

The statements about types, application, use and operating conditions of the sensors and processing systems correspond to the latest information at the time of printing.

Technical data subject to alterations

2.19 879 / Nov. 1999