STRAIGHT PLUG

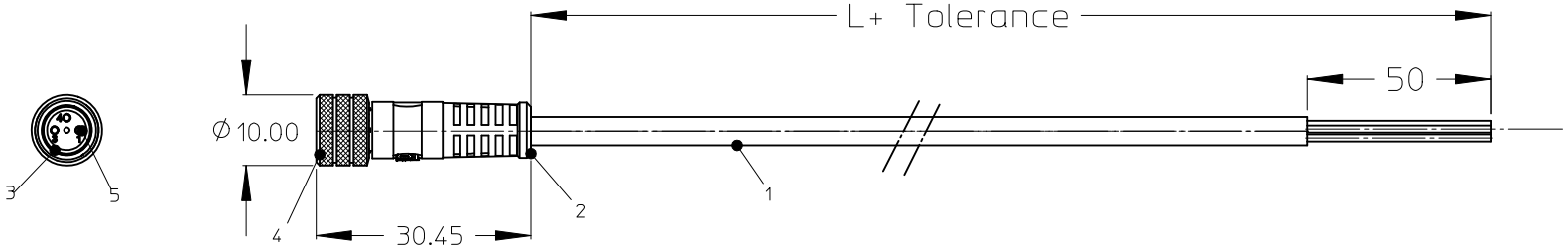

NOTES:

Temperatur Range:	-25°C/+80°C
contact Current Rating:	3A
Voltage Rating:	3 poles 60V
	3-5 poles 30V
Protection class:	IP 67

Cable:

E02 = 0,25mm², PVC black
H08 = 0,25mm², PUR black
I02 = 0,25mm², PVC grey irradiated
K05 = 0,34mm², TPE yellow
P02 = 0,25mm², PUR/PVC black
P08 = 0,25mm², PUR yellow HIFLEX
P82 = 0,34mm², PUR black irradiated

Tolerances:

≤ 1 m	+20/-10 mm
1 m - 5 m	± 25 mm
5 m - 10 m	± 30 mm
> 10 m	± 30 mm
> 20 m	± 50 mm
> 30 m	± 60 mm

ITEM	Part	Material	Finish
6	O-Ring	Rubber	---
5	Contact	Copper Alloy	Gold plated
4	Coupling Nut	Brass	Ni plated
3	Insert	PUR	---
2	Overmold	PUR	---
1	Cable	See Table	---

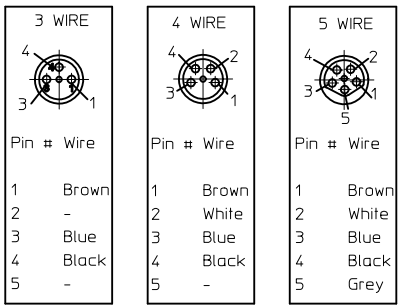

ENTER DESCRIPTION
EC NO: IPG2012-0232 2011/08/22
DRWN:APOHL
CH'KD:CBURGER 2012/01/18
APPR:CBURGER
DESCRIPTION
1
REV

QUALITY SYMBOLS
▼=0
Ⓒ=0

GENERAL TOLERANCES (UNLESS SPECIFIED)

	mm	INCH
4 PLACES	± ---	± ---
3 PLACES	± ---	± ---
2 PLACES	± ---	± ---
1 PLACE	± 0.3	± ---
ANGULAR ± 1 °		

DRAFT WHERE APPLICABLE MUST REMAIN WITHIN DIMENSIONS

DIMENSION STYLE: MM ONLY
SCALE: 1:1
DESIGN UNITS: METRIC
THIRD ANGLE PROJECTION

DRAWN BY: APOHL DATE: 2011/08/22
CHECKED BY: REISSNER DATE: 2012/01/16
APPROVED BY: CBURGER DATE: 2012/01/18

TITLE: CSE M8 XP XC FE STR XM SE UNSH NANO- CHANGE

molex MOLEX INCORPORATED

MATERIAL NO.: SEE TABLE
DOCUMENT NO.: SD-120086-001
SHEET NO.: 1 OF 3
SIZE: A4

THIS DRAWING CONTAINS INFORMATION THAT IS PROPRIETARY TO MOLEX INCORPORATED AND SHOULD NOT BE USED WITHOUT WRITTEN PERMISSION

NUMERICAL CODE

(Available parts see table page 3 ff others on request.)

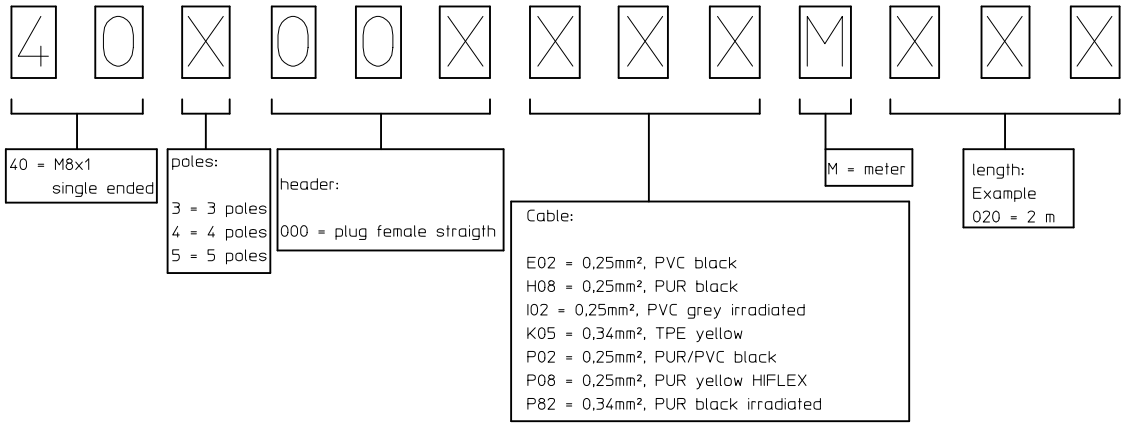

Special Types:

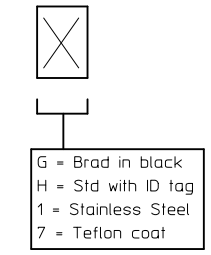

ENTER DESCRIPTION
EC NO: IPG2012-0232 2011/08/22
DRWN:APOHL
CH'KD:CBURGER
APPR:CBURGER 2012/01/18
DESCRIPTION
1
REV

QUALITY SYMBOLS
▼=0
Ⓒ=0

GENERAL TOLERANCES (UNLESS SPECIFIED)

	mm	INCH
4 PLACES	± ---	± ---
3 PLACES	± ---	± ---
2 PLACES	± ---	± ---
1 PLACE	± 0.3	± ---
ANGULAR ± 1 °		

DRAFT WHERE APPLICABLE MUST REMAIN WITHIN DIMENSIONS

DIMENSION STYLE	MM ONLY
SCALE	3:1
DESIGN UNITS	METRIC
	THIRD ANGLE PROJECTION
DRAWN BY / DATE	APOHL 2011/08/22
CHECKED BY / DATE	REISSNER 2012/01/16
APPROVED BY / DATE	CBURGER 2012/01/18
MATERIAL NO.	SEE TABLE
TITLE	CSE M8 XP XC FE STR XM SE UNSH NANO- CHANGE
	MOLEX INCORPORATED
DOCUMENT NO.	SD-120086-001
SHEET NO.	2 OF 3
SIZE	A4

THIS DRAWING CONTAINS INFORMATION THAT IS PROPRIETARY TO MOLEX INCORPORATED AND SHOULD NOT BE USED WITHOUT WRITTEN PERMISSION

PART LIST:

1200868262	403000E02M002
1200868263	403000E02M003
1200271417	403000E02M006
1200270400	403000E02M010
1200271410	403000E02M012
1200271418	403000E02M015
1200270066	403000E02M020
1200868264	403000E02M020H
1200271419	403000E02M025
1200270067	403000E02M030
1200868265	403000E02M035
1200868266	403000E02M045
1200270068	403000E02M050
1200868267	403000E02M0501
1200868268	403000E02M060
1200270070	403000E02M100
1200868423	403000E02M1001
1200868109	403000E02M100G
1200868090	403000E02M150
1200868015	403000E02M200
1200865038	403000E02M250
1200868214	403000H08M005
1200271409	403000H08M010
1200868209	403000H08M015
1200868045	403000H08M020
1200271442	403000H08M020G
1200868122	403000H08M030
1200868101	403000H08M050
1200868115	403000H08M100
1200868116	403000H08M200
1200270080	403000I02M003
1200868269	403000I02M005
1200868270	403000I02M006
1200868271	403000I02M010
1200270081	403000I02M020

1200868272	403000I02M025
1200270082	403000I02M030
1200270083	403000I02M050
1200270084	403000I02M100
1200868273	403000I02M150
1200860508	403000K05M010
1200860338	403000K05M020
1200860339	403000K05M040
1200860340	403000K05M050
1200860341	403000K05M070
1200860342	403000K05M100
1200868275	403000P02M002
1200868276	403000P02M002G
1200868277	403000P02M003
1200868278	403000P02M003G
1200868279	403000P02M005
1200868280	403000P02M006
1200868281	403000P02M010
1200868282	403000P02M012
1200868283	403000P02M018
1200868001	403000P02M020
1200868284	403000P02M022
1200868285	403000P02M030
1200868286	403000P02M032
1200868287	403000P02M035
1200868288	403000P02M040
1200868002	403000P02M050
1200868289	403000P02M050G
1200868290	403000P02M055
1200868291	403000P02M080
1200868003	403000P02M100
1200868292	403000P02M150
1200270327	403000P08M005
1200270086	403000P08M020
1200270087	403000P08M030

1200270768	403000P08M040
1200860482	403000P08M050
1200270791	403000P08M060
1200270088	403000P08M100
1200868212	403000P82M005
1200868233	403000P82M010
1200271180	403000P82M020
1200868192	403000P82M0207
1200270032	403000P82M050
1200868183	403000P82M0507
1200868420	403000P82M1007
1200271423	404000E02M005
1200270549	404000E02M010
1200868340	404000E02M015
1200270127	404000E02M020
1200868341	404000E02M0201
1200868075	404000E02M020G
1200868114	404000E02M030
1200868342	404000E02M040
1200270129	404000E02M050
1200868343	404000E02M0501
1200868067	404000E02M050G
1200868344	404000E02M080
1200270131	404000E02M100
1200868068	404000E02M100G
1200868345	404000E02M110
1200270132	404000E02M150
1200868346	404000E02M170
1200868074	404000E02M1K0G
1200270133	404000E02M200
1200868069	404000E02M200G
1200868347	404000E02M210
1200868348	404000E02M250
1200868070	404000E02M300G
1200868071	404000E02M400G

1200868072	404000E02M500G
1200868073	404000E02M700G
1200868215	404000H08M005
1200868207	404000H08M020
1200868060	404000H08M030
1200868162	404000H08M040
1200868053	404000H08M050
1200868117	404000H08M100
1200868118	404000H08M200
1200270148	404000I02M003
1200860041	404000I02M020
1200270149	404000I02M030
1200868350	404000I02M050
1200270360	404000I02M050G
1200860369	404000I02M100
1200860370	404000K05M020
1200860371	404000K05M050
1200868349	404000K05M100
1200868351	404000P02M003
1200868156	404000P02M020
1200868352	404000P02M030
1200868353	404000P02M040
1200868157	404000P02M050
1200868354	404000P02M070
1200868158	404000P02M100
1200868355	404000P02M500
1200270150	404000P08M020
1200270649	404000P08M030
1200270151	404000P08M050
1200270371	404000P08M100
1200868213	404000P82M005
1200868232	404000P82M010
1200271042	404000P82M0207
1200271305	404000P82M050
1200271450	404000P82M0507

1200868099	405000E02M020
1200868151	405000E02M040
1200868171	405000E02M050
1200868172	405000E02M100
1200868395	405000H08M020
1200868404	405000H08M050
1200868405	405000H08M100
1200868148	405000P02M005
1200270709	405000P02M020
1200860592	405000P02M040
1200860475	405000P02M050
1200860593	405000P02M060
1200270854	405000P02M075G
1200860594	405000P02M100

ENTER DESCRIPTION
EC NO: IPG2012-0232 2011/08/22
DRWN:APOHL
CH'KD:CBURGER
APPR:CBURGER 2012/01/18
DESCRIPTION
REV
1

QUALITY SYMBOLS
▼=0
Ⓒ=0

GENERAL TOLERANCES (UNLESS SPECIFIED)

	mm	INCH
4 PLACES	± ---	± ---
3 PLACES	± ---	± ---
2 PLACES	± ---	± ---
1 PLACE	± 0.3	± ---
ANGULAR ± 1 °		

DRAFT WHERE APPLICABLE MUST REMAIN WITHIN DIMENSIONS

DIMENSION STYLE: MM ONLY
SCALE: 3:1
DESIGN UNITS: METRIC
THIRD ANGLE PROJECTION

DRAWN BY: APOHL DATE: 2011/08/22
CHECKED BY: REISSNER DATE: 2012/01/16
APPROVED BY: CBURGER DATE: 2012/01/18
MATERIAL NO.: SEE TABLE

TITLE: CSE M8 XP XC FE STR XM SE UNSH NANO- CHANGE
MOLEX INCORPORATED
DOCUMENT NO.: SD-120086-001
SHEET NO.: 3 OF 3
SIZE: A3

THIS DRAWING CONTAINS INFORMATION THAT IS PROPRIETARY TO MOLEX INCORPORATED AND SHOULD NOT BE USED WITHOUT WRITTEN PERMISSION