E12681

Connection cable

VDOGS040--S0005H04DOGH040MSS

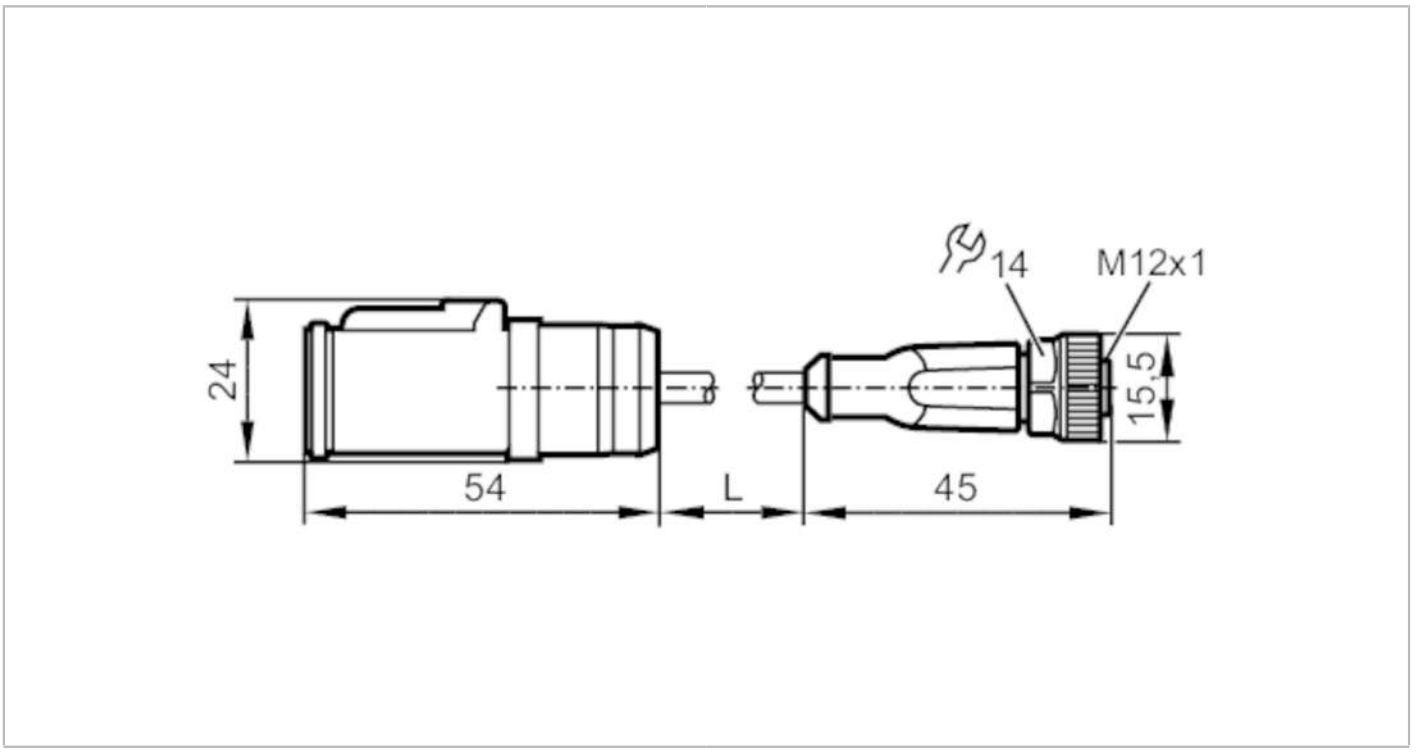

Application			
Special feature		Free from silicone; Halogen-free; Drag chain suitability	
Free from silicone		yes	
Electrical data			
Operating voltage	[V]	8...32 DC	
Protection class		III	
Max. current load total	[A]	4	
Operating conditions			
Ambient temperature	[°C]	-40...80	
Ambient temperature (moving)	[°C]	-20...80	
Protection		IP 67; (mating connector plugged in)	
Mechanical data			
Weight	[g]	272.6	
Materials		PA; socket: TPU orange; Sealing: FKM	
Material nut		brass, nickel-plated	
Drag chain suitability		yes	
Drag chain suitability		bending radius for flexible use	min. 10 x cable diameter
		travel speed	max. 3.3 m/s for a horizontal travel length of 5 m and max. acceleration of 5 m/s²
		bending cycles	> 5 Mio.
		torsional strain	± 180 °/m
Remarks			
Pack quantity		1 pcs.	

E12681

Connection cable

VDOGS040--S0005H04DOGH040MSS

Electrical connection - socket

Connector: 1 x DEUTSCH connector, straight

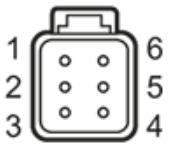

Electrical connection

Cable: 5 m, PUR, Halogen-free, black, Ø 5.4 mm; 4 x 0.50 mm² (28 x Ø 0.15 mm)

Connection

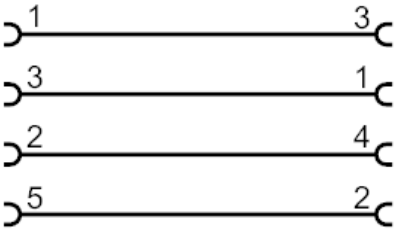

Electrical connection - socket

Connector: 1 x M12, straight; coding: A; Locking: brass, nickel-plated; Tightening torque: 0.6...1.5 Nm

