DATASHEET



PS116-T12-LR200-N200

- Pre-wired cable right, 2 m
- Slow action 1 Normally open contact (NO) / 2 Opener (NC)
- Quick connection technology as connection terminals rotated by 45°
- cable entry 1 x M20 x 1,5
- Thermoplastic enclosure
- With plastic roller
- length adjustable in 2 mm steps
- Lever angle adjustable in 15° steps
- Actuator heads can be repositioned by 8 x 45°

Data

Ordering data

Product type description	PS116-T12-LR200-N200
Article number (order number)	103006596
EAN (European Article Number)	4030661442457
eCl@ss number, version 12.0	27-27-26-01
eCl@ss number, version 11.0	27-27-26-01
eCl@ss number, version 9.0	27-27-26-01
ETIM number, version 7.0	EC000030
ETIM number, version 6.0	EC000030

Approvals - Standards

Certificates	cULus CCC

General data

Standards	EN IEC 60947-5-1
Housing construction form	Norm construction design
Actuator type to EN 50047	A
Housing material	Plastic, glass-fibre reinforced thermoplastic, zinc die-cast, chromated
Active area	Metal film
Gross weight	257 g

General data - Features

Safety functions	Yes
Number of auxiliary contacts	1
Number of safety contacts	2

Safety classification

Standards	EN ISO 13849-1
B_{10D} Normally-closed contact (NC)	20,000,000 Operations
B_{10D} Normally-open contact (NO)	1,000,000 Operations
Note	at 10% I_e and ohmic load
Mission time	20 Year(s)

Mechanical data

Actuating element	Roller lever N200
Roller material	Plastic
Mechanical life, minimum	10,000,000 Operations
Positive break force, minimum	40 N
Actuating speed, minimum	60 mm/min
Actuating speed, maximum	1 m/s
Actuating torque, minimum	0.2 Nm
Positive break torque	0.6 Nm

Mechanical data - Connection technique

Length of cable	2 m
Termination	Pre-wired cable Cable, 6-pole
Wire cross-section	0.5 mm^2
Cable type	LiYY
Terminal (mechanical)	right

Mechanical data - Dimensions

Length of sensor	16.6 mm
Width of sensor	31 mm
Height of sensor	139 mm
Diameter of Castor	20 mm

Ambient conditions

Degree of protection	IP66 IP67
Ambient temperature	-30 ... +80 °C
Protection class	II

Ambient conditions - Insulation values

Rated insulation voltage U_i	300 V
Rated impulse withstand voltage U_{imp}	4 kV
Degree of pollution	3

Electrical data

Required rated short-circuit current	400 A
Utilisation category AC-15	240 VAC
Utilisation category DC-13	24 VDC
Utilisation category DC-13	1.5 A

Switching element	1 NO contact, 2 NC contacts
Switching principle	Slow action
Bounce duration, maximum	3 ms
Maximum switching frequency	5,000 /h
Switchover time, maximum	5.5 ms
Material of the contacts, electrical	Silver

Ordering code

Product type description:
PS116-(1)-(2)-(3)-(4)

(1)

Z11	Snap action 1 NO contact / 1 NC contact
Z02	Snap action 2 NC contacts
Z12	Snap action 1 NO contact / 2 NC contact
Z11R	Snap action 1 NO contact / 1 NC contact with latching
Z02R	Snap action 2 NC contacts with latching
Z12R	Snap action 1 NO contact / 2 NC contact with latching
T11	Slow action 1 NO contact / 1 NC contact
T02	Slow action 2 NC contacts
T20	Slow action 2 NO contact
T12	Slow action 1 NO contact / 2 NC contact
T21	Slow action 2 NO contact / 1 NC contact
T03	Slow action 3 NC contacts
T11UE	Slow action 1 NO contact / 1 NC contact with overlapping contacts
T02H	Slow action 2 NC contacts with staggered contacts

(2)

L200	Connecting cable bottom, cable length 2 m
LR200	Connecting cable right, cable length 2 m
LR300	Connecting cable right, cable length 3 m
LR500	Connecting cable right, cable length 5 m

ST	Connector plug M12 - plastic - bottom
STR	Connector plug M12, right

(3)

S200	plunger S200 Ø 6 mm
R200	Roller plunger R200
K200	Offset roller lever - plastic roller- width 5.3 mm - Ø 12 mm
K210	Offset roller lever - plastic roller- width 5mm - Ø 14mm
K230	Angle roller lever - plastic roller Ø 14 mm
K240	Angle roller lever with plastic roller Ø 22 mm - right-bent
K250	Angle roller lever with plastic roller Ø 22 mm - left-bent
H200	Roller lever - plastic roller Ø 16 m - lever length 24 mm
N200	Roller lever 2 mm Toothing (24...26mm) - Plastic roller Ø 20 mm - Width 9.8 mm
J200	Rod lever - plastic - 200mm -Ø 6mm

(4)

0	Material Castor/Lever: Plastic
1	Material Castor/Lever: Stainless steel
2	Material Castor/Lever: Brass
3	Material Castor/Lever: Aluminium
4	Material Castor/Lever: Steel

Pictures

Product picture (catalogue individual photo)



ID: kps1nf01
| 313.8 kB | .jpg | 352.778 x 416.631 mm - 1000 x 1181 px - 72 dpi
| 22.8 kB | .png | 74.083 x 87.489 mm - 210 x 248 px - 72 dpi
| 29.7 kB | .jpg | 104.422 x 123.472 mm - 296 x 350 px - 72 dpi

Dimensional drawing basic component

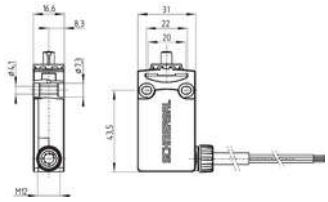

ID: kps11g04
| 246.1 kB | .ai | 200 x 200 mm - 566 x 566 px - 72 dpi
| 4.0 kB | .png | 74.083 x 44.803 mm - 210 x 127 px - 72 dpi
| 98.3 kB | .jpg | 352.778 x 214.136 mm - 1000 x 607 px - 72 dpi

Dimensional drawing actuator

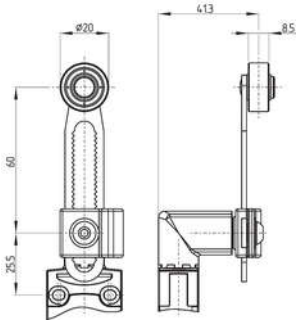

ID: kps11b10
| 445.4 kB | .ai | 141.812 x 138.775 mm - 401 x 393 px - 72 dpi
| 13.7 kB | .png | 74.083 x 72.672 mm - 210 x 206 px - 72 dpi
| 195.0 kB | .jpg | 352.778 x 383.469 mm - 1000 x 1087 px - 72 dpi

Switch travel diagram

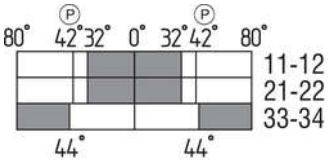

ID: kps11s61
| 2.3 kB | .png | 74.083 x 36.689 mm - 210 x 104 px - 72 dpi
| 84.8 kB | .jpg | 352.778 x 173.919 mm - 1000 x 493 px - 72 dpi

Diagram

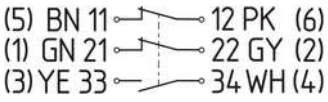

ID: kps16k09
| 1.3 MB | .cdr |
| 84.8 kB | .jpg | 352.778 x 97.367 mm - 1000 x 276 px - 72 dpi
| 3.9 kB | .png | 74.083 x 20.461 mm - 210 x 58 px - 72 dpi

Schmersal India Pvt. Ltd., Plot No - G-7/1, Ranjangaon MIDC, Tal. - Shirur, Dist.- Pune 412 220
The details and data referred to have been carefully checked. Images may diverge from original. Further technical data can be found in the manual. Technical amendments and errors possible.
Generated on: 26/12/2024, 8:39 am