EBC009

Splitter box

ZDO8H050MSS0000-00STAK120MSS

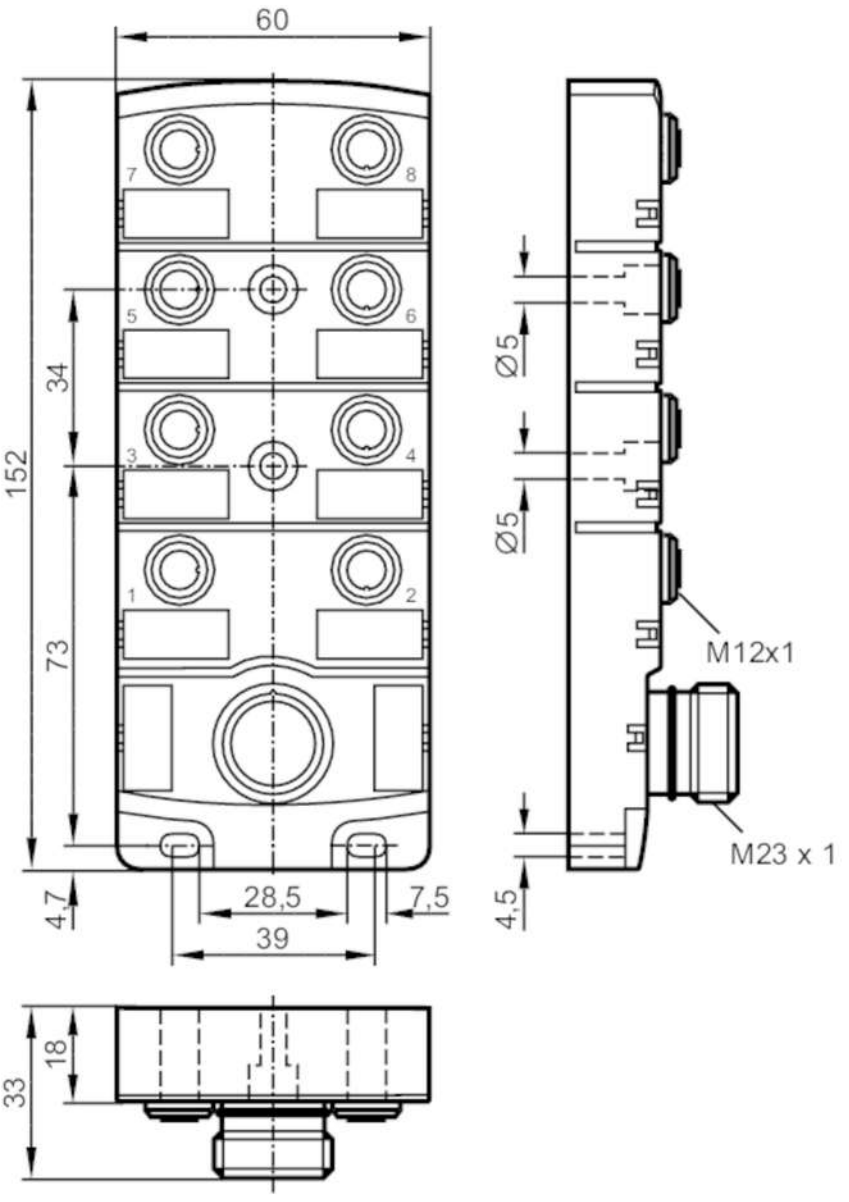

Application		
Special feature		Free from silicone; Gold-plated contacts
Free from silicone		yes
Electrical data		
Operating voltage	[V]	< 30 DC; ("supply class 2" to cULus)
Max. current load per module/slot	[A]	4
Max. current load total	[A]	12
Operating conditions		
Ambient temperature	[°C]	-25...80

EBC009

Splitter box

ZDO8H050MSS0000-00STAK120MSS

Protection			IP 67
Tests / approvals			
UL approval		Enclosure type	Type 1
Mechanical data			
Weight	[g]		303.5
Dimensions	[mm]		33 x 60 x 152
Materials			PA
Moulded-body material			PA
Number of ports splitter box			8
Connector type			M12
Accessories			
Items supplied			Protective caps: 2 labels: 8
Remarks			
Pack quantity			1 pcs.

Electrical connection - Connection

Connector: 1 x M23; Moulded body: PA; Contacts: gold-plated; Tightening torque: 0.8...1.5 Nm

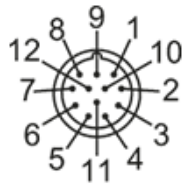

Connection

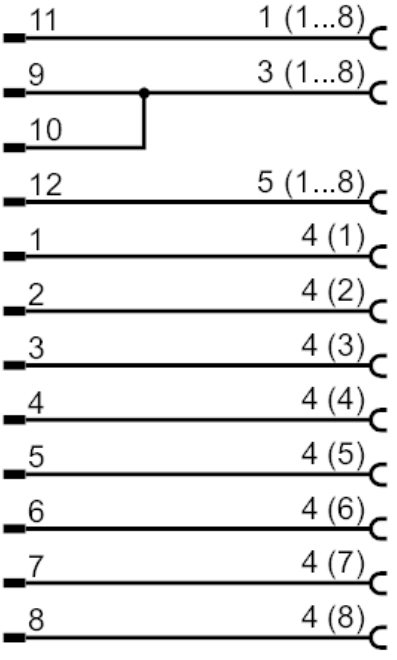

EBC009

Splitter box

ZDO8H050MSS0000-00STAK120MSS

Electrical connection - slot

Connector: 8 x M12; coding: A; Moulded body: PA; Contacts: gold-plated; Tightening torque: 0.8...1.5 Nm

