LORLIN

ROTARY SWITCH

RA

RA ROTARY SWITCH

ELECTRICAL & MECHANICAL SPECIFICATION

Switch Rating: (Resistive load)	500mA @ 24V ac/dc	**Life:**	>10,000 Cycles
Proof Voltage:	1,000Vac Initial)	**Operating Temperature:**	-30°C to +85°C
Insulation Resistance:	>999 MΩ at 500V dc (Initial)	**Operating Torque (nominal):**	Standard 7.2 cNm
Contact Resistance	<20 mΩ (Initial)	**End Stop Torque (nominal):**	1.2 Nm
Contact/Terminal Material:	Brass CZ108 Ag Plated	**Spindle Material:**	Mild Steel Zn Plated & Passivated
		Wafer Material:	Polyphenylene Sulphide (PPS)
		Housing Material:	Zinc Alloy Bright Zinc Plated

FEATURES

25.4mm diameter multi wafer switch	Adjustable stops to restrict number of positions	Shorting (MBB make before break) or non-shorting (BBM break before make) contacts	
Standard self- staking wafers	Spindles with special sizes and flats	Standard 30° indexing, 45°,60° and 90° also available	
Solder or PCB terminals	Standard silver contacts, gold flashed or gold plated also available	Mains module options	Made in UK

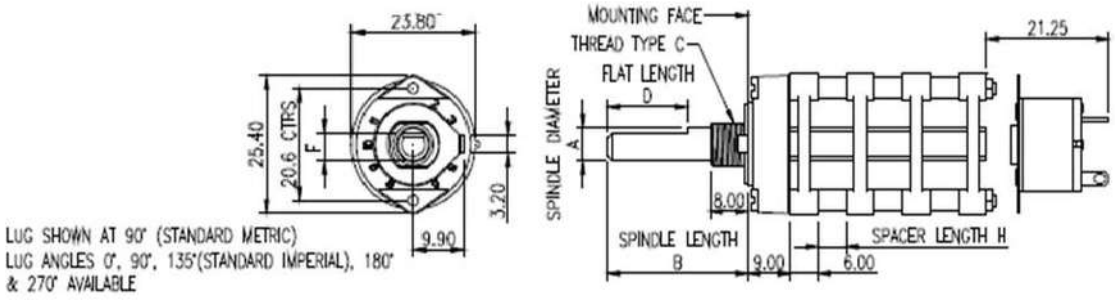

SPINDLE OPTIONS

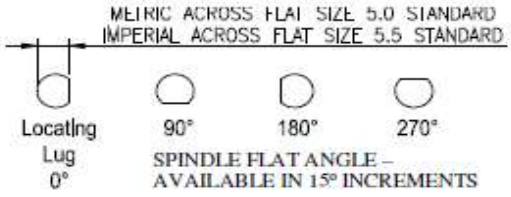

	A Spindle Diameter	B Spindle Length	C Bush Thread	D Spindle Flat Lgth	E Spindle Angle	F Spindle Flat	G Locating Lug Angle	HJKL Spacer Length
IMPERIAL	6.35mm	50mm	9.52 x 32TPI			(5.5mm)		
METRIC	6.0mm	50mm	M10 x 0.75			(5.0mm)		

30° WAFER LAYOUTS

FRONT

REAR
viewed
from front

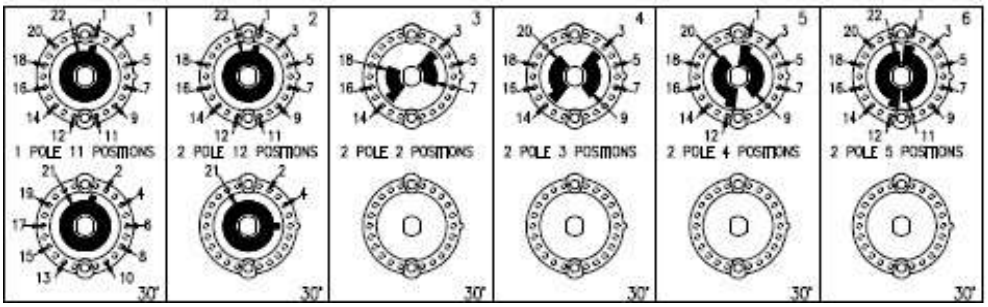

45° WAFER LAYOUTS

FRONT

REAR
viewed
from front

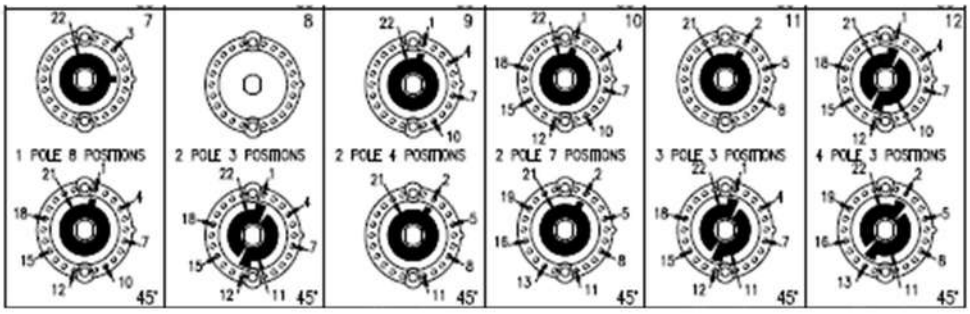

60° WAFER LAYOUTS

FRONT

REAR
viewed
from front

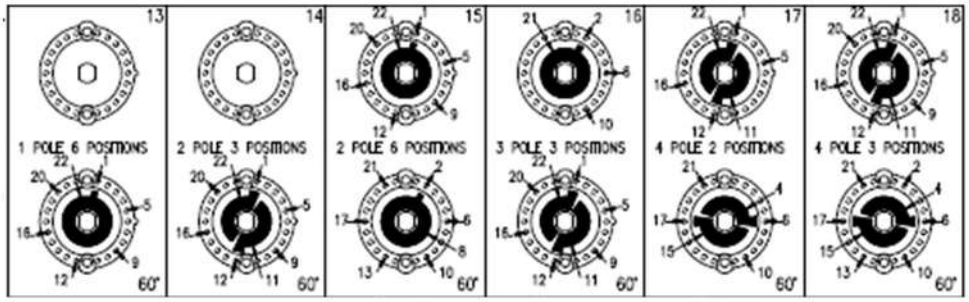

90° WAFER LAYOUTS

FRONT

REAR
viewed
from front

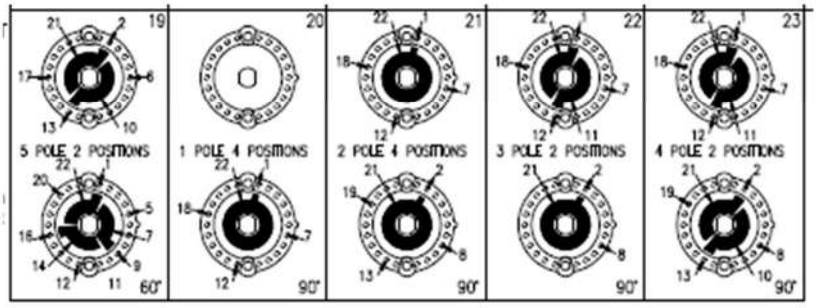

FRONT AND REAR WAFERS VIEWED FROM FRONT OF SWITCH IN FURTHEST COUNTER CLOCKWISE POSITION

PRINTED CIRCUIT TERMINAL TYPES

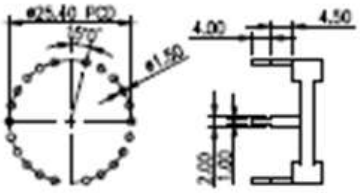

SELF STACKING Ø28 + Ø36 ONLY

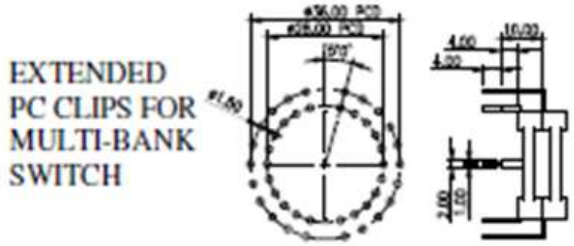

RA ORDERING CODE

Nb. Standard spindles are unflattened x 50mm FMF (from mounting face) This includes the length of the 8mm bush. Popular Non-Standard Spindles (unflattened) are 14mm, 16mm, 18mm, 20mm, 22mm and 24mm FMF

CODE	TERMINAL
S	Solder Clips
A	25.4mmØ
B	28.0mmØ
C	36.0mmØ

CODE	CONTACT PLATING
S	Silver (2µ)
G	Gold Plate (Au 2.5 µ, Ni 2 µ)
F	Gold Flash (0.2 µ)

CODE	SPINDLE/ BUSH
M	6mmØ M10 x 0.75
I	6.35mmØ 9.52 x 32TPI

R A ☐☐ ☐ ☐☐ ☐☐☐ ☐☐☐☐

CODE	No. of Wafers
01	1 wafer
02	2 wafer
03	3 wafer
04	4 wafer
05	5 wafer
06	6 wafer
07	7 wafer
08	8 wafer
09	9 wafer
10	10 wafer

CODE	INDEX ANGLE & No of POLES	
A	30º	1 Pole
B	30º	2
C	30º	3
D	30º	4
E	30º	5
F	30º	6
G	45º	1
H	45º	2
K	45º	3

CODE	INDEX ANGLE & No of POLES	
L	45º	4 Pole
M	60º	1
N	60º	2
P	60º	3
R	60º	4
S	60º	5
T	90º	1
W	90º	2
X	90º	3
Y	90º	4

CODE	MAXIMUM No. of POSITIONS
01	1
02	2
03	3
04	4
05	5
06	6
07	7
08	8
09	9
10	10
11	11
12	12
00	No Stop

CODE	CIRCUITRY
B	BBM
M	MBB

CODE	Spindle Length from Mounting face (including bush length)	
A	14mm	No Flat
B	16	No Flat
C	18	No Flat
D	20	No Flat
E	22	No Flat
F	24	No Flat
G	50	0º/42mm
H	50	90º/42mm
K	50	180º/42mm
L	50	270º/42mm
S	50	No Flat

CODE	SPECIAL OPTIONS Mains Switch
O	None
N	OFF/ON Mains switch

CODE	WAFER SPACING
X	Self Stacked
H	3mm
J	6mm
K	8mm
L	10mm