E21237

Mounting set for position sensors

CLAMP AND BRACKET

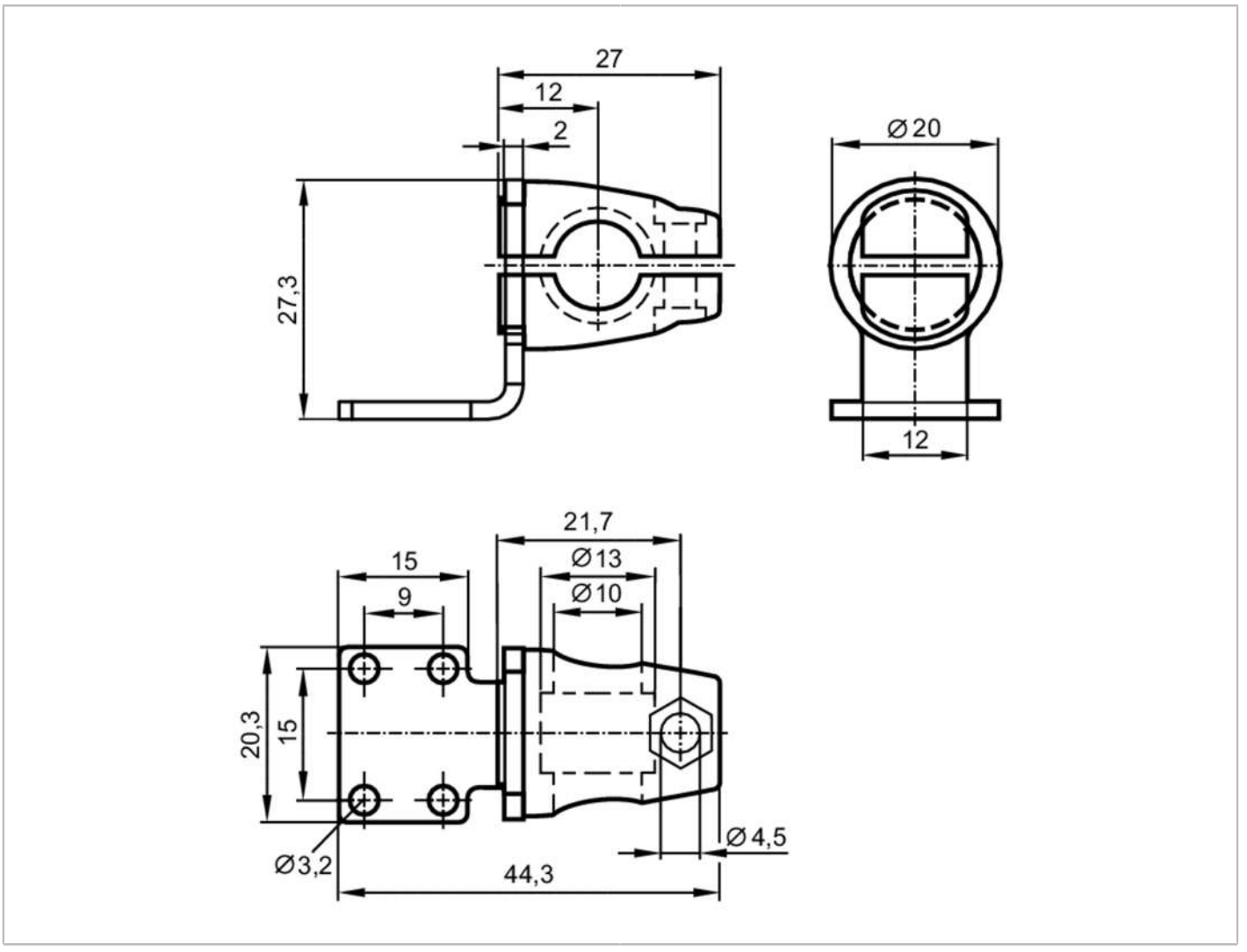

Application		
Design		clamp mounting
Mechanical data		
Weight	[g]	47
Type of mounting		Mounting rod; (Ø 10 mm)
Dimensions	[mm]	27.3 x 20 x 44.3
Materials		fixture: stainless steel; Clamp: stainless steel; screw: stainless steel; nut: stainless steel
Accessories		
Items supplied		head cap screw: 1 x M4 x 12
		nut: M4
Remarks		
Pack quantity		1 pcs.