Features/Benefits

- *Small footprint*
- *4 actuation forces*
- *Excellent tactile feel*
- *Ultra low current capabilities*
- *IP40*

Typical Applications

- *Automotive*
- *Industrial electronics*
- *Medical equipment*



Specification

FUNCTION: momentary action
CONTACT ARRANGEMENT: 1 make contact = SPST, N.O.
TERMINALS: Gullwing type for SMT

Mechanical

Type G and NG See description below	Operating force N (grs)	Operating life (cycles)	Travel (mm)
KMR411 LFS	1.2 (120) ± 0.30	100,000	0.20 mm ± 0.1
KMR411 ULC LFS	1.2 (120) ± 0.30	100,000	0.20 mm ± 0.1
KMR413 LFG	1.2 (120) ± 0.30	100,000	0.20 mm ± 0.1
KMR413 ULC LFG	1.2 (120) ± 0.30	100,000	0.20 mm ± 0.1
KMR421 LFS	2.0 (200) ± 0.50	100,000	0.25 mm ± 0.1
KMR421 ULC LFS	2.0 (200) ± 0.50	100,000	0.25 mm ± 0.1
KMR423 LFG	2.0 (200) ± 0.50	100,000	0.25 mm ± 0.1
KMR423 ULC LFG	2.0 (200) ± 0.50	100,000	0.25 mm ± 0.1
KMR431 LFS	3.0 (300) ± 0.75	100,000	0.25 mm ± 0.1
KMR431 ULC LFS	3.0 (300) ± 0.75	100,000	0.25 mm ± 0.1
KMR432 LFS	3.0 (300) ± 0.75	300,000	0.25 mm ± 0.1
KMR432ULC LFS	3.0 (300) ± 0.75	300,000	0.25 mm ± 0.1
KMR433 LFG	3.0 (300) ± 0.75	100,000	0.25 mm ± 0.1
KMR433ULC LFG	3.0 (300) ± 0.75	100,000	0.25 mm ± 0.1
KMR441 LFS	4.0 (400) ± 1.00	100,000	0.30 mm ± 0.1
KMR441 ULC LFS	4.0 (400) ± 1.00	100,000	0.30 mm ± 0.1
KMR442 LFS	4.0 (400) ± 1.00	200,000	0.30 mm ± 0.1
KMR442 ULC LFS	4.0 (400) ± 1.00	200,000	0.30 mm ± 0.1
KMR443 LFG	4.0 (400) ± 1.00	100,000	0.30 mm ± 0.1
KMR443 ULC LFG	4.0 (400) ± 1.00	100,000	0.30 mm ± 0.1

TACTILE FEELING: KMR 4 series with actuation force in 2N - 3N - 4N: ≥ 25%
KMR 4 series with actuation force in 1.2N: ≥ 20%

Electrical

	Silver	Gold
MAXIMUM POWER:	1 VA	0.2 VA
MAXIMUM VOLTAGE:	32 VDC	32 VDC
MINIMUM VOLTAGE:	20 mVDC	20 mVDC
MAXIMUM CURRENT:	50 mA	10 mA
MINIMUM CURRENT:	1 mA*	1 mA*
DIELECTRIC STRENGTH:	≥ 250 Vrms	
CONTACT RESISTANCE:	≤ 100 mΩ	
INSULATION RESISTANCE:	≥ 1GΩ	
BOUNCE TIME:	≤ 3 ms	

*For ULC version minimum current is 1µA at 1.8 VDC

Environmental

	Silver	Gold
OPERATING TEMPERATURE:	-40°C to 85°C	-40°C to 125°C
STORAGE TEMPERATURE:	-55°C to 85°C	-55°C to 125°C

Process

Soldering: Lead free reflow soldering process in accordance with IEC 61760-1.

Packaging

In reels of 6,000 pieces
External diameter 330 mm ± 2 mm

NOTE: Specifications listed above are for switches with standard options.
For information on specific and custom switches, consult Customer Service Center.

Part Number Description

For any part number different from those listed above, please consult your local representative.

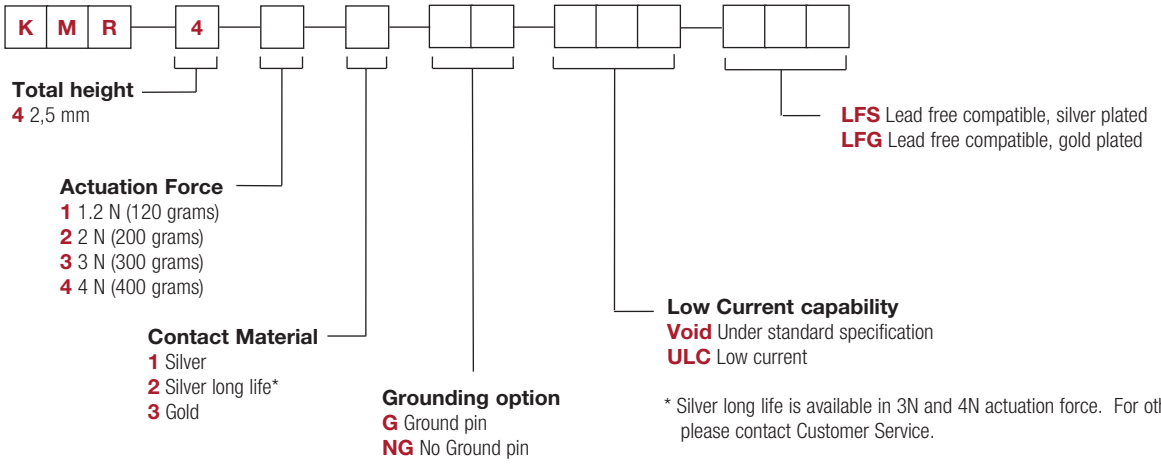

* Silver long life is available in 3N and 4N actuation force. For other versions, please contact Customer Service.

KMR 4 Series - 2.5 mm height

PCB layout shown with ground pin option

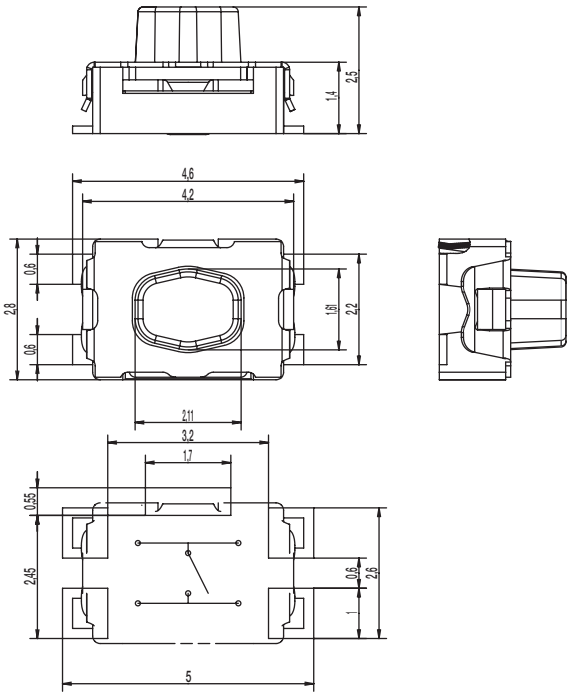

TAPE & REEL

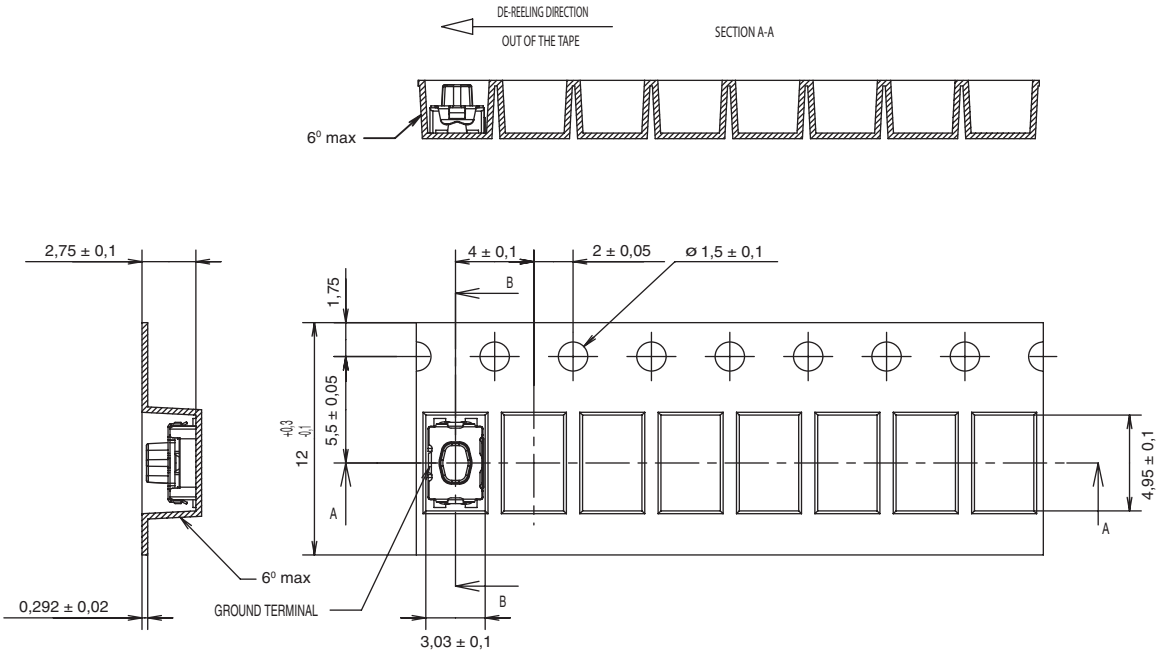

First Angle Projection

Dimensions are shown: mm
Specifications and dimensions subject to change