E12401

Connecting cable with socket

ADOGH080VAS0040E08

For 8-pole sockets the core colours are not standardised.
Please note the wiring of the sensor and the sockets (see data sheet).

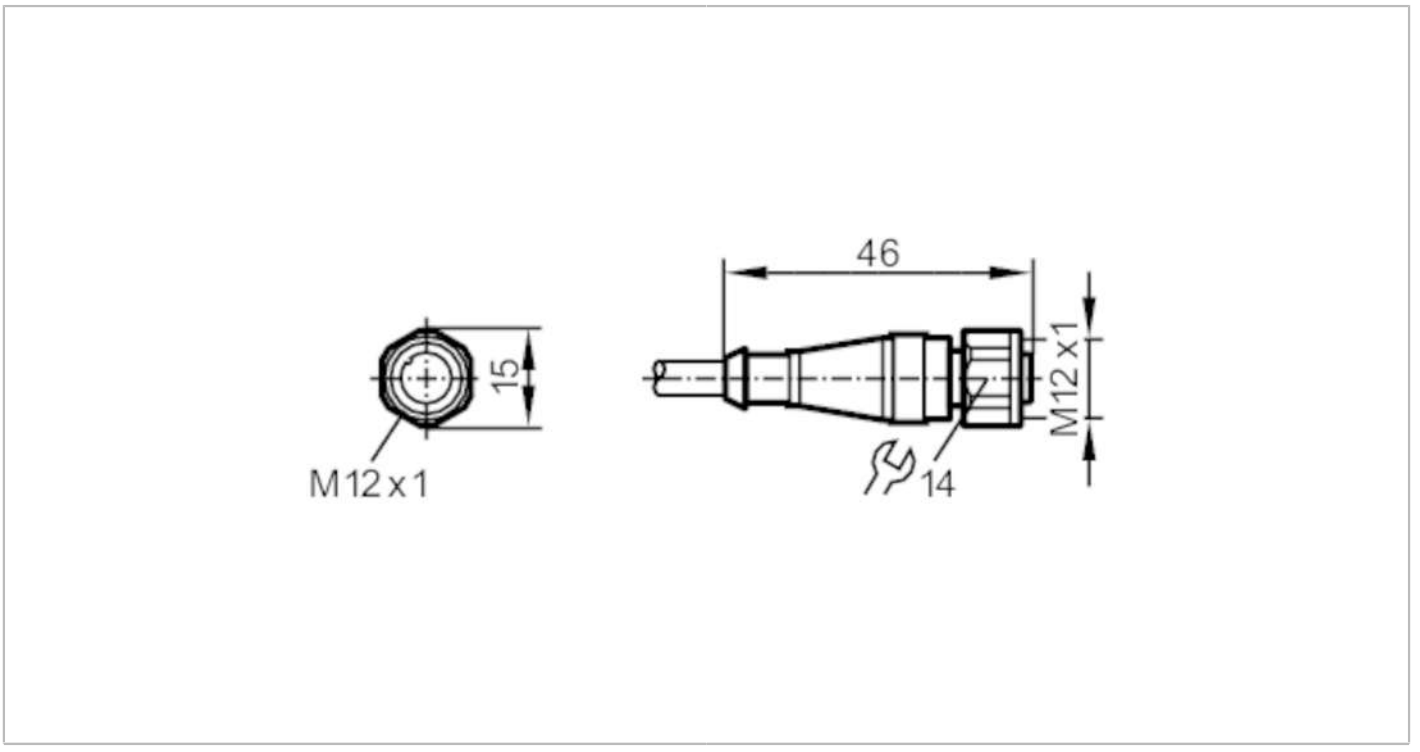

Application		
Special feature		Free from silicone; Gold-plated contacts
Free from silicone		yes
Electrical data		
Operating voltage	[V]	< 30 AC / < 36 DC
Max. current load total	[A]	2
Operating conditions		
Ambient temperature	[°C]	-25...100
Protection		IP 68; IP 69K
Mechanical data		
Weight	[g]	2573
Dimensions	[mm]	15 x 15 x 46
Materials		PVC
Moulded-body material		PVC
Material nut		stainless steel (1.4404 / 316L)
Remarks		
Pack quantity		1 pcs.

E12401

Connecting cable with socket

ADOGH080VAS0040E08

Electrical connection

Cable: 40 m, PVC, orange, Ø 5.9 mm; 8 x 0.25 mm² (32 x Ø 0.1 mm)

Electrical connection - socket

Connector: 1 x M12, straight; coding: A; Moulded body: PVC; Locking: stainless steel (1.4404 / 316L); Contacts: gold-plated; Tightening torque: 0.7...0.9 Nm



Connection

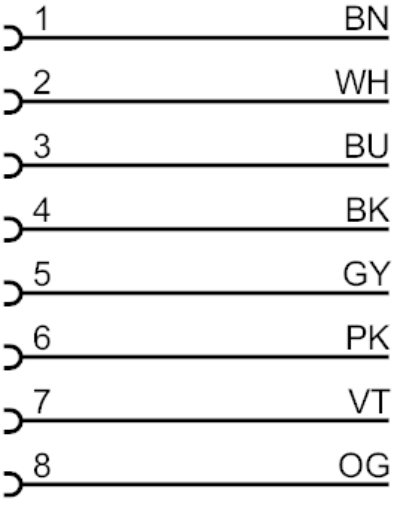

colours to DIN EN 60947-5-2	Core colours :
BK =	black
BN =	brown
BU =	blue
GY =	grey
PK =	pink
OG =	orange
VT =	lilac
WH =	white