THERMASGARD® RTM 1

Room temperature measuring transducers, calibratable, with multi-range switching and active output (Automatic Output Switching)

NEW

S+S REGELTECHNIK

Patented quality product (patent no. DE 10 2015 015 941 B4)

Calibratable room temperature measuring transducer **THERM**ASGARD® **RTM 1**, with eight switchable measuring ranges (max. –20...+150 °C), active output, in an elegant housing made of plastic, with snap-on lid, base with 4-hole attachment for installation on vertically or horizontally installed in-wall flush boxes, with predetermined breaking point for on-wall cable entry. Optionally available as a design with vandal-proof housing made of stainless steel (top and base screwed together).

The measuring transducer converts the measured variables into a standard signal of 0-10 V or 4...20 mA. The unit with **Automatic Output Switching** (AOS) detects the required output type and automatically switches to U or I output. Alternatively, a **type version** (2-wire) with 2-wire connection and I output is available.

This room temperature sensor is used to detec temperatures in closed dry rooms such as flats, in offices and business facilities. The sensor is factory-calibrated; an environmental precision adjustment by an expert is possible.

TECHNICAL DATA

RTM 1 - I	
Power supply:	15...36 V DC, depending on working resistance, residual ripple stabilised ± 0.3 V
Working resistance:	R_a (Ohm) = (U_b -14 V) / 0.02 A
Connection type:	2-wire connection
Output:	**4...20 mA**
RTM 1 - A (**AOS**)	
Power supply:	24 V AC / DC (± 10 %)
Load resistance:	R_L = 25...450 Ohm with AOS I variant R_L > 15 kOhm with AOS U variant
Connection type:	3-wire connection
Output:	**automatic 0-10 V / 4...20 mA** (via **Automatic Output Switching** – the unit detects the required output type and automatically switches to U or I output)
GENERAL	
Power consumption:	< 1,0 W / 24 V DC; < 2.2 VA / 24 V AC
Measuring ranges:	**multi-range switching with 8 measuring ranges** see table (other ranges optional) **with manual zero point correction (± 10 K)**
Sensor:	Pt1000, DIN EN 60751, class B
Deviation, temperature:	typically ± 0.2 K at +25 °C
Housing:	plastic, material ABS, colour pure white (similar to RAL 9010), optional stainless steel **V2A** (1.4301)
Housing dimensions:	85 x 85 x 27 mm (Baldur 1) 75 x 75 x 25 mm (stainless steel)
Electrical connection:	0.14 - 1.5 mm², via terminal screws on circuit board
Installation:	wall mounting or on in-wall flush box Ø 55 mm, base with 4-hole for mounting on vertically or horizontally installed in-wall flush boxes for cable entry from the back, with predetermined breaking point for on-wall cable entry from top/bottom in case of plain on-wall installation
Ambient temperature:	measuring transducer –30...+70 °C
Permitted humidity:	< 95 % RH, non-precipitating air
Protection class:	III (according to EN 60 730)
Protection type:	**IP 30** (according to EN 60 529)
Standards:	CE conformity, electromagnetic compatibility according to EN 61326, according to EMC directive 2014 / 30 / EU

Load resistance diagram (2-wire) **RTM xx - I**

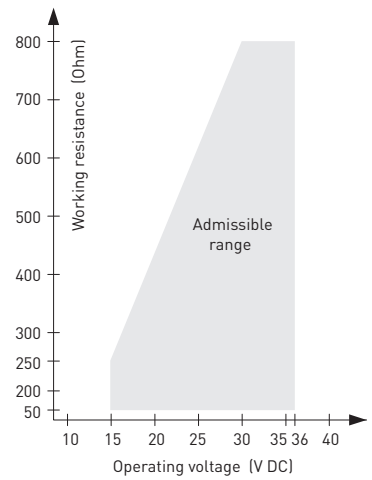

Schematic diagram without display **RTM 1**

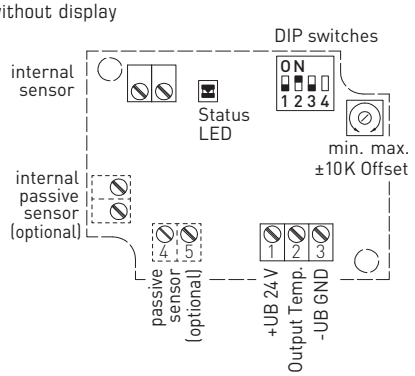

2-wire without display **RTM 1 - I**

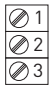

+UB 24V DC
Output Temp. 4...20mA
free

3-wire (AOS) without display **RTM 1 - A**

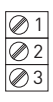

+UB 24V AC/DC
Output Temp. 0-10V / 4...20mA
–UB GND

Measuring ranges [°C] (adjustable)	DIP 1	DIP 2	DIP 3
–20...+ 150 °C	**ON**	**ON**	**ON**
–50... + 50 °C	OFF	**ON**	**ON**
–20... + 80 °C	**ON**	OFF	**ON**
–30... + 60 °C	OFF	OFF	**ON**
0... + 40 °C	**ON**	**ON**	OFF
0... + 50 °C (default)	OFF	**ON**	OFF
0...+ 100 °C	**ON**	OFF	OFF
0...+ 150 °C	OFF	OFF	OFF

DIP4 has no function!

For further technical information, see the operating instructions

Room temperature measuring transducers, calibratable, with multi-range switching and active output (Automatic Output Switching)

Dimensional drawing
[mm]

Housing **Baldur 1**

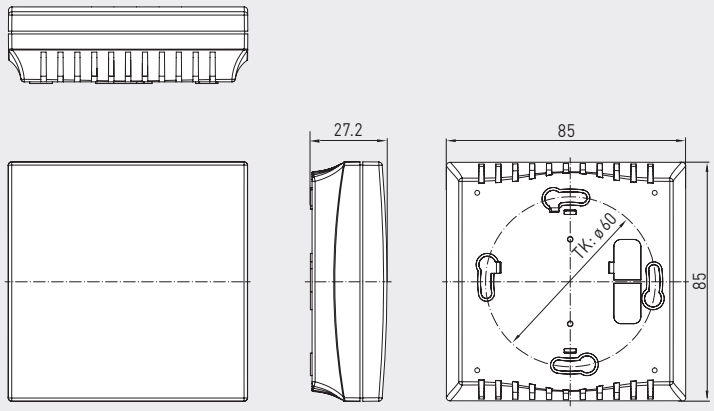

RTM 1
without display
(Baldur 1)



Dimensional drawing
[mm]

Housing **stainless steel**

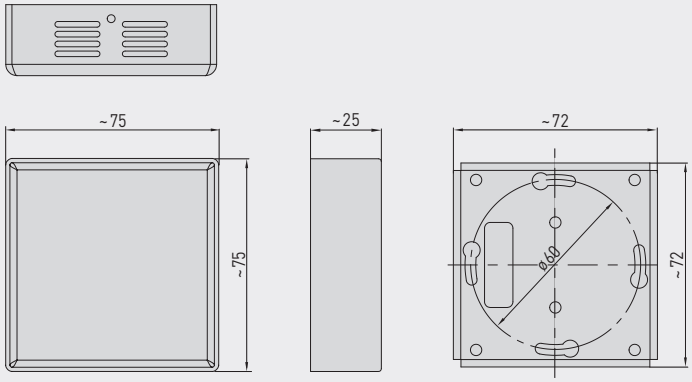

RTM 1
without display
(stainless steel)



Automatic detection and switching
to standard signal 0...10 V or 4...20 mA

AOS-PATENTED
AUTOMATIC OUTPUT SWITCHING

THERMASGARD® **RTM 1**	Room temperature measuring transducers with multi-range switching (without display)			
Type / WG01	**Output**	**Features**	**Item No.**	**Price**
RTM1-I	**(2-wire)**			
RTM1-I	4...20 mA	–	1101-41A2-0000-200	**78,89 €**
RTM1-I VA	4...20 mA	Stainless steel housing **V2A** (1.4301)	1101-4152-0000-200	**205,23 €**
RTM1-A	**(3-wire AOS)**			
RTM1-A	0-10 V / 4...20 mA	–	1101-41AE-0000-200	**78,89 €**
RTM1-A VA	0-10 V / 4...20 mA	Stainless steel housing **V2A** (1.4301)	1101-415E-0000-200	**205,23 €**
Automatic Output Switching:	patented analogueinterface (patent no. DE 10 2015 015 941 B4) Unit automatically detects the required output type 0-10 V or 4...20 mA.			
Measuring range:	**multi-range switching** with 8 switchable measuring ranges (see DIP table) 0...+50 °C (default), max. –20...+150 °C			
Extra charge:	other measuring ranges optional additional passive sensor (pin 4/5) optionally upon request			**26,16 €**
Note:	for units **with display** and/or potentiometer, see the following pages			

THERMASGARD® RTM xx

Room temperature measuring transducers, calibratable, with display and / or potentiometer and active output (Automatic Output Switching)

NEW

S+S REGELTECHNIK

Patented quality product (patent no. DE 10 2015 015 941 B4)

Calibratable room temperature measuring transducer **THERM**ASGARD® **RTM xx** with active output, temperature range (0...+50 °C), in an elegant housing made of plastic, with snap-on lid, base with 4-hole attachment for installation on vertically or horizontally installed in-wall flush boxes, with predetermined breaking point for on-wall cable entry, optionally with potentiometer and/or display. The standard display can be changed from SI [°C] to imperial [°F] units via DIP switch.

The measuring transducer converts the measured variables into a standard signal of 0 - 10 V or 4...20 mA. The unit with **Automatic Output Switching** (AOS) detects the required output type and automatically switches to U or I output. Alternatively, a **type version** (2-wire I) with 2-wire connection and I output is available.

This room temperature sensor is used to detec temperatures in closed dry rooms such as flats, in offices and business facilities. The sensor is factory-calibrated; an environmental precision adjustment by an expert is possible.

RTM xx
without potentiometer,
with display



SI IMP

TECHNICAL DATA

RTM - I	
Power supply:	15...36 V DC, depending on working resistance, residual ripple stabilised ± 0.3 V
Working resistance:	R_a (Ohm) = (U_b -14 V) / 0.02 A
Connection type:	2-wire connection
Output:	**4...20 mA**
RTM - A (AOS)	
Power supply:	24 V AC / DC (± 10 %)
Load resistance:	R_L = 25...450 Ohm for AOS I variant R_L > 15 kOhm for AOS U variant
Connection type:	3-wire connection
Output:	**automatic 0-10 V / 4...20 mA** (via **Automatic Output Switching** – the unit detects the required output type and automatically switches to U or I output)
GENERAL	
Power consumption:	< 1.0 W / 24 V DC; < 2.2 VA / 24 V AC
System of units:	**SI** (default) or **Imperial** (switchable via DIP switch)
Data points:	Temperature [°C] [°F]
Measuring ranges:	**0...+50 °C** (other ranges optional) **with manual zero point correction (± 10 K)**
Sensor:	digital temperature sensor
Deviation, temperature:	typically ± 0.2 K at +25 °C
Housing:	plastic, material ABS, colour pure white (similar to RAL 9010)
Housing dimensions:	85 x 85 x 27 mm (Baldur 1)
Electrical connection:	0.14 - 1.5 mm², via terminal screws
Installation:	wall mounting or on in-wall flush box Ø 55 mm, base with 4-hole for mounting on vertically or horizontally installed in-wall flush boxes for cable entry from the back, with predetermined breaking point for on-wall cable entry from top/bottom in case of plain on-wall installation
Ambient temperature:	measuring transducer –30...+70 °C
Permitted humidity:	< 95 % RH, non-precipitating air
Protection class:	III (according to EN 60 730)
Protection type:	**IP 30** (according to EN 60 529)
Standards:	CE conformity, electromagnetic compatibility according to EN 61326, according to EMC directive 2014 / 30 / EU
Control element:	**potentiometer**, with angle of rotation limiter, the standard marking is a swelling arrow with centre position, unfilled (others upon request)
Optional:	Two-line **display with illumination**, cutout 36 x 15 mm (W x H), for displaying the **ACTUAL temperature** and the **internal diagnostics** (sensor breakage, sensor short circuit)

Display and internal diagnostics
THERMASGARD®
Measuring transducer with display



Dimensional drawing [mm]

Housing **Baldur 1**

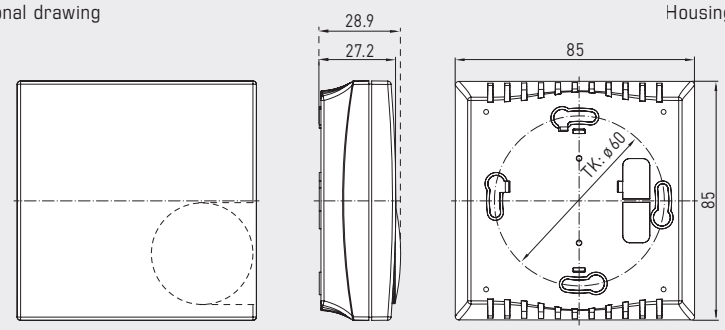

Display (switchable)		DIP 1
Imperial	[°F]	**ON**
SI (default)	[°C]	OFF

Display
Temperature [°C] → [°F]
The display value depends on the set unit system (**DIP 1**).

For further technical information, see the operating instructions

S+S REGELTECHNIK

NEW

Room temperature measuring transducers, calibratable, with display and / or potentiometer and active output (Automatic Output Switching)

Schematic diagram without potentiometer **RTM xx**

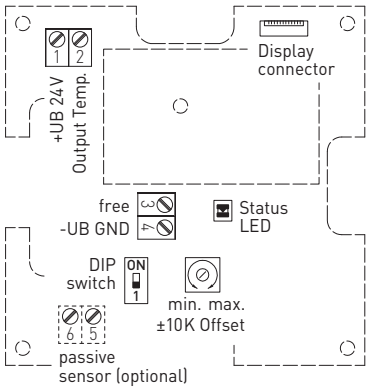

Schematic diagram **with potentiometer** **RTM xx P**

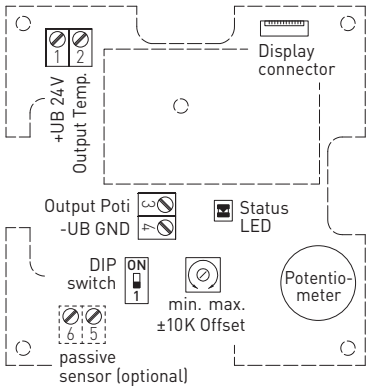

RTM xx
with Potentiometer,
with/without display



SI IMP



Automatic detection and switching to standard signal 0...10 V or 4...20 mA

AOS-PATENTED
AUTOMATIC OUTPUT SWITCHING

2-wire* **RTM-I LCD**
without potentiometer,
with display

1 +UB 24V DC
2 Output Temp. 4...20mA

3 free
4 –UB GND (optional for backlighting)

* 2-wire connection for devices with display (not illuminated)
3-wire connection for devices with illuminated display

4-wire (AOS) **RTM-A P** **RTM-A P LCD**
with potentiometer,
with/without display

1 +UB 24V AC/DC
2 Output Temp. 0-10V / 4...20mA

3 Output Poti 0-10V / 4...20mA
4 –UB GND

3-wire (AOS) **RTM-A LCD**
without potentiometer,
with display

1 +UB 24V AC/DC
2 Output Temp. 0-10V / 4...20mA

3 free
4 –UB GND

6-wire (AOS) **RTM-A P Pt1000**
with potentiometer,
with passive sensor

1 +UB 24V AC/DC
2 Output Temp. 0-10V / 4...20mA

3 Output Poti 0-10V / 4...20mA
4 –UB GND

5
6 Rx passive sensor (optional)

THERMASGARD® RTM xx Room temperature measuring transducers (with display and/or potentiometer)

Type / WG01	Output Temperature active	Output Temperature passive	Output Potentiometer active	Poti	Display	Item No.	Price
RTM-I	**(2-wire)**						
RTM-I **LCD**	4...20 mA	(optional)	–		■	1101-41A2-2000-200	**124,43 €**
RTM-A	**(AOS)**						
RTM-A **LCD**	0-10 V / 4...20 mA	(optional)	–		■	1101-41AE-2000-200	**124,43 €**
RTM-A **P LCD**	0-10 V / 4...20 mA	(optional)	0-10 V / 4...20 mA	●	■	1101-41AE-2004-346	**256,09 €**
RTM-A **P**	0-10 V / 4...20 mA	(optional)	0-10 V / 4...20 mA	●		1101-41AE-0004-346	**151,19 €**
RTM-A **P Pt1000**	0-10 V / 4...20 mA	**Pt1000**	0-10 V / 4...20 mA	●		1101-41AE-0054-346	**158,54 €**
Automatic Output Switching:	patented analogueinterface (patent no. DE 10 2015 015 941 B4) Unit automatically detects the required output type 0-10 V or 4...20 mA.						
Measuring range:	**0...+ 50 °C** (permanently set)						
Extra charge:	other measuring ranges optional additional passive sensor (pin 5/6) optionally upon request						**26,16 €**
Potentiometer:	the standard **marking** is a swelling arrow with centre position, (– • +), unfilled optionally wedge-shaped without centre position (–...+) or with marking points (–3K ...+3K) – special print upon request						