JUMO GmbH & Co. KG
Delivery address: Mackenrodtstraße 14,
36039 Fulda, Germany
Postal address: 36035 Fulda, Germany
Phone: +49 661 6003-0
Fax: +49 661 6003-607
e-mail: mail@jumo.net
Internet: www.jumo.net

JUMO Instrument Co. Ltd.
JUMO House
Temple Bank, Riverway
Harlow, Essex CM20 2DY, UK
Phone: +44 1279 635533
Fax: +44 1279 635262
e-mail: sales@jumo.co.uk
Internet: www.jumo.co.uk

JUMO Process Control, Inc.
8 Technology Boulevard
Canastota, NY 13032, USA
Phone: 315-697-JUMO
1-800-554-JUMO
Fax: 315-697-5867
e-mail: info@jumo.us
Internet: www.jumo.us

Indoor, outdoor and channel RTD temperature probe

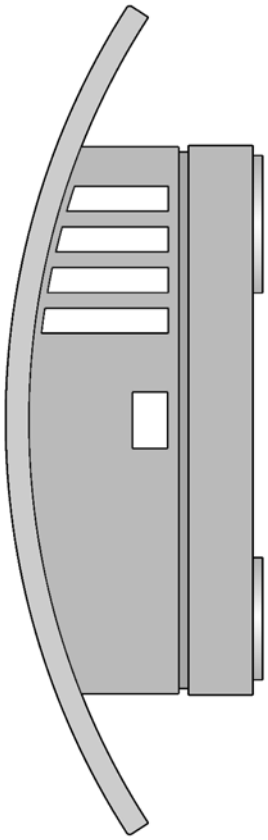

- **For temperatures from -50 ... +90 °C (200 °C)**
- **For application in the air conditioning technology**
- **Protection class IP20 to IP65**
- **Connection: in 2-wire, 3-wire or 4-wire circuit**
- **Available with 4 ... 20 mA or 0 ... 10 V transmitter**

Indoor, outdoor and channel RTD temperature probes for air conditioning technology are mainly used for temperature measurement in rooms, in air channels and outdoors.

Various device versions made of plastic with different protection classes are available for the respective measuring task.

The measuring insert is normally fitted with a Pt 100 temperature probe as per DIN EN 60751, Class B in 2-wire circuit, versions with Pt500, Pt1000 or Ni1000 can also be supplied. From the connection terminals, wiring in 3-wire and 4-wire circuit is also possible.
A transmitter can be optionally integrated.

Technical Data

Connection case	Plastic case PC (basic type 902520/11 material PP), IP20 to IP65, basic type 902524/25 protection class IP54 and IP65
Sheath	Stainless steel 1.4571; Ø 5.4 mm, Ø 6 mm
Measuring insert	Pt100 temperature probe, DIN EN 60751, class B, 2-wire circuit Pt1000 temperature probe, DIN EN 60751, class B, 2-wire circuit, For further probes, refer to the order details
Transmitter	Analog transmitters, output signal 4 ... 20 mA or 0 ... 10 V

JUMO GmbH & Co. KG
Delivery address: Mackenrodtstraße 14, 36039 Fulda, Germany
Postal address: 36035 Fulda, Germany
Phone: +49 661 6003-0
Fax: +49 661 6003-607
e-mail: mail@jumo.net
Internet: www.jumo.net

JUMO Instrument Co. Ltd.
JUMO House
Temple Bank, Riverway
Harlow, Essex CM20 2DY, UK
Phone: +44 1279 635533
Fax: +44 1279 635262
e-mail: sales@jumo.co.uk
Internet: www.jumo.co.uk

JUMO Process Control, Inc.
8 Technology Boulevard
Canastota, NY 13032, USA
Phone: 315-697-JUMO
1-800-554-JUMO
Fax: 315-697-5867
e-mail: info@jumo.us
Internet: www.jumo.us

Transmitter		**Output 4 ... 20 mA**	**Output 0 ... 10 V**
	Input		
	Measuring input	Pt100 (DIN EN 60751)	
	Probe current	≤ 0.5 mA	
	Measuring range	Permanent measurement due to analog signal path	
	Measuring circuit monitoring		
	Underrange	dropping to ≤ 3.6 mA	0 V
	Overrange	increasing to ÷ 22 mA ... < 28 mA (typical 24 mA)	increasing to ÷ 11 V ... < 14 V (typical 12 V)
	Probe short-circuit	≤ 3.6 mA	0 V
	Probe and wire break	÷ 22 mA ... < 28 mA (typical 24 mA)	÷ 11 V ... < 14 V (typical 12 V)
	Output		
	Output signal	load-independent direct current 4 ... 20 mA	Direct current 0 ... 10 V
	Transmission behavior	temperature linear	
	Transmission accuracy	≤ ± 0.1 %	≤ ± 0.2 %
	Damping of the residual ripple of a voltage supply of 24 V, amplitude 10 V/50 Hz, burden 470 Ω/Load 10MΩ	37 dB	40 dB
	Burden (Rb)	Rb = (Ub - 7.5 V) / 22 mA	-
	Burden influence	≤ ± 0.02 % / 100 Ω[1]	-
	Load/load influence	-	÷ 10 kΩ / ≤ ± 0.1 %
	Setting time for temperature changes	≤ 10 ms	
	Adjustment conditions	DC 24 V / approx. 22 °C	
	Calibration accuracy	≤ ± 0.2 %[1,2] or ≤ ± 0.2 K	
	Overall accuracy, probe/calibration	± 0.4 K (typical) at 20 °C / 24 V voltage supply	
	Voltage supply		
	Voltage supply (Ub)	DC 7.5 ... 30 V	DC 15 ... 30 V
	Reverse voltage protection	yes	
	Voltage supply influence	≤ ± 0.01 %/V deviation from 24 V[1]	
	Environmental influences		
	Operating temperature range	-40 ...+ 85 °C	
	Storage temperature range	-40 ... +100 °C	
	Temperature coefficient	≤ ± 0.01 %/K deviation from 22 °C[1]	
	Ambient conditions similar to DIN EN 60654 Kl. C1	relative humidity ≤ 95 % annual average, no condensation	
	EMC Interference emission/ resistance	EN 61326 class B/Industrial requirements	

1. All specifications referring to the measuring range limit value of 20mA. 2. The higher value is valid.

Connection example with power pack, output 4 ... 20 mA

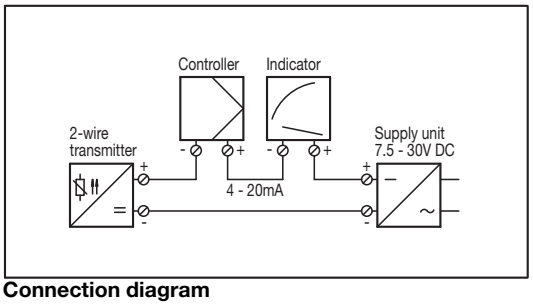

Connection example with power pack, output 0 ... 10 V

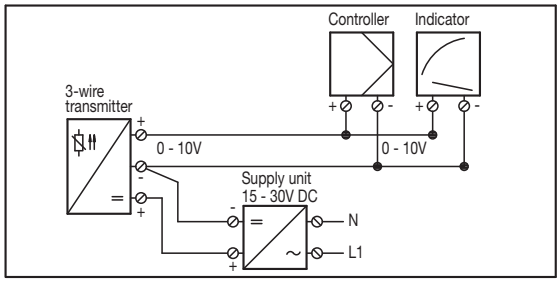

Connection diagram

Output 4 - 20mA

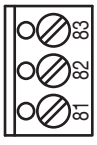

Connection for		Terminal		
Supply voltage 7.5 - 30V DC	+ 81	$R_B = \frac{U_b - 7.5V}{22mA}$	81	82
Current output 4 - 20mA	- 82	R_B = burden resistance U_b = supply voltage	+	-

Output 0 - 10V

Connection for	Terminal			
Supply voltage 15 - 30V DC	+ 81 - 82	Load ≥ 10kΩ	81	82 83
Voltage output 0 - 10V	- 82 + 83		+	- +

JUMO GmbH & Co. KG
Delivery address: Mackenrodtstraße 14,
36039 Fulda, Germany
Postal address: 36035 Fulda, Germany
Phone: +49 661 6003-0
Fax: +49 661 6003-607
e-mail: mail@jumo.net
Internet: www.jumo.net

JUMO Instrument Co. Ltd.
JUMO House
Temple Bank, Riverway
Harlow, Essex CM20 2DY, UK
Phone: +44 1279 635533
Fax: +44 1279 635262
e-mail: sales@jumo.co.uk
Internet: www.jumo.co.uk

JUMO Process Control, Inc.
8 Technology Boulevard
Canastota, NY 13032, USA
Phone: 315-697-JUMO
1-800-554-JUMO
Fax: 315-697-5867
e-mail: info@jumo.us
Internet: www.jumo.us

Dimensions

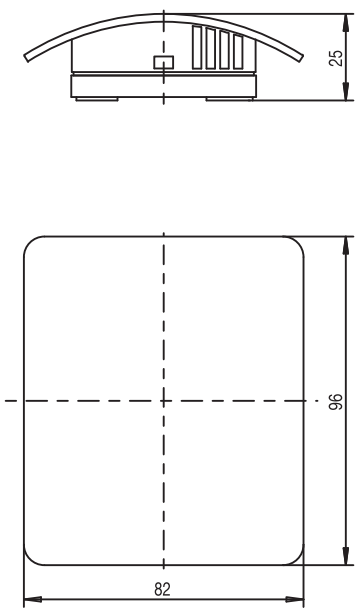

Basic type 902520/10

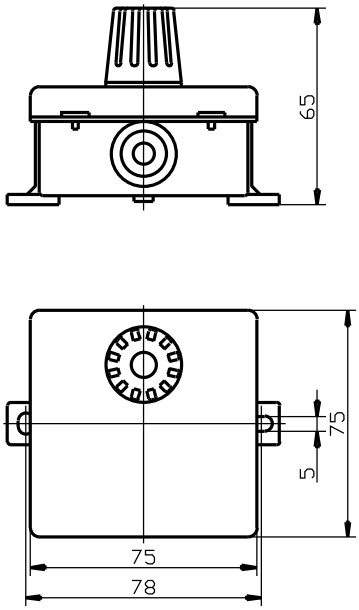

Basic type 902520/11

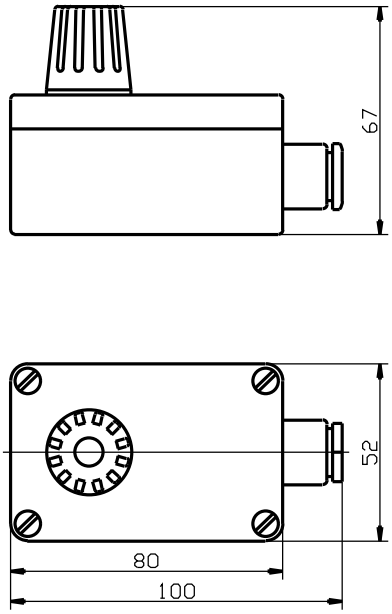

Basic type 902520/12

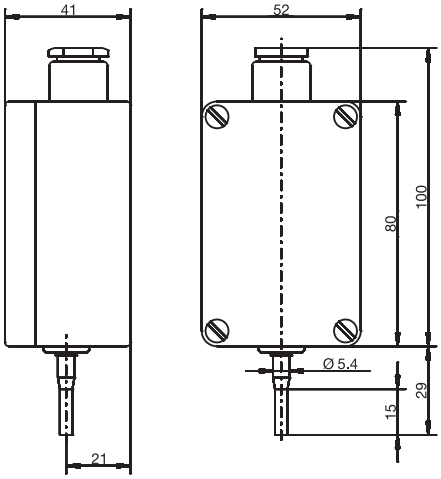

Basic type 902520/13

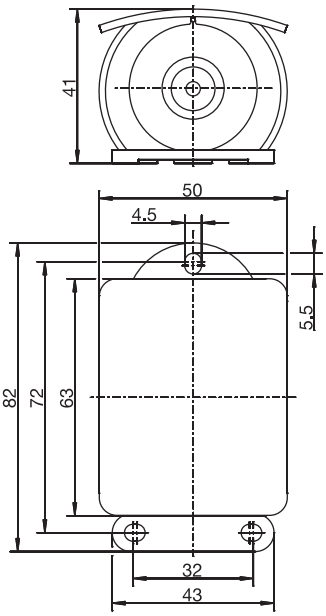

Basic type 902520/15

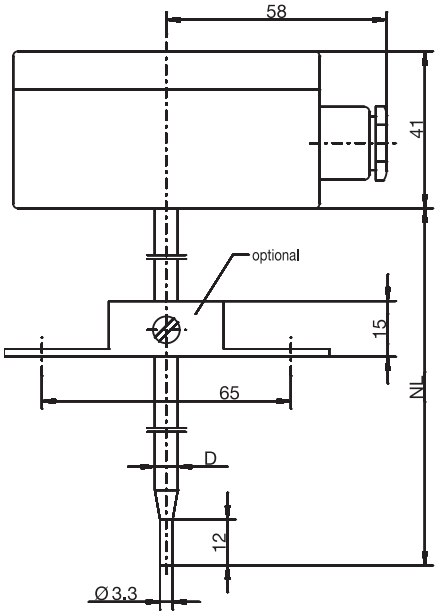

Basic type 902524/20

JUMO GmbH & Co. KG
Delivery address: Mackenrodtstraße 14,
36039 Fulda, Germany
Postal address: 36035 Fulda, Germany
Phone: +49 661 6003-0
Fax: +49 661 6003-607
e-mail: mail@jumo.net
Internet: www.jumo.net

JUMO Instrument Co. Ltd.
JUMO House
Temple Bank, Riverway
Harlow, Essex CM20 2DY, UK
Phone: +44 1279 635533
Fax: +44 1279 635262
e-mail: sales@jumo.co.uk
Internet: www.jumo.co.uk

JUMO Process Control, Inc.
8 Technology Boulevard
Canastota, NY 13032, USA
Phone: 315-697-JUMO
1-800-554-JUMO
Fax: 315-697-5867
e-mail: info@jumo.us
Internet: www.jumo.us

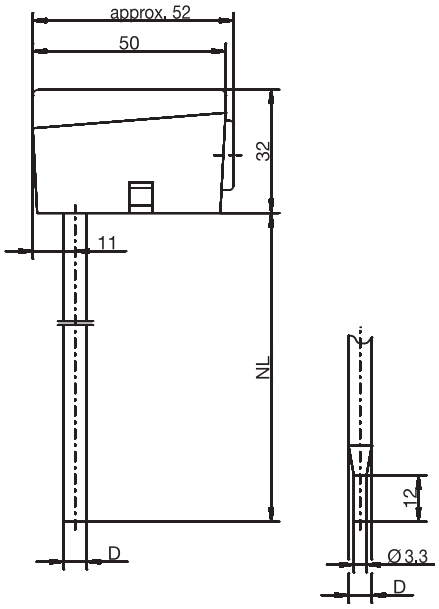

Basic type 902524/25

JUMO GmbH & Co. KG
Delivery address: Mackenrodtstraße 14, 36039 Fulda, Germany
Postal address: 36035 Fulda, Germany
Phone: +49 661 6003-0
Fax: +49 661 6003-607
e-mail: mail@jumo.net
Internet: www.jumo.net

JUMO Instrument Co. Ltd.
JUMO House
Temple Bank, Riverway
Harlow, Essex CM20 2DY, UK
Phone: +44 1279 635533
Fax: +44 1279 635262
e-mail: sales@jumo.co.uk
Internet: www.jumo.co.uk

JUMO Process Control, Inc.
8 Technology Boulevard
Canastota, NY 13032, USA
Phone: 315-697-JUMO
1-800-554-JUMO
Fax: 315-697-5867
e-mail: info@jumo.us
Internet: www.jumo.us

Order details: Indoor and outdoor RTD temperature probe

(1) Basic type

902520/10	Indoor RTD temperature probe Protection class IP20
902520/11	Indoor and outdoor RTD temperature probe Protection class IP54
902520/12	Indoor and outdoor RTD temperature probe Protection class IP65
902520/13	Indoor and outdoor RTD temperature probe with stepped sheath Protection class IP65
902520/15	Outdoor RTD temperature probe Protection class IP65

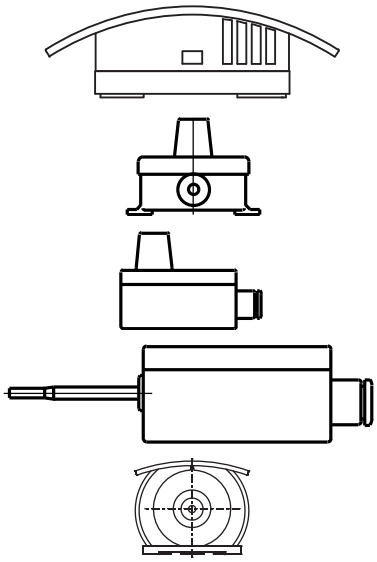

(2) Operating temperature in °C

				x	361	-50 ... +90 °C
		x	x		568	-30 ... +60 °C (measuring range only in connection with extra code 330 or 333)
x		x	x		572	-30 ... +80 °C (standard)
	x				635	-20 ... +80 °C (standard)
x		x	x		803	0 ... 40 °C (measuring range only in connection with extra code 330 or 333)
x		x	x		807	0 ... 60 °C (measuring range only in connection with extra code 330 or 333)

(3) Measuring insert

x			x		1001	1x Pt 100 in 3-wire-circuit
x	x	x	x	x	1003	1x Pt 100 in 2-wire circuit
x	x	x	x	x	1005	1x Pt1000 in 2-wire circuit
x	x		x	x	1009	1x Ni1000 in 2-wire circuit
				x	1619	1x KTY 81-110
				x	1728	1x NTC 1 kOhm
x					2001	2x Pt100 in 3-wire-circuit
	x	x	x		2003	2x Pt100 in 2-wire circuit

(4) Tolerance class as per DIN EN 60 751

				x	0	Technical data Ni/NTC/KTY
x	x	x	x	x	1	Class B (standard)
x			x	x	2	Class A (not for basic type 902520/10 in connection with transmitter)
x			x	x	3	Class AA (1/3 DIN B) (not for basic type 902520/10 in connection with transmitter)

(5) Extra codes

x	x	x	x	x	000	None
x		x	x		330	Transmitter analog, output 4 ... 20 mA[2] (in connection with 1x Pt100)
x		x	x		333	Transmitter analog, output 0 ... 10 V [2] (in connection with 1x Pt100)
				x	903	Cable screw-connection (IP65)

	(1)		(2)		(3)		(4)		(5)	
Order code		-		-		-		/		,...[1]
Order example	902520/10	-	572	-	1001	-	1	/	000	

[1] List extra codes in sequence, separated by commas.
[2] Specify measuring range in plain text.

JUMO GmbH & Co. KG
Delivery address: Mackenrodtstraße 14, 36039 Fulda, Germany
Postal address: 36035 Fulda, Germany
Phone: +49 661 6003-0
Fax: +49 661 6003-607
e-mail: mail@jumo.net
Internet: www.jumo.net

JUMO Instrument Co. Ltd.
JUMO House
Temple Bank, Riverway
Harlow, Essex CM20 2DY, UK
Phone: +44 1279 635533
Fax: +44 1279 635262
e-mail: sales@jumo.co.uk
Internet: www.jumo.co.uk

JUMO Process Control, Inc.
8 Technology Boulevard
Canastota, NY 13032, USA
Phone: 315-697-JUMO
1-800-554-JUMO
Fax: 315-697-5867
e-mail: info@jumo.us
Internet: www.jumo.us

Order details: Channel RTD temperature probe

(1) Basic type

902524/20 Channel RTD temperature probe with stepped sheath, Protection class IP65

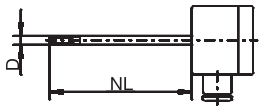

902524/25 Channel RTD temperature probe with plain sheath, Protection class IP54

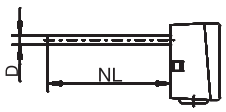

		(2)	**Operating temperature in °C**
	x	380	-50 ... +200 °C (standard)
x		568	-30 ... +60 °C (measuring range only in connection with extra code 330 or 333)
x		572	-30 ... +80 °C (standard)
x		807	0 ... 60 °C (measuring range only in connection with extra code 330 or 333)
			(3) Measuring insert
x	x	1003	1x Pt 100 in 2-wire circuit
x	x	1005	1x Pt1000 in 2-wire circuit
x	x	1009	1x Ni1000 in 2-wire circuit
x		2003	2x Pt100 in 2-wire circuit
			(4) Tolerance class as per DIN EN 60 751
x	x	1	Class B (standard)
x	x	2	Class A
x		3	Class AA (1/3 DIN B)
			(5) Sheath diameter D in mm
x	x	6	Ø 6 mm (for basic type 902524/20 Ø 6 mm stepped down to Ø 3.3 mm)
			(6) Nominal length NL in mm (NL 50 ... 500)
x	x	100	100 mm
	x	150	150 mm
	x	200	200 mm
	x	...	Please specify in plain text (50 mm steps)
			(7) Process connection
x	x	000	None
x	x	252	Sheath screw-connection G 1/4
x	x	254	Sheath screw-connection G 1/2
x	x	662	Stop flange Ø 6 mm
			(8) Extra codes
x	x	000	None
	x	310	Sheath Ø 6 mm stepped down to Ø 3.3 mm
x		330	Transmitter analog, output 4 ... 20 mA[2] (in connection with 1x Pt100)
x		333	Transmitter analog, output 0 ... 10 V[2] (in connection with 1x Pt100)
	x	404	Protection class IP65

	(1)		(2)		(3)		(4)		(5)		(6)		(7)		(8)	
Order code		-		-		-		-		-		-		/		,...[1]
Order example	902524/20	-	572	-	1003	-	1	-	6	-	100	-	252	/	000	

[1] List extra codes in sequence, separated by commas.
[2] Specify measuring range in plain text.

JUMO GmbH & Co. KG
Delivery address: Mackenrodtstraße 14,
36039 Fulda, Germany
Postal address: 36035 Fulda, Germany
Phone: +49 661 6003-0
Fax: +49 661 6003-607
e-mail: mail@jumo.net
Internet: www.jumo.net

JUMO Instrument Co. Ltd.
JUMO House
Temple Bank, Riverway
Harlow, Essex CM20 2DY, UK
Phone: +44 1279 635533
Fax: +44 1279 635262
e-mail: sales@jumo.co.uk
Internet: www.jumo.co.uk

JUMO Process Control, Inc.
8 Technology Boulevard
Canastota, NY 13032, USA
Phone: 315-697-JUMO
1-800-554-JUMO
Fax: 315-697-5867
e-mail: info@jumo.us
Internet: www.jumo.us

Stock versions

Order code	Part No.
902520/10-572-1001-1/000	90/00065671
902520/10-572-1005-1/000	90/00397862
902520/10-803-1003-1/330 (0 to 40 °C)	90/00064003
902520/10-807-1003-1/330 (0 to 60 °C)	90/00065717
902520/10-803-1003-1/333 (0 to 40 °C)	90/00439187
902520/11-635-1003-1/000	90/00055723
902520/12-572-1003-1/000	90/00064881
902520/12-572-1005-1/000	90/00350019
902520/12-807-1003-1/330 (0 to 60 °C)	90/00064883
902520/13-572-1003-1/000	90/00419733
902520/13-572-1005-1/000	90/00404301
902520/13-568-1003-1/330 (-30 to +60 °C)	90/00419736
902520/13-568-1003-1/333 (-30 to +60 °C)	90/00439195
902520/15-361-1003-1/000	90/00546799
902520/15-361-1005-1/000	90/00546802
902520/15-361-1003-1/903	90/00546800
902520/15-361-1005-1/903	90/00546801
902524/20-572-1003-1-6-100-662/000	90/00064894
902524/20-568-1003-1-6-100-662/330 (-30 to +60 °C)	90/00065087
902524/25-380-1003-1-6-100-000/310,404	90/00410556
902524/25-380-1003-1-6-150-000/310,404	90/00410562
902524/25-380-1003-1-6-200-000/310,404	90/00410563