E20756

Fibre optic diffuse reflection sensor

FT-11-EPA-Q-/F2x1/2M

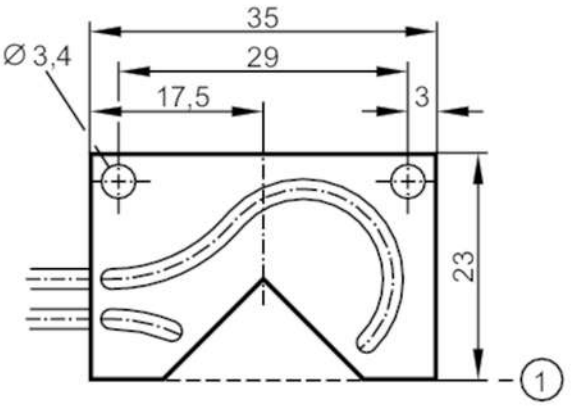

1 reference edge

Application		
Special feature		Background suppression
Function principle		Diffuse reflection sensor
Application		Small bending radius
Detection zone		
Range with fibre optic amplifier type		OB50; OBF; OCF
Background suppression available		yes
OB50		
Range fibre optics	[mm]	6
OBF		
Range fibre optics	[mm]	10
OCF (High Power)		
Range fibre optics	[mm]	20
Operating conditions		
Ambient temperature	[°C]	-40...70
Mechanical data		
Weight	[g]	54
Sensing head height	[mm]	5
Sensing head width	[mm]	35
Sensing head length	[mm]	23
Probe dimensions	[mm]	5 x 35 x 23
Total length	[mm]	2000
Min. bending radius	[mm]	10
Fibre arrangement		◉
Core diameter	[mm]	2 x 1
Fibre material		PMMA
Fibre head material		aluminium
Fibre sheath material		PE

E20756

Fibre optic diffuse reflection sensor

FT-11-EPA-Q-/F2x1/2M

Accessories	
Accessories (optional)	Cutter for fibre optics:, E20600
Remarks	
Pack quantity	1 pcs.