pressure regulator fittings (relieving type)

principle of operation

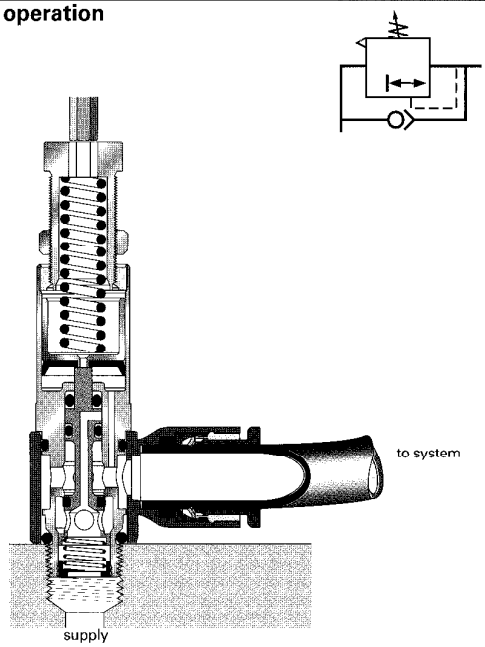

mounting on control :
valve adjustment of piston feed pressure in both directions

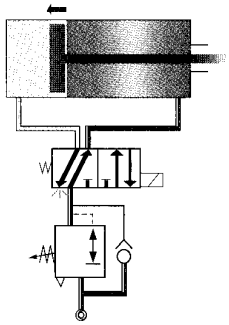

mounting on cylinder :
adjustment of piston feed pressure in single direction

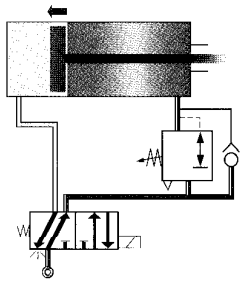

in return direction, pressure supplied through control of valve

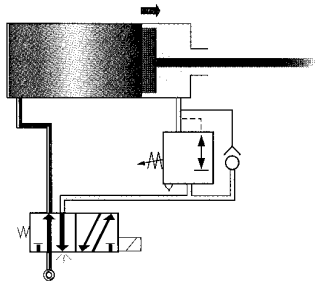

Legris pressure regulator fittings are used to stabilize at a given value the pressure applied to pneumatic equipment, whatever the fluctuations of pressure upstream.

The pressure outlet is fully controlled by an adjustment screw. To assist pressure selection, the screw is calibrated showing pressure setting levels.

Adjusting pressure to a sufficient value provides a saving of compressed air and therefore energy. Consequently, when mounted in series on a manifold, these fittings control the supply required for each piece of equipment, from a single supply source.

Compact, flow pressure regulators may be mounted :
- on the cylinder, for reduced pressure in one direction,
- on the control valve, for reduced pressure in both directions.

technical specification of pressure regulators fittings

working temperature	- 10° to + 70°C			
working pressure	**P1 – input pressure**	1 to 16 bar		
	P2 – regulated pressure	1 to 8 bar		
constituent materials	**body** : polymer H.R., nickel-plated brass			
	seals : nitrile			
maximum tightening torque	thread	G1/8"	G1/4"	G3/8"
	m. da N	0,4	0,5	0,6

pressure regulator fittings

7300 male BSP parallel, with push-in fitting engineering plastic body

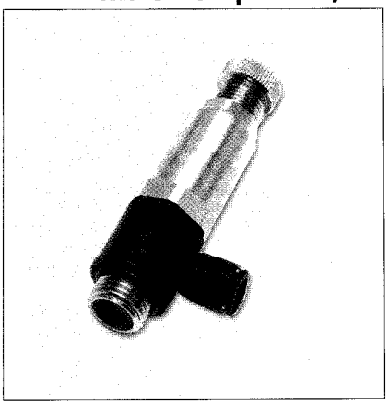

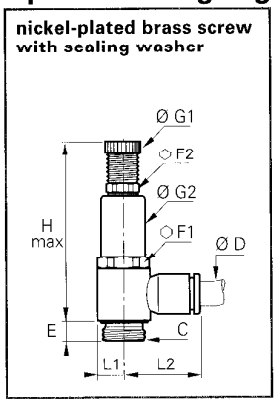

ØD	C		E	F1	F2	G1	G2	H maxi	L1	L2	kg
4	**G1/8**	**7300 04 10**	4,5	17	13	14	18,5	60,5	7	18,5	0,038
6	**G1/8**	**7300 06 10**	4,5	17	13	14	18,5	60,5	7	20	0,045
6	**G1/4**	**7300 06 13**	7,5	17	13	14	18,5	68,5	9,5	22	0,049
8	**G1/8**	**7300 08 10**	4,5	17	13	14	18,5	60,5	7	25	0,057
8	**G1/4**	**7300 08 13**	7,5	17	13	14	18,5	68,5	9,5	27	0,060
8	**G3/8**	**7300 08 17**	8,5	22	17	18,5	23,5	77,5	11,5	28,5	0,064
10	**G1/4**	**7300 10 13**	7,5	17	13	14	18,5	68,5	9,5	29	0,070
10	**G3/8**	**7300 10 17**	8,5	22	17	18,5	23,5	77,5	11,5	30,5	0,073

Identification

Part numbers have been chosen by a method of mnemonics.
Each item is identified by :

- its series
- the diameter of passage through the fitting
- by the thread or the second diameter of passage

example

7300 06 10

- **7300** : type of fitting
- **06** : O.D. of tube
- **10** : thread code or second tube O.D.