SES-MARKERS® code marker books
SM and SMR printed

SES-MARKERS®
Quality TEV

RoHS

SM - SMR

Material:	TEV vinyl covered cotton
Temperature range:	-30 to +105°C (class A) -40 to +150°C (short duration)
Operating temperature:	+10 to +40°C
Adhesive:	special rubber, thermal setting
Adhesion on steel:	2,5 N/cm
Tensile strength:	80 N/cm
Strip dimensions:	
- SM:	38 x 5 mm (for cables Ø < 12 mm)
- SMR:	32,5 x 5 mm (for cables Ø < 9,5 mm)
Strip thickness:	300 µm
Pages per book:	10
Standard colour:	white
Pack:	1 book

Particularité: 6 or 7 repeated legends are printed on each strip. The last one can be removed to mark the corresponding terminal.

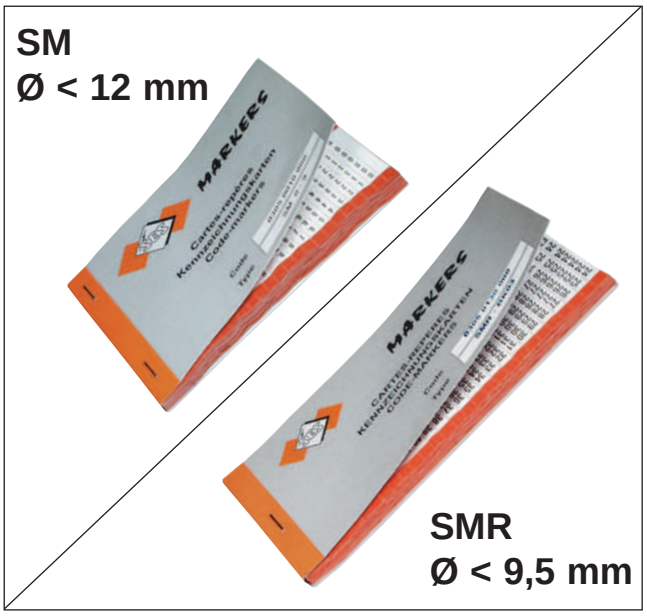

• SM booklets

type	art. no.	legend	quantity of strips per legend
SM - 0-9	0305 0010 000	0 → 9, blank	40
SM - 0-43	0305 0011 000	0 → 43	10
SM - 44-87	0305 0012 000	44 → 87	10
SM - AZ	0305 0013 000	A → Z, +, -, 0 → 15	10
SM - 1-33	0305 0014 000	1 → 33, +, -, A, B, C, R, S, T, U, V, W	10
SM - 0	0305 0015 000	0	440
SM - 1	0305 0016 000	1	440
SM - 2	0305 0017 000	2	440
SM - 3	0305 0018 000	3	440
SM - 4	0305 0019 000	4	440
SM - 5	0305 0020 000	5	440
SM - 6	0305 0021 000	6.	440
SM - 7	0305 0022 000	7	440
SM - 8	0305 0023 000	8	440
SM - 9	0305 0024 000	9.	440

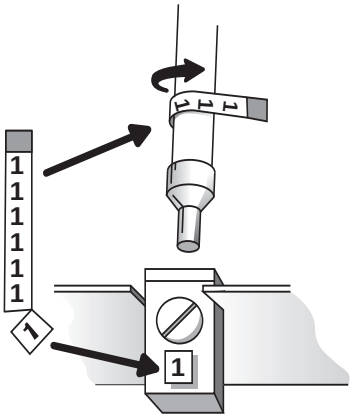

• SMR booklets

SMR - A-Z	0305 0050 000	0 → 9, A → Z, L1, L2 +, -, ~, L3	10 20
SMR - BK01	0305 0110 000	0 → 9	46
SMR - BK02	0305 0120 000	A → Z, 0 → 15, +, -, /	10
SMR - BK03	0305 0130 000	1 → 45	10
SMR - BK07	0305 0170 000	L1, L2, L3	150
SMR - BK08	0305 0180 000	1 → 15 16 → 90 A → Z, +, -, /, 0	6 4 2
SMR - BK11	0305 0210 000	1 → 30	15
SMR - BK12	0305 0220 000	A → Z +, -	15 9