TABLE 1

MOLEX P/N	ENG. NO.	LED
1202510070	BKB4030-FBC	NO
1202510071	BKB403P-FBC	YES
1202510072	BKB403N-FBC	YES

TABLE 2 BILL OF MATERIAL

ITEM	DESCRIPTION	MATERIAL	FINISH
1	LABEL	ABS	WHITE
2	SHELL	BRASS	NICKEL PLATED
3	O-RING	NBR	BLACK
4	O-RING	NBR	BLACK
5	CONTACT	BRASS	GOLD OVER NICKEL
6	CONTACT	BRASS	GOLD OVER NICKEL
7	CONTACT	BRONZE	GOLD OVER NICKEL
8	O-RING	FPM	RED
9	LED	NO LED = PA	BLACK
		WITH LED = PA	TRANSPARENT
10	SHELL	BRASS	NICKEL PLATED
11	HOUSING	PBT	BLACK

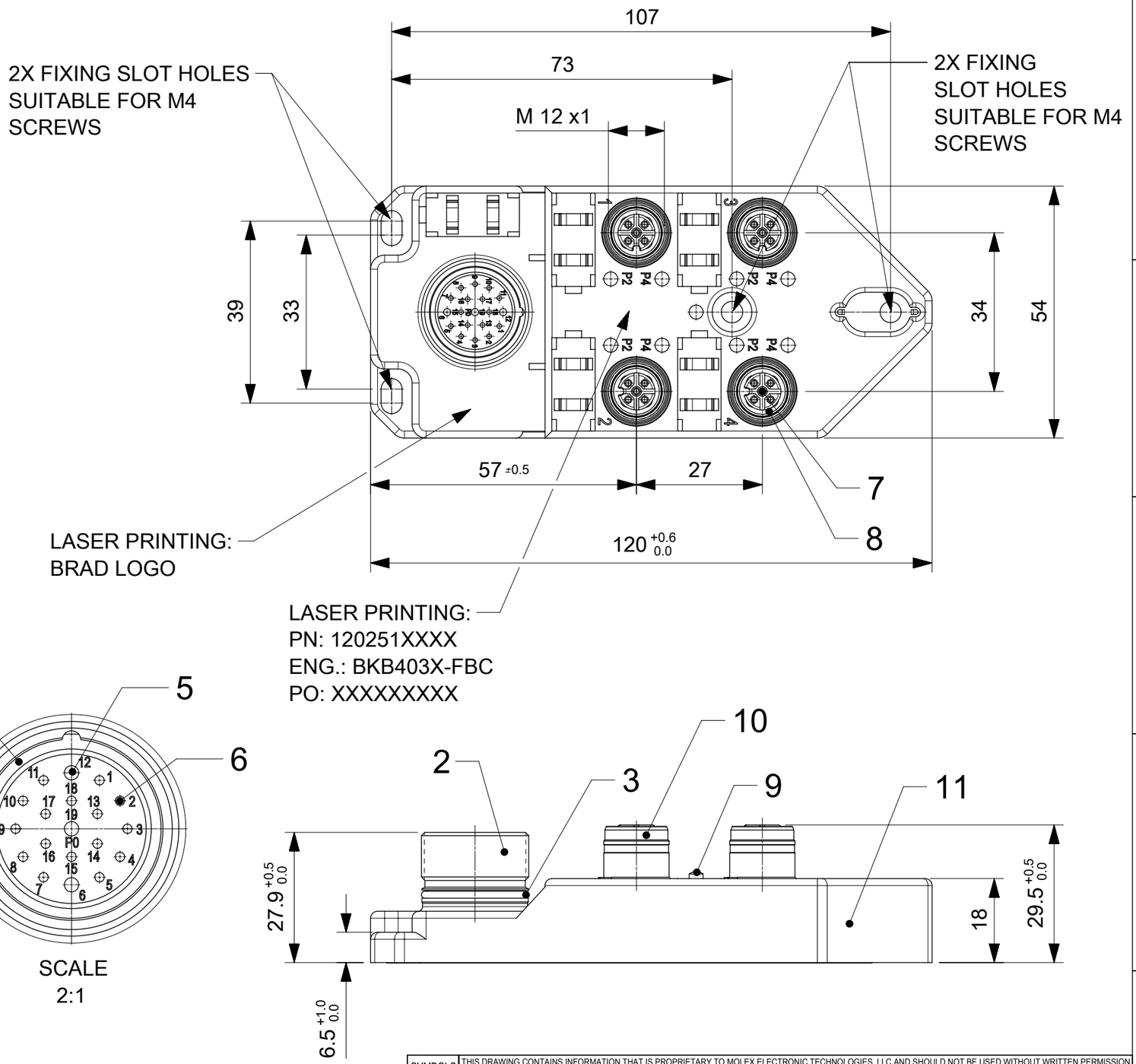

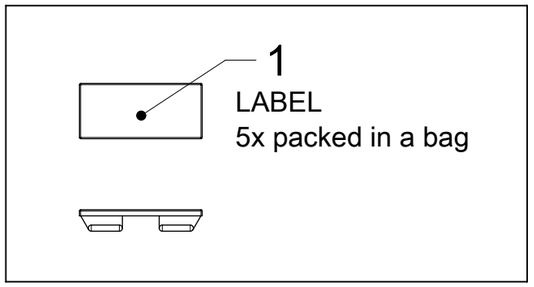

GENERAL CHARACTERISTICS:

ELECTRICAL AND MECHANICAL DATA ACC. TO IEC 61076-2-101

NOMINAL VOLTAGE:	10-30 V DC
AMPERE RATING:	4 A PER PORT / 12 A MAX
AMPERE RATING WITH UL REGISTRATION:	3 A PER PORT / 9 A MAX
IP DEGREE OF PROTECTION:	IP 67
TEMPERATURE RANGE:	-25°C to + 85°C

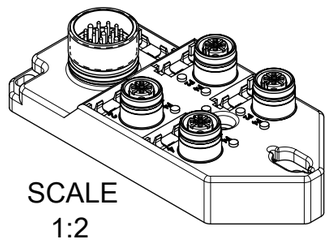

SYMBOLS: E = 0, E = 0, E = 0, S = 0, ▼ = 0, C = 0, ☒ = 0, ■ = 0, ▽ = 0

THIS DRAWING CONTAINS INFORMATION THAT IS PROPRIETARY TO MOLEX ELECTRONIC TECHNOLOGIES, LLC AND SHOULD NOT BE USED WITHOUT WRITTEN PERMISSION

DIMENSION UNITS: mm | SCALE: 1:1

GENERAL TOLERANCES (UNLESS SPECIFIED)

ANGULAR TOL	± 1.0 °
4 PLACES	±
3 PLACES	±
2 PLACES	± 0.05
1 PLACE	± 0.3
0 PLACES	± 0.5

DRAFT WHERE APPLICABLE MUST REMAIN WITHIN DIMENSIONS

CURRENT REV DESC:

EC NO: 630686
DRWN: SSM 2018/12/07
CHK'D: RSILLER 2020/01/17
APPR: RSILLER 2020/01/17

INITIAL REVISION:
DRWN: SSM 2018/12/07
APPR: RSILLER 2020/01/17

THIRD ANGLE PROJECTION | DRAWING: A3-SIZE | SERIES: 120251

molex

MPIS U12 NON 5P 4PT M23 BK DUAL

PRODUCT CUSTOMER DRAWING

DOCUMENT NUMBER	DOC TYPE	DOC PART	REVISION
1202510070	PSD	000	A

MATERIAL NUMBER	CUSTOMER	SHEET NUMBER
SEE TABLE 1	GENERAL MARKET	1 OF 2

DOCUMENT STATUS	P1	RELEASE DATE	2020/01/17 08:23:49

FORMAT: master-lb-prod-A3
REVISION: H
DATE: 2018/01/18

Wiring Diagram NON LED

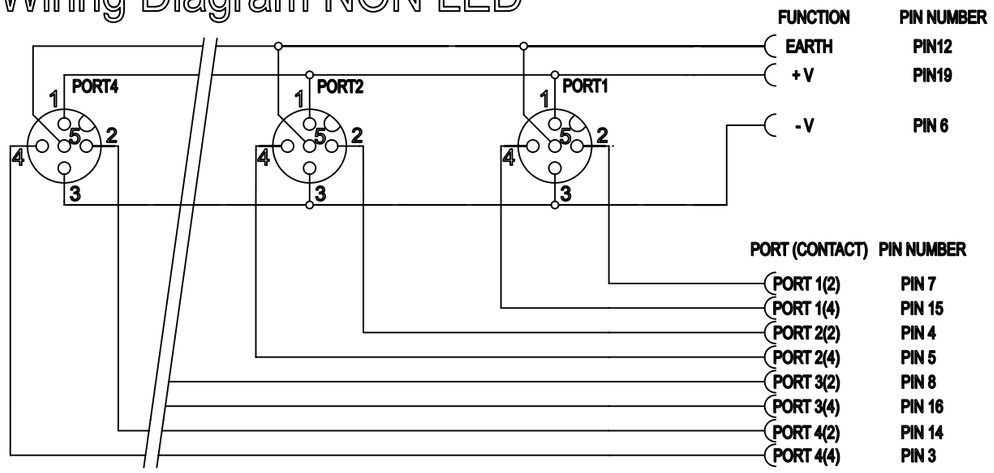

Wiring Diagram PNP

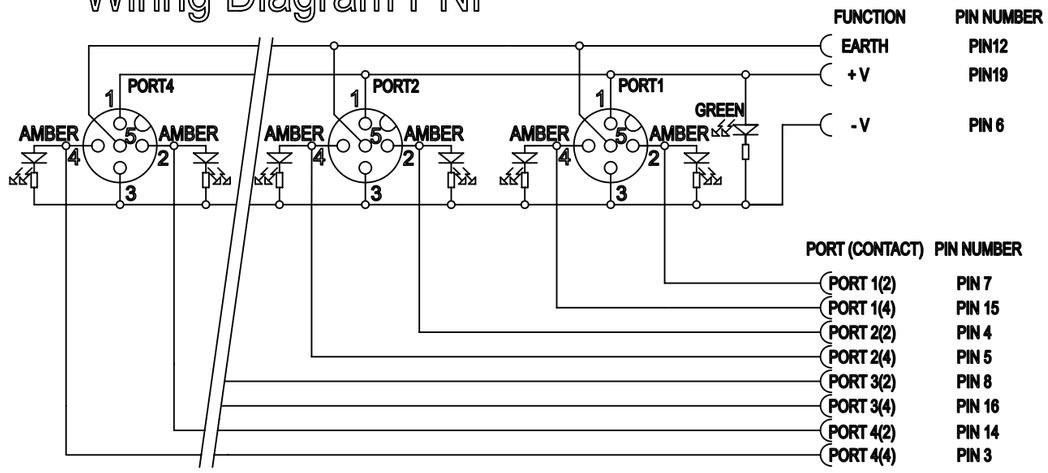

Wiring Diagram NPN Dual

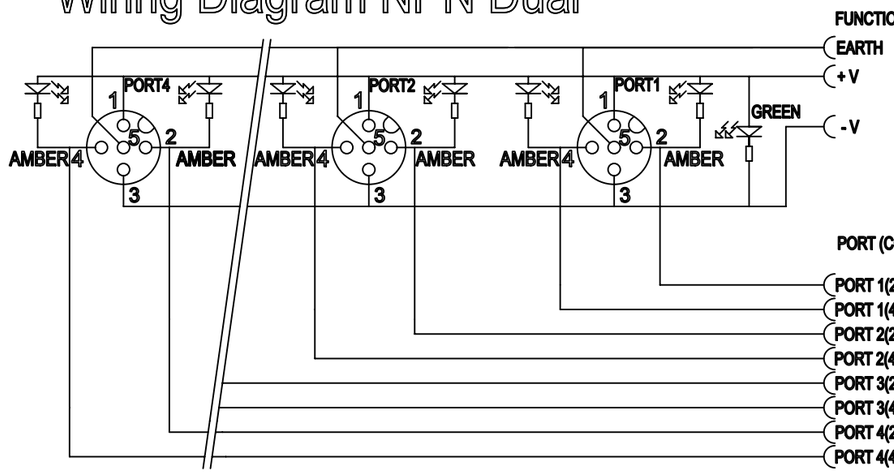

SYMBOLS	THIS DRAWING CONTAINS INFORMATION THAT IS PROPRIETARY TO MOLEX ELECTRONIC TECHNOLOGIES, LLC AND SHOULD NOT BE USED WITHOUT WRITTEN PERMISSION			
EW = 0	DIMENSION UNITS: mm	SCALE: 5:1	CURRENT REV DESC:	molex
EC = 0	GENERAL TOLERANCES (UNLESS SPECIFIED)			
EP = 0	ANGULAR TOL ± 1.0 °		EC NO: 630686	MPIS U12 NON 5P 4PT M23 BK DUAL
S = 0	4 PLACES ±		DRWN: SSM 2018/12/07	
▼ = 0	3 PLACES ±		CHK'D: RSILLER 2020/01/17	PRODUCT CUSTOMER DRAWING
C = 0	2 PLACES ± 0.05		APPR: RSILLER 2020/01/17	
☒ = 0	1 PLACE ± 0.3		INITIAL REVISION:	DOCUMENT NUMBER: 1202510070 / DOC TYPE: PSD / DOC PART: 000 / REVISION: A
■ = 0	0 PLACES ± 0.5		DRWN: SSM 2018/12/07	
▽ = 0	DRAFT WHERE APPLICABLE MUST REMAIN WITHIN DIMENSIONS	THIRD ANGLE PROJECTION	APPR: RSILLER 2020/01/17	DRAWING: A3-SIZE / SERIES: 120251 / MATERIAL NUMBER: SEE TABLE 1 / CUSTOMER: GENERAL MARKET / SHEET NUMBER: 2 OF 2

DOCUMENT STATUS	P1	RELEASE DATE	2020/01/17 08:23:49

FORMAT: master-tb-prod-A3
REVISION: H
DATE: 2018/01/18