E10027

Hexagon nut

NUT M18X1 BRASS 2 PIECES

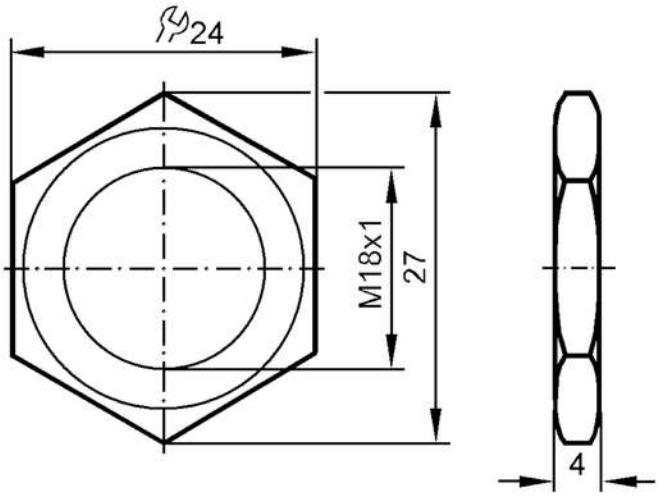

Mechanical data		
Weight	[g]	16.5
Dimensions	[mm]	M18 x 1
Thread designation		M18 x 1
Materials		brass nickel-plated
Remarks		
Pack quantity		2 pcs.