306P Zero-volt protection switch Technical Data

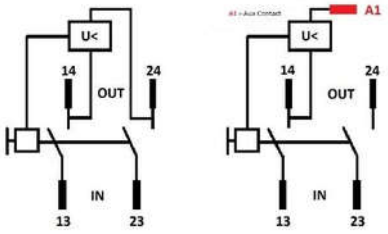



Usage:	Multifaceted use in devices from domestic and industrial sectors				
	Switching of motors and heating circuits				
Certificates:	VDE according to DIN EN 60947-1 (depending on type)				
	VDE according to DIN EN 60947-4-1 (depending on type)				
	UL (depending on type)				
Characteristics:	positively driven contact				
	Flat connection 6,3 x 0,8 mm				
	option coil connection (A1) flat connectors 2,8 x 0,8 mm (depending on type)				
	Operating mechanism with rocker or push buttons				
	several sealing versions available				
Housing material:	black: PA66 GF25 / Schulamid 66 GF25 FR 5A black				
Operating mechanism:	Mechanical ON/OFF, mechanical ON/ electrical OFF				
Technical data:					
Rated frequency:	50/60 Hz (depending on type)				
Rated insulation voltage Ui:	230 V				
Degree of pollution:	3				
Conventional thermal current Ith:	16 A				
Utilization category:	**AC1**	**AC3**			
Rated operational voltage Ue:	230 V 1~	230 V 1~			
Rate operational current Ie:	16 A	14,5 A			
Mechanical durability:	50.000 Switching cycles				
Electrical durability AC1:	50.000 Switching cycles with 16A				
Electrical durability AC3:	50.000 Switching cycles with 10A				
	35.000 Switching cycles with 14,5A				
Switching cycles:	600 cycles/hour				
Protection class:	IP54				
Protection class with sealing:	IP65				
Mounting:	Snap in version				
	2 Drilling holes Ø 4,2mm – 42mm				
	2 Drilling holes Ø 4,2mm – 62mm				
Panel cutout	Ca. 46,5mm x 22,1mm				
allowed ambient temperature:	-5 °C to 40 °C				

Coil versions:	Voltage / Frequency	Current Consumption	Resistance
	115V / 50Hz	26mA	1250Ω +/- 50Ω
	230V / 50Hz	12mA	5000Ω +/- 400Ω
	115V / 60Hz		900Ω +/- 50Ω
	120V / 60Hz		1100Ω +/- 50Ω
	230V / 60Hz		3800Ω +/- 200Ω

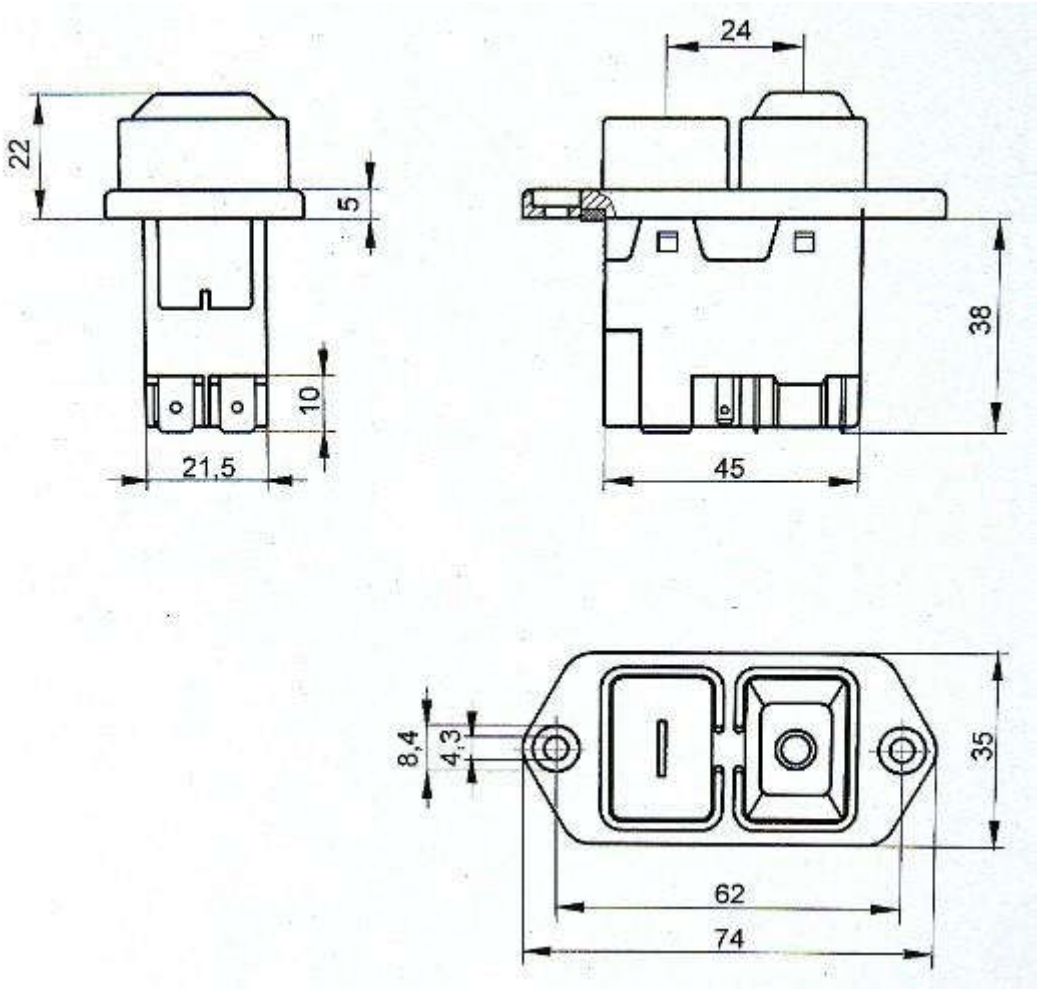
22
5
10
21,5
24
38
45
8,4
4,3
35
62
74

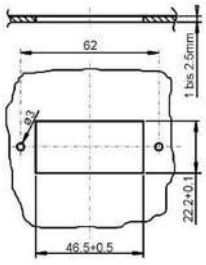
62
1 bis 2,5mm
Ø2
22,2+0,1
46,5+0,5