Plastic bodied limit switch
Series I49

Description **I49-U1Z AH**	Article number **6089135057**

Operating symbol

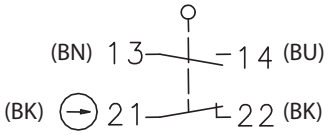

Operating diagram

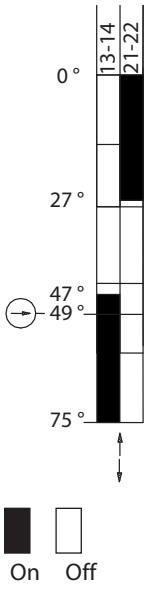

On Off

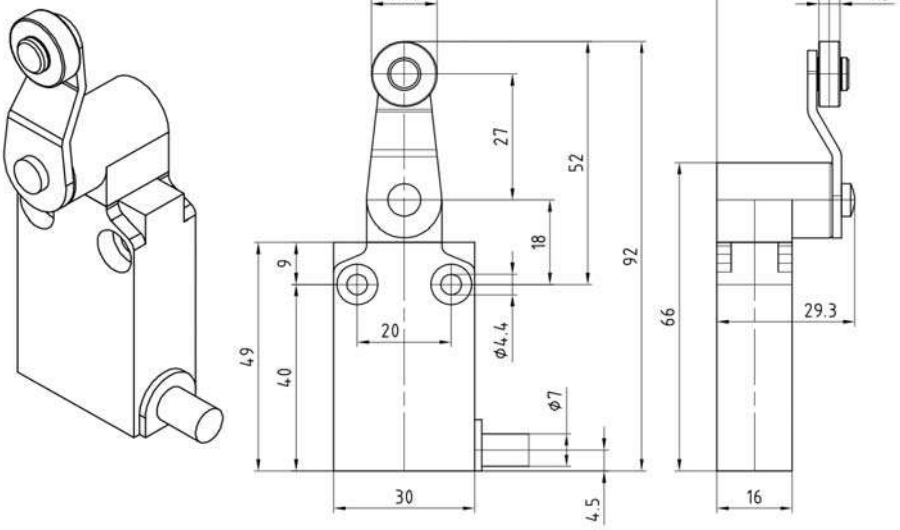

Electrical Data		
Rated insulation voltage acc. to DIN EN 60947-1 acc.to UL 508 and CSA C22-2 n° 14	U_i	400 V (degree of pollution 3) B300, R300
Conv. thermal current acc. to DIN EN 60947-5-1) 0 < 40 °C	I_{the}	10 A
Rated operational voltage	U_e	240 V
Utilization category		AC-15, 24 V - 10 A / 240 V - 3 A DC-13, 24 V - 2.8 A / 125 V - 0.22 A / 250 V - 0.27 A
Direct opening action	⊖	acc. to IEC/EN 60947-5-1
Short-circuit protective device U_e < 500 V a.c. - gG type fuses		Fuse 10 A gG
Protection class		II, totally insulated

Mechanical data	
Enclosure	Pre-wired, Double insulation, Plastic Casing IP67, 30 mm width (polymeric)
Actuator	Plunger (nikel -plated), lever (galvanized), roller Ø14 mm (nylon)
Ambient air temperature -during operation -for storage	 -25 °C … +70 °C -40 °C … +70 °C
Contact type	non overlapping slow action contacts, 1 NO, 1 NC
Mechanical life	10 x 10^6 switching cycles
Switching frequency	60 / min
Velocity for actuating	1,5 m/s
Resistance between contacts	< 25 mΩ
Connection	PVC 4 x 0,75 mm^2 UL cable, 1m length
Installation position	All positions are authorized
Protection type	IP67 acc. to IEC/EN 60529

Standards	
	DIN EN 60947-1
	DIN EN 60947-5-1

EU Conformity
acc. to directive 2006/95/EC

Approvals
$_{c}UL_{US}$

Notes
Type 1 enclosure (“indoor use only“) acc. to UL50

Technical modifications and errors excepted.
The technical datasheet corresponds to the technical state as of 2016-02-19 and will not be removed in case of changes.