Top View of Assembly

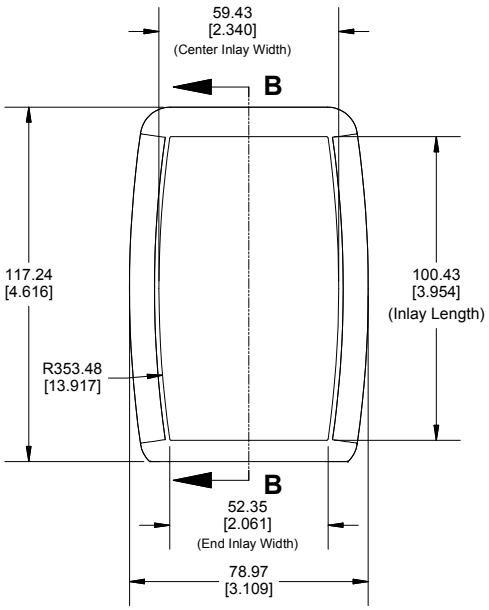

SECTION B-B
(Side View Inside Assembly)

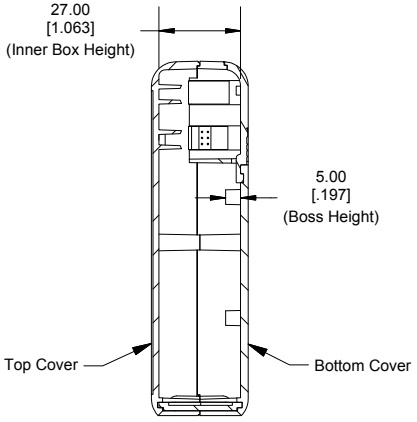

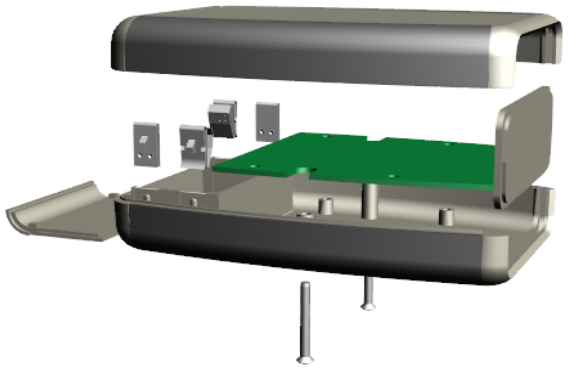

End View of Assembly

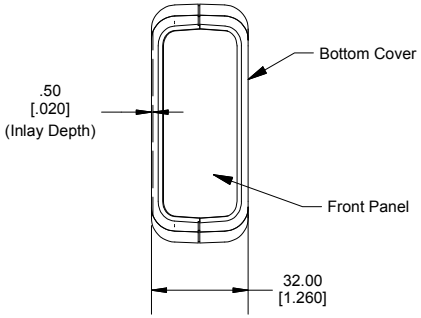

Inside of Bottom Cover

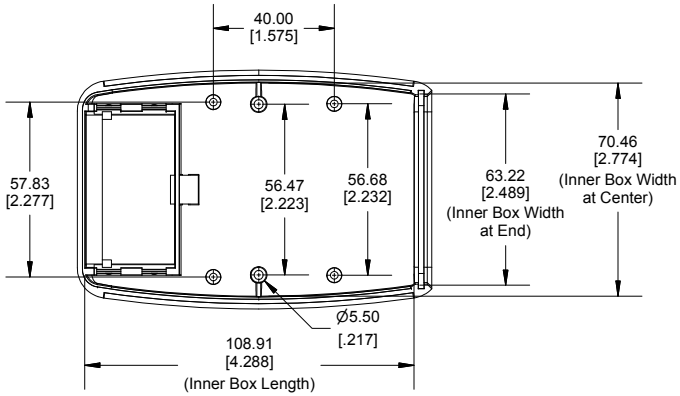

Front Panel

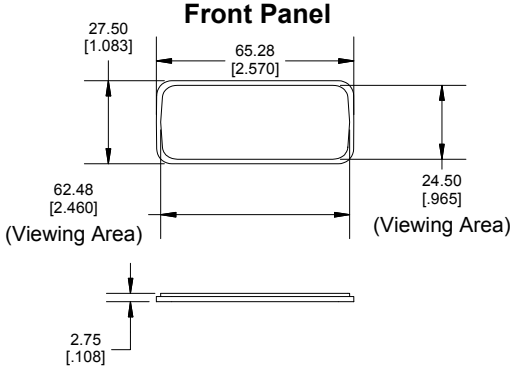

Maximum P.C. Board Size

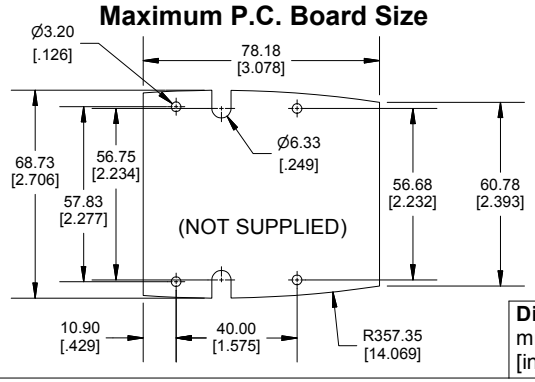

Dimensions:
mm
[inches]

Enclosures can be Factory Modified (Milling, Drilling, Printing etc.)
Contact Factory mjm@hammondmfg.com for quotes
Solid models of this enclosure available in STEP or IGES.
(Part number and text placement/orientation on our products are subject to change, we do not recommend using them as a locating reference for modification purposes)

NOTE
Enclosure molded from GP ABS Plastic.
Purchased assembly includes Top, Bottom, front plastic panel, Battery Door, battery spring clips (4 pcs), 9V adapter (1pcs) and 2 cover screws. (P.C. Board not supplied)
Recommended Cover screw torque -- 2.5 lbf-in (30 cN-m)

PART NUMBER	
1553C Battery Enclosure	
Black Enclosure/Grey Over-mold	1553CBKBAT
Grey Enclosure/Grey Over-mold	1553CGYBAT
ACCESSORIES	
Oval Head Cover Screws Self-Tapping (Pkg 100) [#4 X 1" (25.4mm)]	SC1553C100 (Silver) SC1553C100BK (Black)
P.C. Board Self Tapping Screw [#4 X 1/4" (6.4mm) Plated]	1593ATS50 (Pkg 50) 1593ATS100 (Pkg 100)
Belt or Pocket Clip	1599CLIP (Black) 1599CLIPGY (Grey)
9V Battery Kit	BS61
AA Battery Clip Kit (4 positive and 4 Negative)	1553HDR-BKIT

HAMMOND MANUFACTURING®

1553CBAT

www.hammondmfg.com