JUMO GmbH & Co. KG
Delivery address: Mackenrodtstraße 14
36039 Fulda, Germany
Postal address: 36035 Fulda, Germany
Phone: +49 661 6003-0
Fax: +49 661 6003-607
Email: mail@jumo.net
Internet: www.jumo.net

JUMO Instrument Co. Ltd.
JUMO House
Temple Bank, Riverway
Harlow, Essex, CM20 2DY, UK
Phone: +44 1279 63 55 33
Fax: +44 1279 62 50 29
Email: sales@jumo.co.uk
Internet: www.jumo.co.uk

JUMO Process Control, Inc.
6724 Joy Road
East Syracuse, NY 13057, USA
Phone: +1 315 437 5866
Fax: +1 315 437 5860
Email: info.us@jumo.net
Internet: www.jumousa.com

JUMO miroVIEW

Smart digital indicator with limit value monitoring function

Brief description

The smart digital indicator is used for the electronic display of a process temperature. The device acquires this via an analog input for a RTD temperature probe. Further functionalities are limit value monitoring, min/max value storage, hold function and tare function. The device is available with 1 relay (normally open contact AC 250 V, 16 A).

The difference between the two types of devices is the diameter of the front panel: Type 701590 Ø 60.5 mm, Type 701591 Ø 80.5 mm. The round housing design allows the device to be used wherever round dial instruments were previously in use.

The device is characterized by simple, clearly structured operation supported by texts in English, German, French, and Spanish. Process values, texts, and parameters are shown in two 18-segment LCD displays. Additional display elements inform about the switch position of the output, the timer status, and temperature unit.

Pluggable terminal strips with PUSH IN technology enable fast electrical installation.

Operation, parameterization, and configuration are carried out via a membrane keyboard with four keys. The setup program on a PC allows the device to be configured without any problems. No separate voltage supply is required when configuring via the USB interface (USB-powered).



miroVIEW Type 701590

Block diagram

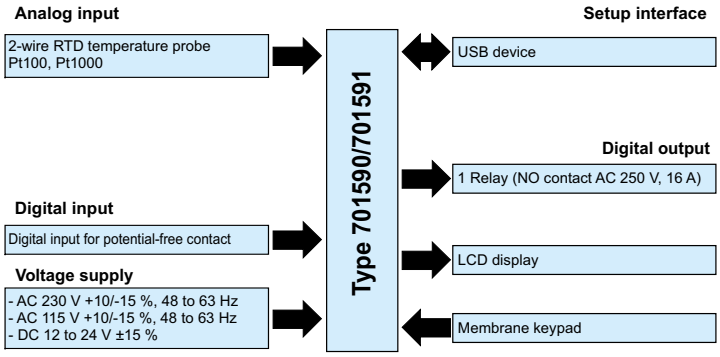

Special features

- Integrated timer function
- Service and operating hours counter
- Fast wiring through pluggable terminal strips with PUSH IN technology
- High-quality display and intuitive operation
- Configuration on the device or with the setup program (accessories) via USB interface (USB-powered
- Operator guidance with text support in 4 languages
- Limit value monitoring function

Approvals and approval marks (see technical data)

JUMO GmbH & Co. KG
Delivery address: Mackenrodtstraße 14
36039 Fulda, Germany
Postal address: 36035 Fulda, Germany
Phone: +49 661 6003-0
Fax: +49 661 6003-607
Email: mail@jumo.net
Internet: www.jumo.net

JUMO Instrument Co. Ltd.
JUMO House
Temple Bank, Riverway
Harlow, Essex, CM20 2DY, UK
Phone: +44 1279 63 55 33
Fax: +44 1279 62 50 29
Email: sales@jumo.co.uk
Internet: www.jumo.co.uk

JUMO Process Control, Inc.
6724 Joy Road
East Syracuse, NY 13057, USA
Phone: +1 315 437 5866
Fax: +1 315 437 5860
Email: info.us@jumo.net
Internet: www.jumousa.com

Device types



Type 701590



Type 701591

Description

Indicator functions

In addition to the classic display of the measured value, the device has additional functions such as min/max value display, a hold function for freezing the measured value and a tare function for weighing applications. Some functions can be configured via the membrane keypad on the front.

Inputs and outputs

An RTD temperature probe in two-wire circuit can be connected via the analog input for temperature measurement. As relay output 1 normally open contact is available. The digital input is provided to connect a potential-free contact.

USB device interface

The device is equipped with a USB device interface (micro-B socket on the rear side). This is intended for connecting to a PC and for configuring the device via the setup program. Thereby the device is powered via the USB interface. As a result, no mains supply is required during the configuration.

Electrical connection

The electrical connection saves time by using practical spring-cage terminals (Push-In technology).

Limit value monitoring functions

The device is equipped with three limit value monitoring functions, each with two configurable alarm functions. Any analog signal from a selector is selected as the value to be monitored. An absolute value serves as the limit value. Special functions such as switch-on/switch-off delay, pulse function, alarm suppression in the switch-on phase or in case of a parameter change, alarm latch, and lock with acknowledgment are available. With the limit value monitoring function, extensive alarm and limit value functions can be implemented.

Timer

After the timer is started, a signal is output for the duration of the timer running time; this signal is invertible. It is also possible to start the timer after the lead time has elapsed or after reaching a tolerance limit. A timer end signal can be output after the timer has elapsed (limit by time or acknowledgement).

Service counter

The service counter is used either to count the switching frequency of a binary signal or to determine its switch-on duration. When the set limit value is reached, a binary signal is activated that needs to be acknowledged.

In addition, an operating hours counter is available that determines the device's operation time.

Setup program

The setup program, which is available as an accessory, provides the user with an easy and comfortable way to configure the device using a PC. This allows data records to be created, edited and transferred to the device, as well as read out from there. A recording function for start-up is available.

Customer-specific Linearization

Sensor signals with special characteristic line properties can also be used through customer-specific linearization. Programming is carried out in the setup program on the basis of a value table with up to 40 value pairs or through a formula (4th order polynomial).

JUMO GmbH & Co. KG
Delivery address: Mackenrodtstraße 14
36039 Fulda, Germany
Postal address: 36035 Fulda, Germany
Phone: +49 661 6003-0
Fax: +49 661 6003-607
Email: mail@jumo.net
Internet: www.jumo.net

JUMO Instrument Co. Ltd.
JUMO House
Temple Bank, Riverway
Harlow, Essex, CM20 2DY, UK
Phone: +44 1279 63 55 33
Fax: +44 1279 62 50 29
Email: sales@jumo.co.uk
Internet: www.jumo.co.uk

JUMO Process Control, Inc.
6724 Joy Road
East Syracuse, NY 13057, USA
Phone: +1 315 437 5866
Fax: +1 315 437 5860
Email: info.us@jumo.net
Internet: www.jumousa.com

Technical data

Analog input

RTD temperature probe

Designation	Standard	ITS	Connection type	Measuring range	Accuracy[a]	Measuring current
Pt100	DIN EN 60751:2008 IEC 60751:2008	ITS-90	Two-wire	-200 to +600 °C	≤ 0.25 %	500 µA
Pt1000	DIN EN 60751:2009 IEC 60751:2008	ITS-90	Two-wire	-200 to +600 °C	≤ 0.25 %	100 µA
Customer-specific				150 to 3000 Ω	≤ 0.25 %	< 500 µA

[a] Accuracy refers to the measuring range.

Ambient temperature influence	≤ 300 ppm/K
Sensor line resistance	Max. 30 Ω per line
Input filter	Digital filter, 2nd order; filter constant can be set from 0 to 100.0 s

Measuring circuit monitoring

The device behavior in the event of a malfunction is configurable.

Measuring probe	Measuring range underflow	Measuring range overflow	Short-circuit (probe/line)	Break (probe/line)	Reverse polarity
RTD temperature probe	++	++	++	++	---
++ = is detected		--- = is not detected		(+) = is detected in certain conditions	

Digital input

Input for potential-free contact	
Function	Contact closed: input is active (R_{ON} < 1 kΩ) Contact open: input is inactive (R_{OFF} > 100 kΩ)

Digital output

1 relay (normally open contact)		Order code 25
Switching capacity	Max. 16 A at AC 250 V, resistive load	
Contact life	100,000 switching operations at rated load	

Interface

USB device	
Connector type	Micro-B (socket)
Standard	Low-Speed, Full-Speed
Max. cable length	5 m

Display

18-segment LCD displays		
	Upper display:	Lower display:
Digit height	13 mm	4 mm
Color	white	Green
Places, including decimal places	4	7
Decimal places	0, 1, or automatic (configurable)	

JUMO GmbH & Co. KG
Delivery address: Mackenrodtstraße 14
36039 Fulda, Germany
Postal address: 36035 Fulda, Germany
Phone: +49 661 6003-0
Fax: +49 661 6003-607
Email: mail@jumo.net
Internet: www.jumo.net

JUMO Instrument Co. Ltd.
JUMO House
Temple Bank, Riverway
Harlow, Essex, CM20 2DY, UK
Phone: +44 1279 63 55 33
Fax: +44 1279 62 50 29
Email: sales@jumo.co.uk
Internet: www.jumo.co.uk

JUMO Process Control, Inc.
6724 Joy Road
East Syracuse, NY 13057, USA
Phone: +1 315 437 5866
Fax: +1 315 437 5860
Email: info.us@jumo.net
Internet: www.jumousa.com

Electrical data

Voltage supply according to the ordered version	02	AC 230 V -15/+10 %, 48 to 63 Hz		
	05	AC 115 V -15/+10 %, 48 to 63 Hz		
	30	DC 12 to 24 V, -15/+15 % SELV		
Electrical safety		acc. to DIN EN 61010, part 1 Overvoltage category II to 300 V mains voltage, Pollution degree 2		
Power consumption		Type AC 230 V:	Type AC 115 V:	Type DC 12 to 24 V:
Type 701590		Max. 2.1 W	Max. 3.3 W	Max. 1.2 W
Type 701591		Max. 2.1 W	Max. 3.3 W	Max. 1.2 W
Accuracy of timer		1 %		
Sampling rate		250 ms		
Electrical connection		On the back via plug connectors with spring-cage terminals (PUSH IN technology)		
Conductor cross section, mechanical				
Wire or stranded wire (without ferrule)		Min. 0.2 mm^2, max. 1.5 mm^2 (terminal strips 3 and 4: max. 2.5 mm^2)		
Stranded wire with ferrule		Without plastic collar: min. 0.25 mm^2, max. 1.5 mm^2 (terminal strips 3 and 4: max. 2.5 mm^2)		
		With plastic collar: min. 0.25 mm^2, max. 0.75 mm^2 (terminal strips 3 and 4: max. 2.5 mm^2)		
Stripping length		8 mm		
Conductor cross section, electric				
5 A load current		Min. 0.75 mm^2		
10 A load current		Min. 1.0 mm^2		
16 A load current		Min. 1.5 mm^2		

Environmental influences

Ambient temperature range	
Storage	-30 to +70 °C
Operation	-10 to +55 °C
Site altitude	Max. 2000 m above sea level
Climatic environmental influences	According to DIN EN 60721-3 with extended temperature range
Resistance to climatic conditions	≤ 90 % rel. humidity without condensation
Storage	According to class 1K2
Operation	According to class 3K3
Mechanical environmental influences	According to DIN EN 60721-3
Storage	According to class 1M2
Transport	According to class 2M2
Operation	According to class 3M3
Electromagnetic compatibility (EMC)	Product family standard DIN EN 61326-1
Interference emission	Class B[a]
Interference immunity	Industrial requirement

[a] The product is suitable for industrial use as well as for households and small businesses

JUMO GmbH & Co. KG
Delivery address: Mackenrodtstraße 14
36039 Fulda, Germany
Postal address: 36035 Fulda, Germany
Phone: +49 661 6003-0
Fax: +49 661 6003-607
Email: mail@jumo.net
Internet: www.jumo.net

JUMO Instrument Co. Ltd.
JUMO House
Temple Bank, Riverway
Harlow, Essex, CM20 2DY, UK
Phone: +44 1279 63 55 33
Fax: +44 1279 62 50 29
Email: sales@jumo.co.uk
Internet: www.jumo.co.uk

JUMO Process Control, Inc.
6724 Joy Road
East Syracuse, NY 13057, USA
Phone: +1 315 437 5866
Fax: +1 315 437 5860
Email: info.us@jumo.net
Internet: www.jumousa.com

Case

Case type	Plastic case for panel mounting according to IEC 61554 (indoor use), cobalt blue RAL 5013
Case front	Membrane keyboard, upper slope cobalt blue RAL 5013, lower slope silver grey RAL 7001
Panel thickness	1 to 10 mm
Case mounting	In panel using the supplied mounting frame or both mounting elements
Operating position	Any[a]
Protection type	According to DIN EN 60529, IP65 on the front, IP20 on the back
Weight	
Type 701590	Max. 160 g
Type 701591	Max. 240 g

[a] The maximum admissible ambient temperature only applies for the installation with the display in a vertical position.

Approvals and approval marks

Approval mark	Test facility	Certificates/Certification numbers	Inspection basis	Valid for
c UL us	Underwriters Laboratories	E201387	UL 61010-1 (3rd Ed.), CAN/CSA-22.2 No. 61010-1 (3rd Ed.)	All types

The device is approved if the relevant approval mark is pictured on the device.

JUMO GmbH & Co. KG
Delivery address: Mackenrodtstraße 14
36039 Fulda, Germany
Postal address: 36035 Fulda, Germany
Phone: +49 661 6003-0
Fax: +49 661 6003-607
Email: mail@jumo.net
Internet: www.jumo.net

JUMO Instrument Co. Ltd.
JUMO House
Temple Bank, Riverway
Harlow, Essex, CM20 2DY, UK
Phone: +44 1279 63 55 33
Fax: +44 1279 62 50 29
Email: sales@jumo.co.uk
Internet: www.jumo.co.uk

JUMO Process Control, Inc.
6724 Joy Road
East Syracuse, NY 13057, USA
Phone: +1 315 437 5866
Fax: +1 315 437 5860
Email: info.us@jumo.net
Internet: www.jumousa.com

Dimensions

Type 701590

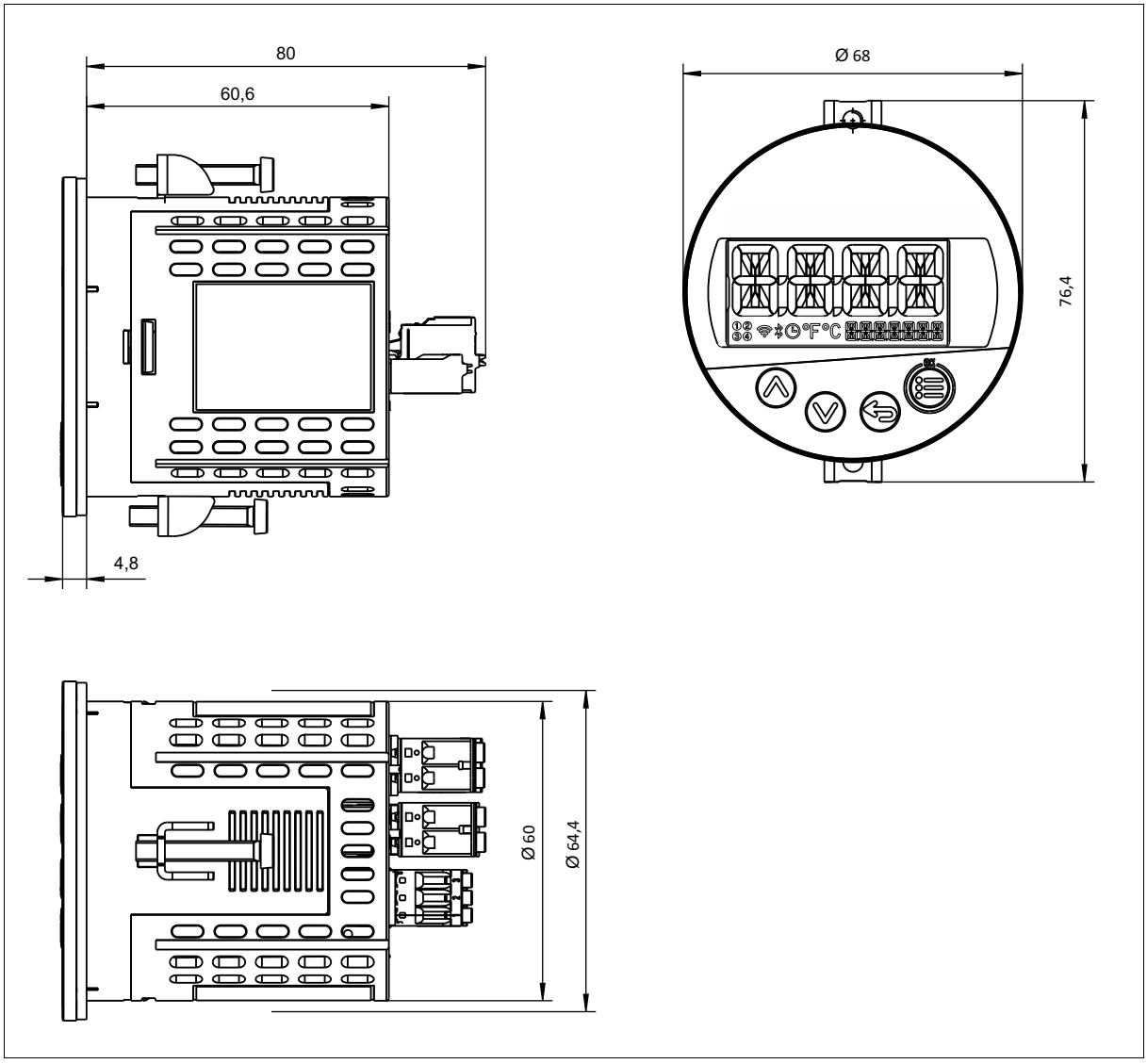

JUMO GmbH & Co. KG
Delivery address: Mackenrodtstraße 14
36039 Fulda, Germany
Postal address: 36035 Fulda, Germany
Phone: +49 661 6003-0
Fax: +49 661 6003-607
Email: mail@jumo.net
Internet: www.jumo.net

JUMO Instrument Co. Ltd.
JUMO House
Temple Bank, Riverway
Harlow, Essex, CM20 2DY, UK
Phone: +44 1279 63 55 33
Fax: +44 1279 62 50 29
Email: sales@jumo.co.uk
Internet: www.jumo.co.uk

JUMO Process Control, Inc.
6724 Joy Road
East Syracuse, NY 13057, USA
Phone: +1 315 437 5866
Fax: +1 315 437 5860
Email: info.us@jumo.net
Internet: www.jumousa.com

Type 701591

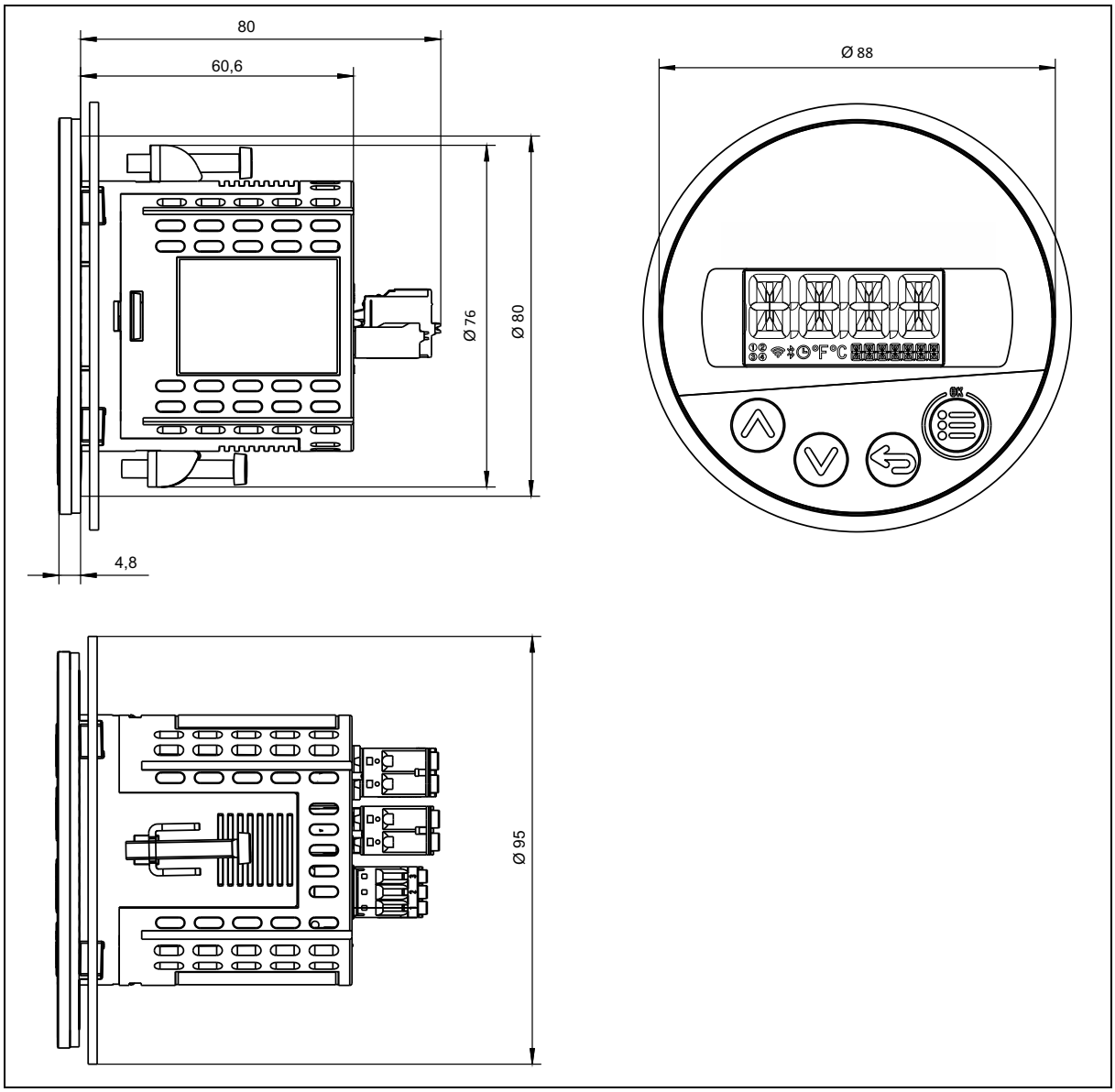

Installation dimensions

Type	Panel cut-out Ø	Mounting depth without seal	Minimum spacing of panel cut-outs (for close mounting)	
			Horizontal	Vertical
701590	60.5 +0.5 mm	80 mm	15 mm	30 mm
701591	80.5 +0.5 mm			

JUMO GmbH & Co. KG
Delivery address: Mackenrodtstraße 14
36039 Fulda, Germany
Postal address: 36035 Fulda, Germany
Phone: +49 661 6003-0
Fax: +49 661 6003-607
Email: mail@jumo.net
Internet: www.jumo.net

JUMO Instrument Co. Ltd.
JUMO House
Temple Bank, Riverway
Harlow, Essex, CM20 2DY, UK
Phone: +44 1279 63 55 33
Fax: +44 1279 62 50 29
Email: sales@jumo.co.uk
Internet: www.jumo.co.uk

JUMO Process Control, Inc.
6724 Joy Road
East Syracuse, NY 13057, USA
Phone: +1 315 437 5866
Fax: +1 315 437 5860
Email: info.us@jumo.net
Internet: www.jumousa.com

Galvanic isolation

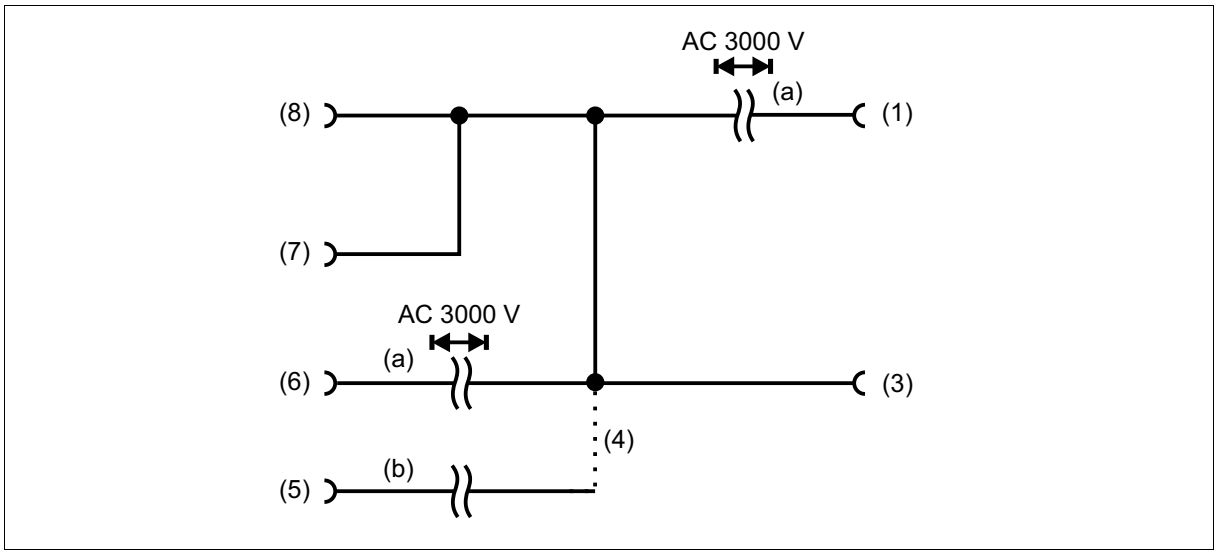

a	The voltage specifications correspond to the test voltages (alternating voltage, rms values) according to DIN EN 61010-1 (VDE 0411-1):2020-03	b	Functional galvanic isolation for connecting SELV or PELV electrical circuits
1	Relay output		
3	USB interface	4	or
5	Voltage supply DC 12 V to 24 V	6	Voltage supply 230 V, 48 to 63 Hz 115 V, 48 to 63 Hz
7	Digital input	8	Analog input

JUMO GmbH & Co. KG
Delivery address: Mackenrodtstraße 14
36039 Fulda, Germany
Postal address: 36035 Fulda, Germany
Phone: +49 661 6003-0
Fax: +49 661 6003-607
Email: mail@jumo.net
Internet: www.jumo.net

JUMO Instrument Co. Ltd.
JUMO House
Temple Bank, Riverway
Harlow, Essex, CM20 2DY, UK
Phone: +44 1279 63 55 33
Fax: +44 1279 62 50 29
Email: sales@jumo.co.uk
Internet: www.jumo.co.uk

JUMO Process Control, Inc.
6724 Joy Road
East Syracuse, NY 13057, USA
Phone: +1 315 437 5866
Fax: +1 315 437 5860
Email: info.us@jumo.net
Internet: www.jumousa.com

Display and control elements

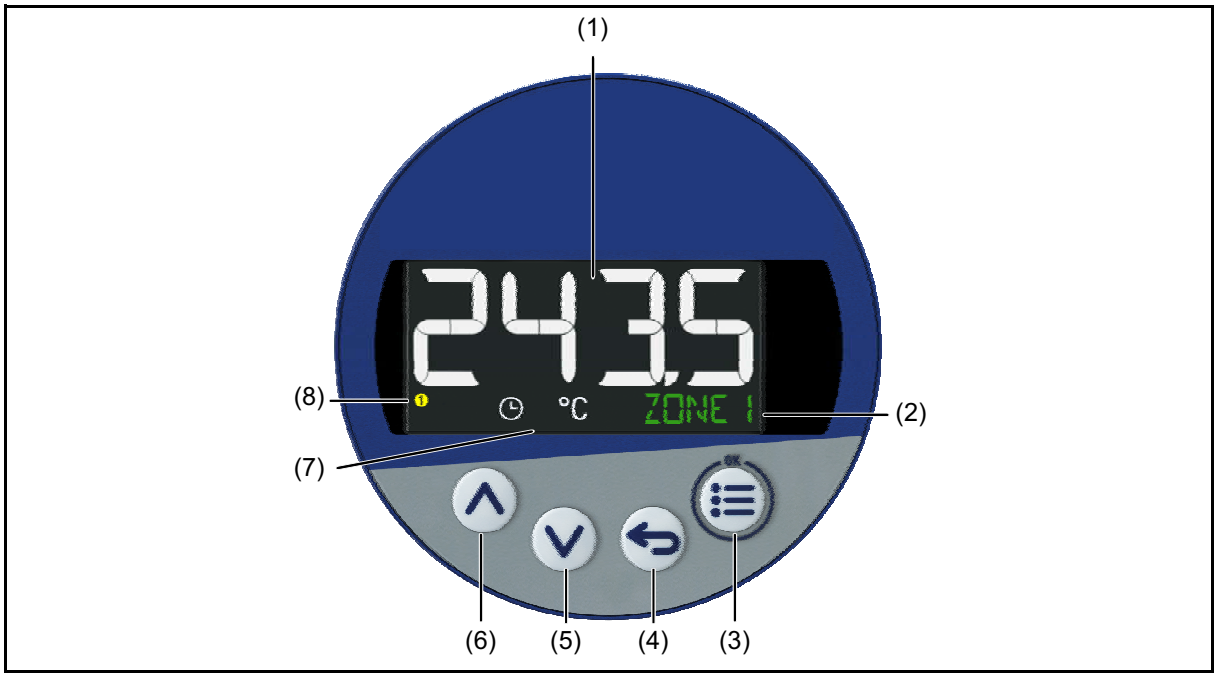

1	**Display 1** - 18-segment LCD display (e.g. actual value), 4-digit, white; also for displaying menu items, parameters and text	2	**Display 2** - 18-segment LCD display (e.g. setpoint value), 7-digit green; displaying of menu items, parameters, text and values; here individually configured measuring point designation (ZONE 1)
3	Menu/OK (call up main menu, switch to submenu/level, switch to editing mode, exit editing mode with change)	4	Back (in menu: back to previous menu level, exit editing mode without change; in basic status: configurable function)
5	Down (in the menu: reduce value, select next menu item or parameter)	6	Up (in the menu: increase value, select previous menu item or parameter)
7	Timer (illuminated = on, flashing = started), Temperature Unit	8	Switch position of the digital outputs (yellow = active)

JUMO GmbH & Co. KG
Delivery address: Mackenrodtstraße 14
36039 Fulda, Germany
Postal address: 36035 Fulda, Germany
Phone: +49 661 6003-0
Fax: +49 661 6003-607
Email: mail@jumo.net
Internet: www.jumo.net

JUMO Instrument Co. Ltd.
JUMO House
Temple Bank, Riverway
Harlow, Essex, CM20 2DY, UK
Phone: +44 1279 63 55 33
Fax: +44 1279 62 50 29
Email: sales@jumo.co.uk
Internet: www.jumo.co.uk

JUMO Process Control, Inc.
6724 Joy Road
East Syracuse, NY 13057, USA
Phone: +1 315 437 5866
Fax: +1 315 437 5860
Email: info.us@jumo.net
Internet: www.jumousa.com

Connection diagram

The connection diagram in the data sheet provides information on product selection.

For the electrical connection, only use the installation instructions or the operating manual.

Type 701590 (Ø 60) and Type 701591 (Ø 80)

Ø 60 mm

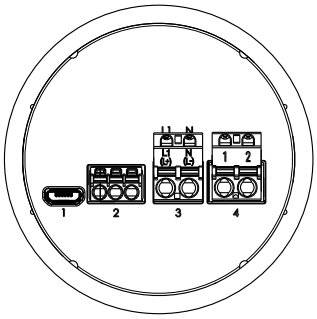

Ø 80 mm

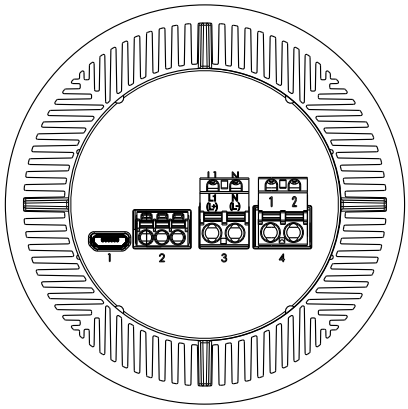

Terminal strip 2 **Analog input, digital input**
RTD temperature probe in two-wire circuit and digital input 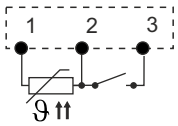

Terminal strip 3 **L1(L+), N(L-)**
Voltage supply (see name-plate) AC 230 V, 48 to 63 Hz or AC 115 V, 48 to 63 Hz or DC 12 to 24 V

Terminal strip 4 **Digital output**
1 relay normally open contact 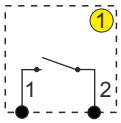

JUMO GmbH & Co. KG
Delivery address: Mackenrodtstraße 14
36039 Fulda, Germany
Postal address: 36035 Fulda, Germany
Phone: +49 661 6003-0
Fax: +49 661 6003-607
Email: mail@jumo.net
Internet: www.jumo.net

JUMO Instrument Co. Ltd.
JUMO House
Temple Bank, Riverway
Harlow, Essex, CM20 2DY, UK
Phone: +44 1279 63 55 33
Fax: +44 1279 62 50 29
Email: sales@jumo.co.uk
Internet: www.jumo.co.uk

JUMO Process Control, Inc.
6724 Joy Road
East Syracuse, NY 13057, USA
Phone: +1 315 437 5866
Fax: +1 315 437 5860
Email: info.us@jumo.net
Internet: www.jumousa.com

Order details

	(1)	**Basic type**
701590		**Type 701590** with 1 relay, format (Ø 60 x 80) mm
701591		**Type 701591** with 1 relay, format (Ø 80 x 80) mm
	(2)	**Version**
0		Standard version
1		Customized hardware
2		Customized software
3		Customized hardware and software
	(3)	**Input** (measurement input group)
01		1 RTD temperature probe Pt100, Pt1000 in two-wire circuit, 1 digital input
	(4)	**Output**
25		1 relay (normally open contact AC 250 V, 16 A) resistive load
	(5)	**Voltage supply**
02		AC 230 V, +10/-15 %, 48 to 63 Hz
05		AC 115 V, +10/-15 %, 48 to 63 Hz[a]
30		DC 12 to 24 V +15/-15 %
	(6)	**Extra codes**
000		None

[a] Minimum order quantity 50 pieces

	(1)		(2)		(3)		(4)		(5)		(6)
Order code		/		-		-		-		-	
Order example	701590	/	0	-	01	-	25	-	02	-	000

Scope of delivery

1 device in the ordered version
1 quick start guide
2 panel fasteners
Pluggable terminal strips

Accessories

Description	**Part no.**
Setup program	00777355
USB cable, A connector to Micro-B connector, length 3 m	00616250