MINI-BEAM dc-Voltage Series

Self-contained photoelectric sensors

Models

Sensing Mode		Range	LED	Model
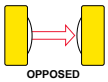	Opposed Emitter	3 m (10 ft)	Infrared 880 nm	SM31E
	Opposed Receiver			SM31R
	Opposed Emitter - Long Range	30 m (100 ft)		SM31EL
	Opposed Receiver - Long Range			SM31RL
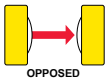	Opposed Emitter - Clear Plastic Detection	0 to 300 mm (0 to 12 in) Actual range varies, depending on the light transmission properties of the plastic material being sensed.	Visible Red 650 nm	SM31EPD
	Opposed Receiver - Clear Plastic Detection			SM31RPD
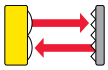	Non-Polarized Retroreflective	5 m (15 ft)		SM312LV
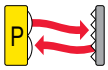	Polarized Retroreflective	55 mm to 2 m (2 in to 7 ft)		SM312LVAG
	Extended-Range Polarized Retroreflective	10 mm to 3 m (0.4 in to 10 ft)		SM312LP
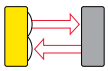	Diffuse	380 mm (15 in)	Infrared 880 nm	SM312D
		300 mm (12 in)		SM312DBZ
	Divergent Diffuse	130 mm (5 in)		SM312W
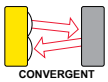	Convergent	16 mm (0.65 in) Focus		SM312C
		43 mm (1.7 in) Focus		SM312C2
		16 mm (0.65 in) Focus	Visible Red 650 nm	SM312CV
		43 mm (1.7 in) Focus		SM312CV2
		16 mm (0.65 in) Focus	Visible Blue 475 nm	SM312CVB
		49 mm (1.9 in) Focus		SM312CV2B
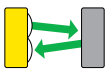		16 mm (0.65 in) Focus	Visible Green 525 nm	SM312CVG
		49 mm (1.9 in) Focus		SM312CV2G
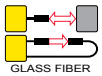	Glass Fiber Optic	Range varies, depending on sensing mode and fiber optics used.	Infrared 880 nm	SM312F
			Visible Red 650 nm	SM312FV
			Visible Blue 475 nm	SM312FVB
			Visible Green 525 nm	SM312FVG
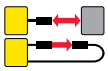	Plastic Fiber Optic		Visible Red 650 nm	SM312FP
			Visible Blue 475 nm	SM312FPB
			Visible Green 525 nm	SM312FPG
	Special High-Power Option Plastic Fiber Optic		Visible Red 650 nm	SM312FPH

Standard 2 m (6.5') cable models are listed.

- 9 m (30') cable: add suffix “W/30” (e.g., SM31EW/30).
- 4-pin Euro QD models: add suffix “QD” (e.g., SM31EQD).
- 150 mm (6") QD Pigtail: add suffix “QDP” (e.g., SM31EQDP).

For a 0.3 ms response: add suffix “MHS” (eg., SM31EMHS).

Dimensions

Models with suffix E, EL, EPD, R, RL, RPD, LV, LVAG, LP, D, C, C2, CV, CV2, CVG, CV2G, CVB, and CV2B

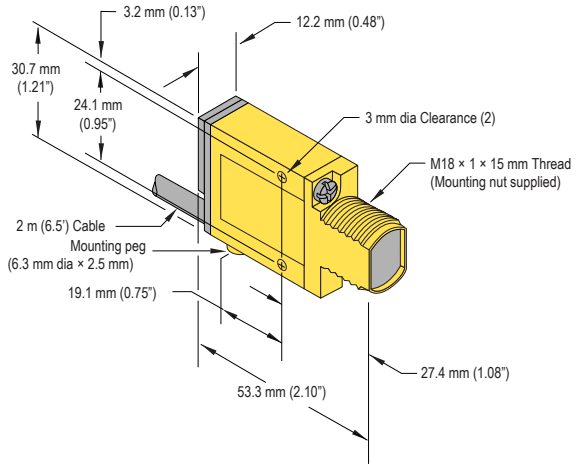

Models with suffix DBZ and W

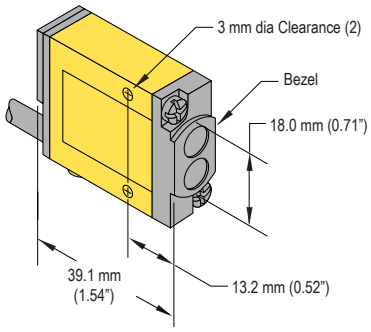

Models with suffix F, FV, FVB, and FVG

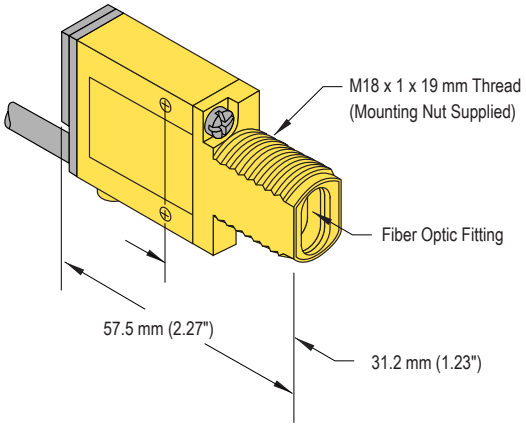

Models with suffix FP, FPB, FPG, and FPH

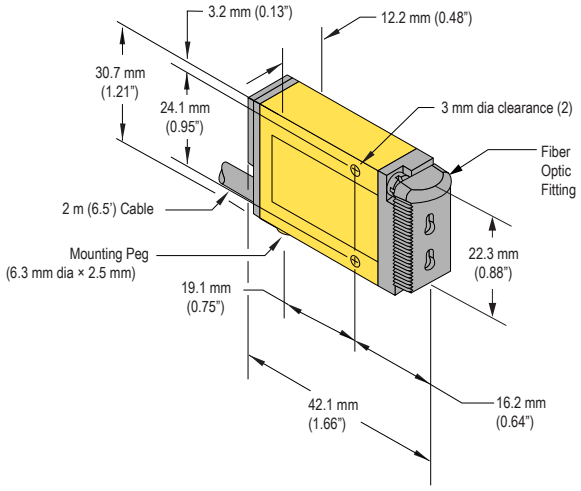

QD Models

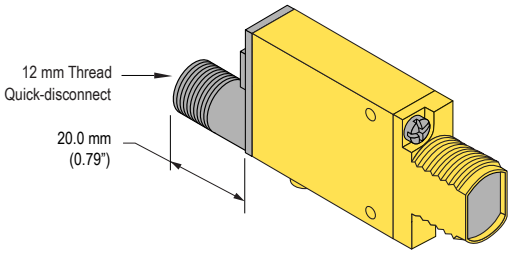

Sensor Features

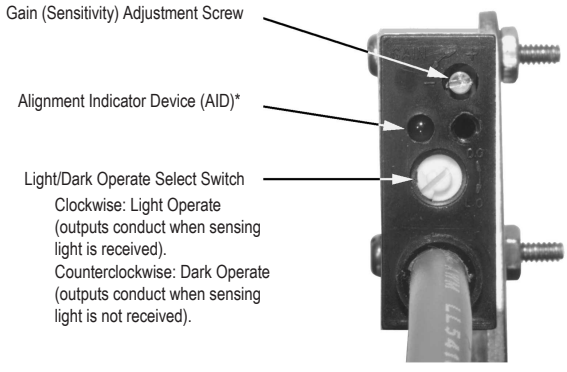

*U.S. Patent no. 4356393

Wiring Diagrams

Emitters with Attached Cable

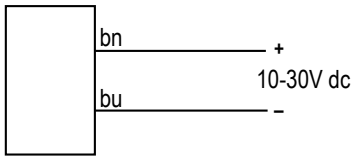

All Other Models with Attached Cable

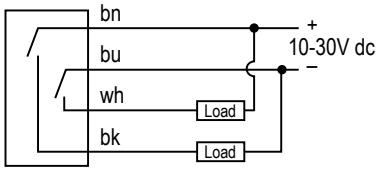

Emitters with Quick Disconnect (4-pin Euro-Style)

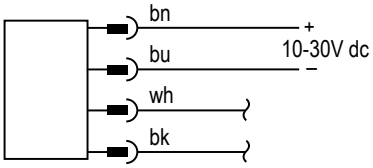

All Other Models with Quick Disconnect (4-pin Euro-Style)

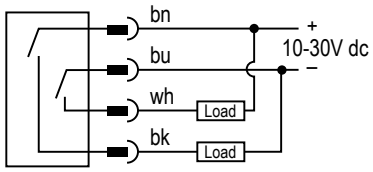

The output type for all models is Bipolar NPN/PNP; load 150 mA max., each output.

Sensor Mounting and Alignment

MINI-BEAM sensors perform most reliably if they are properly aligned and securely mounted.

For maximum mechanical stability, mount MINI-BEAM sensors through 18 mm diameter holes by their threaded barrel (where available), or use a mounting bracket. A complete selection of mounting brackets is available. Visit www.bannerengineering.com or contact the factory for information on mounting options.

Begin with line-of-sight positioning of the MINI-BEAM sensor to its emitter (opposed-mode sensing) or to its target (all other sensing modes). When using a retroreflective sensor, the target is the retroreflector ("retro target"). For diffuse or convergent sensing modes, the target is the object to be detected.

Apply power to the sensor (and to the emitter, if using the opposed mode). Advance the 15-turn Gain control to maximum (clockwise end of rotation) using a small flat-blade screwdriver. The Gain control is clutched at both ends to avoid damage and will "free-wheel" when either endpoint is reached.

If the MINI-BEAM sensor is receiving its light signal, the red LED Alignment indicator will be ON and flashing at a rate proportional to the signal strength (faster = more signal). Move the sensor (or retro target, if applicable) up-down-right-left (including angular rotation) to find the center of the movement zone within which the LED indicator remains ON. Reducing the Gain setting reduces the size of the movement zone for more precise alignment.

Repeat the alignment motions after each Gain reduction. When optimum alignment is achieved, mount sensor(s) (and the retro target, if applicable) solidly in that position. Increase the Gain to maximum.

Test the sensor by placing the object to be detected in the sensing position, then removing it. The Alignment indicator LED should come ON when the sensing beam is established (Light condition) or be ON when the beam is broken (Dark condition). If the Alignment indicator LED stays ON for both sensing conditions, consider the following tips for each sensing mode.

Opposed Mode Alignment

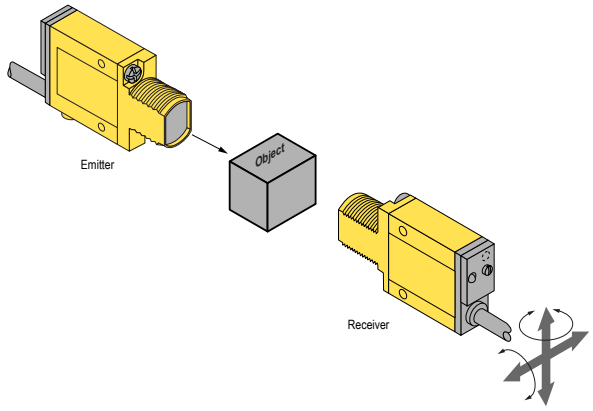

"Flooding" occurs when a portion of the sensing beam passes around the object to be sensed. "Burn-through" occurs when a portion of the emitter's light energy passes through a thin or translucent object, and is sensed by the receiver.

To correct either problem, do one or more of the following to reduce the light energy:

- Reduce the Gain adjustment on the receiver.
- Add an aperture to one or both lenses. (MINI-BEAM apertures, available from Banner, fit neatly inside the lens assembly.)
- Intentionally misalign the emitter and receiver.

Note:

- Light condition: sensor output is ON when there is no object in beam
- Dark condition: sensor output is ON when there is an object in beam

Diffuse Mode Alignment

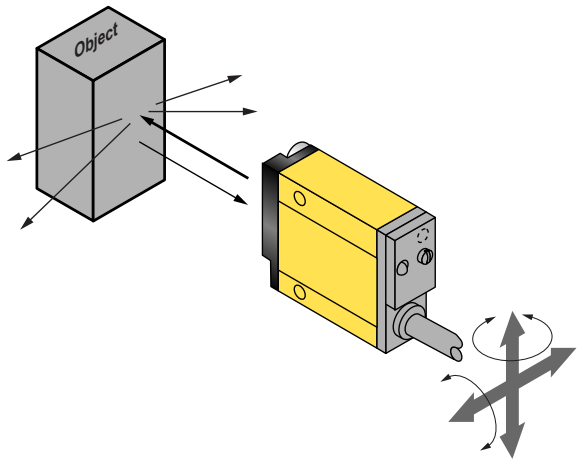

If the Alignment LED does not go OFF when the object is removed from the beam, the sensor is probably detecting light reflected from some background object. To remedy this problem:

- Reduce the reflectivity of the background by painting the surface(s) flat-black, scuffing any shiny surface, or drilling a large hole, directly opposite the diffuse sensor.
- Move the sensor closer to the object to be detected and reduce the Gain adjustment. Rule of thumb for diffuse sensing: The distance to the nearest background object should be at least three times the sensing distance.

Note:

- Light condition: sensor output is ON when there is no object in beam
- Dark condition: sensor output is ON when there is an object in beam

Retroreflective Mode Alignment

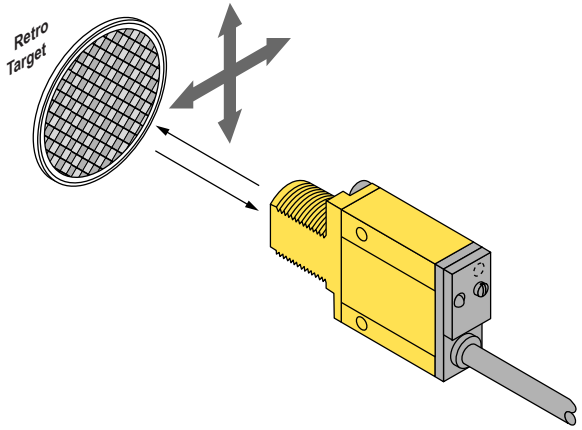

A highly reflective object may reflect enough light back to a retroreflective sensor to allow that object to slip through the beam, without being detected. This problem is called “proxing,” and the following methods may be used to correct it:

- Position the sensor and retro target so the beam will not strike a shiny surface perpendicular to the sensor lens.
- Reduce the Gain adjustment.
- Add a polarizing filter (for model SM312LV).

Note:

- Light condition: sensor output is ON when there is no object in beam
- Dark condition: sensor output is ON when there is an object in beam

Convergent Mode Alignment

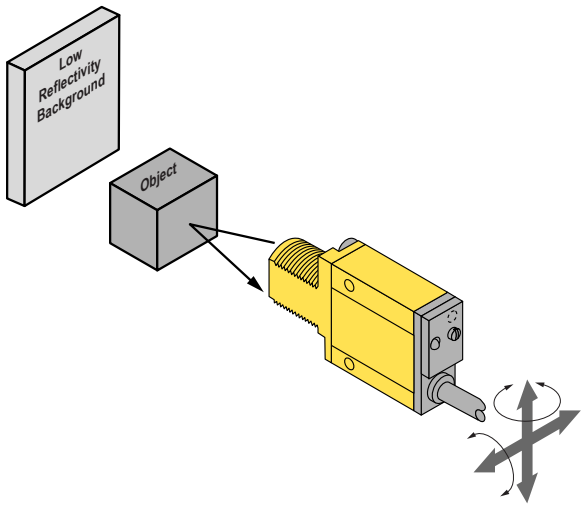

The sensing energy of a convergent mode sensor is concentrated at the specified focus point. Convergent mode sensors are less sensitive to background reflections, compared with diffuse mode sensors. However, if background reflections are a problem:

- Skew the sensor position at a 10° to 25° angle to eliminate direct reflections from shiny background surfaces.
- Reduce the reflectivity of the background by painting the surface(s) flat-black, scuffing any shiny surface, or drilling a large hole, directly opposite the sensor.
- Reduce the Gain adjustment.

Note:

- Light condition: sensor output is ON when there is no object in beam
- Dark condition: sensor output is ON when there is an object in beam

Glass Fiber Installation

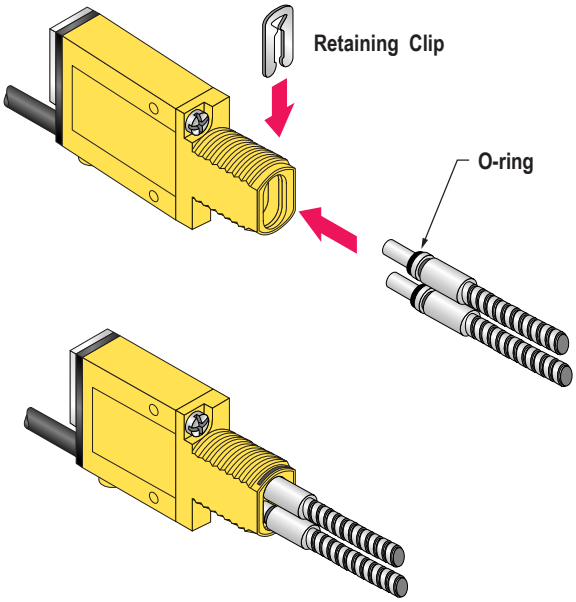

1. Install the O-ring (supplied with the fiber) on each fiber end, as shown in the drawing.
2. While pressing the fiber ends firmly into the ports on the sensor front, slide the U-shaped retaining clip (supplied with the sensor) into the slot in the sensor's barrel, until it snaps into place.

Plastic Fiber Installation

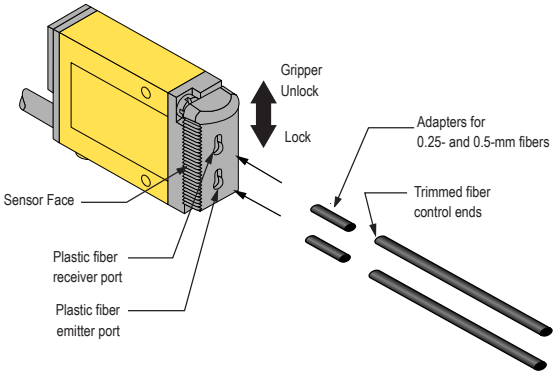

1. With supplied fiber cutter, make a clean cut at control ends of fibers.
2. Unlock the fiber gripper as shown below. Apply appropriate fiber adaptors prior to fiber insertion, if needed.
3. Gently insert the prepared fiber ends into the ports, as far as they will go.
4. Slide the fiber gripper back to lock, as shown below.

Specifications

Supply Voltage and Current
10 to 30V dc (10% maximum ripple) at less than 25 mA (exclusive of load)

Supply Protection Circuitry
Protected against reverse polarity and transient voltages

Output Configuration
Bipolar: One current sourcing (PNP) and one current sinking (NPN) open collector transistor

Output Rating
150 mA maximum each output at 25° C, derated to 100 mA at 70° C (derate ≈ 1 mA per ° C)
OFF State Leakage Current: less than 1 microamp
Output Saturation Voltage (PNP Output): less than 1 volt at 10 mA, less than 2 volts at 150 mA
Output Saturation Voltage (NPN Output): less than 200 millivolts at 10 mA, less than 1 volt at 150 mA

Output Protection Circuitry
Protected against false pulse on power-up and continuous overload or short-circuit of outputs

Output Response Time
Sensors will respond to either a "light" or "dark" signal of 1 millisecond or longer duration, 500 Hz maximum. Modification for 0.3 millisecond response is available (MHS-suffix models; these models also feature reduced sensitivity range and reduced repeatability.) NOTE: Outputs are non-conducting during 100 millisecond delay on power-up.

Repeatability
Opposed: 0.14 milliseconds
Non-Polarized and Polarized Retro, Diffuse, Convergent, Glass Fiber Optic, and Plastic Fiber Optic: 0.3 milliseconds

Response time and repeatability specifications are independent of signal strength.

Adjustments
Light/Dark Operate Select switch
15-turn slotted brass screw Gain (sensitivity) adjustment potentiometer (clutched at both ends of travel)
Located on the rear panel, protected by a gasketed, clear acrylic cover.

Indicators
Patented alignment Indicator Device system (AID™, US patent #4356393) lights a rear-panel-mounted LED indicator when the sensor sees light. Its pulse rate is proportional to the light signal strength (the stronger the signal, the faster the pulse rate).

Construction
Reinforced thermoplastic polyester housing, totally encapsulated, o-ring sealing, acrylic lenses, stainless steel screws

Environmental Rating
Meets NEMA standards 1, 2, 3, 3S, 4, 4X, 6, 12, and 13; IEC IP67.

Connections
PVC-jacketed 4-conductor 2 m (6.5') or 9 m (30') cables, or 4-pin Euro-style QD fitting; QD cables available separately

Operating Conditions
Temperature: –20° to +70°C (–4° to +158°F)
Maximum relative humidity: 90% at 50°C (non-condensing)

Application Note
The NPN (current sinking) output of dc MINI-BEAM sensors is directly compatible as an input to Banner logic modules, including all non-amplified MAXI-AMP and MICRO-AMP modules. MINI-BEAMs are TTL compatible.

Certifications

WARNING: Not To Be Used for Personnel Protection

Never use this product as a sensing device for personnel protection. Doing so could lead to serious injury or death. This product does NOT include the self-checking redundant circuitry necessary to allow its use in personnel safety applications. A sensor failure or malfunction can cause either an energized or de-energized sensor output condition.

Banner Engineering Corp Limited Warranty

Banner Engineering Corp. warrants its products to be free from defects in material and workmanship for one year following the date of shipment. Banner Engineering Corp. will repair or replace, free of charge, any product of its manufacture which, at the time it is returned to the factory, is found to have been defective during the warranty period. This warranty does not cover damage or liability for misuse, abuse, or the improper application or installation of the Banner product.

THIS LIMITED WARRANTY IS EXCLUSIVE AND IN LIEU OF ALL OTHER WARRANTIES WHETHER EXPRESS OR IMPLIED (INCLUDING, WITHOUT LIMITATION, ANY WARRANTY OF MERCHANTABILITY OR FITNESS FOR A PARTICULAR PURPOSE), AND WHETHER ARISING UNDER COURSE OF PERFORMANCE, COURSE OF DEALING OR TRADE USAGE.

This Warranty is exclusive and limited to repair or, at the discretion of Banner Engineering Corp., replacement. **IN NO EVENT SHALL BANNER ENGINEERING CORP. BE LIABLE TO BUYER OR ANY OTHER PERSON OR ENTITY FOR ANY EXTRA COSTS, EXPENSES, LOSSES, LOSS OF PROFITS, OR ANY INCIDENTAL, CONSEQUENTIAL OR SPECIAL DAMAGES RESULTING FROM ANY PRODUCT DEFECT OR FROM THE USE OR INABILITY TO USE THE PRODUCT, WHETHER ARISING IN CONTRACT OR WARRANTY, STATUTE, TORT, STRICT LIABILITY, NEGLIGENCE, OR OTHERWISE.**

Banner Engineering Corp. reserves the right to change, modify or improve the design of the product without assuming any obligations or liabilities relating to any product previously manufactured by Banner Engineering Corp.