DATASHEET - ESR5-NO-31-230VAC



Safety relay emergency stop/protective door, 230VAC, 3 enabling paths

Part no. ESR5-NO-31-230VAC
Catalog No. 119380

EL-Nummer (Norway) 4133320

Delivery program

Product range			Electronic safety relays
Basic function			Emergency stop; emergency switching off Protective door Feedback circuit
Features			
Mounting width		mm	22.5
			Automatically or manually monitored start
Operation			single-channel dual-channel
Supply voltage	U_s		230 V AC, 50/60 Hz
Approval			TÜV Functional Safety FS Type Approved
Safety related characteristics			Cat. 4 PL e according to EN ISO 13849-1 SILCL 3 according to IEC 62061 SIL 3 according to IEC 61508
Number of enabling paths to EN 60204-1 Stop functions category			
Enable current paths to IEC/EN 60204-1 Stop category 0			3
Signal current paths			1

Technical data

General

Intended use			Safety relay for monitoring emergency stop and protective door switch. Module used to safely interrupt electrical circuits.
Policies List			EMV 2004/108/EG, Maschinen 2006/42/EG
Standards			EN ISO 13849-1:2008+AC:2009, EN 62061:2005+AC:2010, EN 61508, Parts 1-7:2001, EN 50178:1997, EN 60204-1:2006+A1:2009
Dimensions (W x H x D)		mm	22.5 x 99 x 114.5
Mounting width		mm	22.5
Weight		kg	0,24
Mounting position			As required
Mounting			Top-hat rail IEC/EN 60715, 35 mm
Connection type			M3 screw terminals
Lifespan, mechanical	Operations	x 10^6	10
Terminal capacity			
Solid		mm^2	1x (0.2 – 2.5) 2x (0.2 – 1)
Flexible with ferrule		mm^2	1x (0.25 – 2.5) 2x (0.25 – 1)
Solid or stranded		AWG	24 - 12
Terminal screw		Nm	
Pozidriv screwdriver		Size	2
Standard screwdriver		mm	0.6 x 3.5
Max. tightening torque		Nm	0.6
Stripping length		mm	7

Material			Housing: polyamide PA not reinforced Contacts: Material: silver tin oxide, gold plated (AgSnO2, 0.2 µm Au)
Duty factor		% DF	100
Operating conditions			
Climatic environmental conditions			
Climatic proofing			Dry heat to IEC 60068-2-2 Damp heat as per EN 60068-2-3
Ambient temperature			
Operation	ϑ	°C	-20 - +55
Storage	ϑ	°C	-40 - +85
Condensation			Non-condensing
Atmospheric conditions			
relative humidity		%	Max. 75
Air pressure (operation)		hPa	795 - 1080
Altitude	Above sea level	m	2000
Power loss	P	W	5.43

Ambient conditions, mechanical

Degree of protection to VDE 0470-1			
Enclosures			IP20
Terminals			IP20
Degree of Protection			Installation location: ≥ IP54
B10d [switching cycles]			230000
Protection against direct contact when actuated from front (EN 50274)			Finger and back-of-hand proof
Vibrations (IEC/EN 60068-2-6)			10 - 150 Hz Amplitude: 0.15 mm Acceleration: 2 g
Clearance in air and creepage distances			EN 50178, UL 508, CSA C22.2, No. 14-95
Rated impulse withstand voltage	U_{imp}	V AC	4000
Insulation			Basic isolation Safe isolation, reinforced insulation and 6 kV between A1-A2 / logic / enable and signal current paths.
Overvoltage category/pollution degree			III/2
Stop category	according to EN60204-1		1,89
Technical safety parameters:			
Values according to EN ISO 13849-1			
Performance level	according to EN ISO 13849-1		PL e
Category	according to EN ISO 13849-1		Kat. 4
Safety integrity level claim limit	in accordance with 62061		SILCL 3
Safety integrity level	In accordance with IEC 61508		SIL 3
Probability of failure per hour	PFH_d	x 10^{-10}	1.89
Prooftest High Demand		Months	240
Demand level		Months	< 12
Prooftest Low Demand		Months	78
Rated operational voltage	U_e	V AC	230
Rated operational voltage	U_e	V	230 V AC
Permissible range			0.85 - 1.1 x Ue
Rated insulation voltage	U_i	V AC	250
Quadratic summation current		A^2	72 A^2 ($I_{TH}^2 = I_1^2 + I_2^2 + I_3^2$)
Notes			Observe derating curve → Engineering
Inrush current		A	min - max 0.01 - 6
Minimum switching capacity		W	0.1

Control circuit

Power supply circuit			
AC operated 50/60 Hz		W	5.8
DC operated		W	2.9
Fuse for control circuit supply			
115 V/230 V			short-circuit proof

Input data

Rated current		mA	S10, S12, S22:35, S34, S35:45
Current consumption		mA	AC: 22
Voltage at input, starting and feedback circuit		V DC	Approx. 24
Max. resistive load of the cable	R	Ω	≦ 11
Short-circuit current		A	0.7
Pick-up time (K1, K2) for UN automatic mode, typical	t_A	ms	300
Pick-up time (K1, K2) for UN manual operation, typical	t_A	ms	40
Pick-up time		ms	at Ue in automatic mode: normally 300 at Ue in manual mode: normally 40
Typical pick-up time			330 ms (if actuated via A1)
Reset time (K1, K2) for U_N , normally	t_R	ms	150 (single-channel) 20 (two-channel)
Recovery time	t_W	ms	Approx. 1000
Simultaneity for inputs 1/2	t_{sync}	ms	∞
Maximum permissible total cable resistance (input and starting circuits for UN)	R_L	Ω	50
Maximum switching frequency		Hz	0.5
Status indication			Green LED

Output data

Contact type			
Non-delayed enable current paths			3
Delayed signal current path			1
Switching voltage			min – max 10 - 250 V AC 10 - 250 V DC
Limiting continuous current		A	per N/O: 6 N/C: 5
Short-circuit protection for output circuits, external			Fuse 10 A gL/gG (Enable current paths) Fuse 4 A gL/gG (Signal current paths)
Output fuse			
NEOZED (N/O)		gL/gG	10
NEOZED (N/C)		gL/gG	6
Maximum breaking power			
Resistive load (τ = 0 ms)			
24 V DC		W	144
48 V DC		W	230
110 V DC		W	68
220 V DC		W	88
250 V AC		VA	2000
Inductive load (τ = 40 ms)			
24 V DC		W	48
48 V DC		W	40
110 V DC		W	35
220 V DC		W	33
Switching capacity			
			In accordance with IEC 60947-5-1
AC-15			
230 V		A	5 A bei 3600S/h
DC-13			
24 V		A	5 A bei 3600S/h
Further information (flip catalog)			description

Electromagnetic compatibility (EMC)

Emitted interference			In accordance with EN 61000-6-4

Interference immunity			according to EN 61000-6-2

Design verification as per IEC/EN 61439

Technical data for design verification			
Rated operational current for specified heat dissipation	I_n	A	0
Heat dissipation per pole, current-dependent	P_{vid}	W	0
Equipment heat dissipation, current-dependent	P_{vid}	W	0
Static heat dissipation, non-current-dependent	P_{vs}	W	5.43
Heat dissipation capacity	P_{diss}	W	0
Operating ambient temperature min.		°C	-20
Operating ambient temperature max.		°C	55
IEC/EN 61439 design verification			
10.2 Strength of materials and parts			
10.2.2 Corrosion resistance			Meets the product standard's requirements.
10.2.3.1 Verification of thermal stability of enclosures			Meets the product standard's requirements.
10.2.3.2 Verification of resistance of insulating materials to normal heat			Meets the product standard's requirements.
10.2.3.3 Verification of resistance of insulating materials to abnormal heat and fire due to internal electric effects			Meets the product standard's requirements.
10.2.4 Resistance to ultra-violet (UV) radiation			Meets the product standard's requirements.
10.2.5 Lifting			Does not apply, since the entire switchgear needs to be evaluated.
10.2.6 Mechanical impact			Does not apply, since the entire switchgear needs to be evaluated.
10.2.7 Inscriptions			Meets the product standard's requirements.
10.3 Degree of protection of ASSEMBLIES			Does not apply, since the entire switchgear needs to be evaluated.
10.4 Clearances and creepage distances			Meets the product standard's requirements.
10.5 Protection against electric shock			Does not apply, since the entire switchgear needs to be evaluated.
10.6 Incorporation of switching devices and components			Does not apply, since the entire switchgear needs to be evaluated.
10.7 Internal electrical circuits and connections			Is the panel builder's responsibility.
10.8 Connections for external conductors			Is the panel builder's responsibility.
10.9 Insulation properties			
10.9.2 Power-frequency electric strength			Is the panel builder's responsibility.
10.9.3 Impulse withstand voltage			Is the panel builder's responsibility.
10.9.4 Testing of enclosures made of insulating material			Is the panel builder's responsibility.
10.10 Temperature rise			The panel builder is responsible for the temperature rise calculation. Eaton will provide heat dissipation data for the devices.
10.11 Short-circuit rating			Is the panel builder's responsibility. The specifications for the switchgear must be observed.
10.12 Electromagnetic compatibility			Is the panel builder's responsibility. The specifications for the switchgear must be observed.
10.13 Mechanical function			The device meets the requirements, provided the information in the instruction leaflet (IL) is observed.

Technical data ETIM 7.0

Relays (EG000019) / Device for monitoring of safety-related circuits (EC001449)

Electric engineering, automation, process control engineering / Low-voltage switch technology / Monitoring equipment (low-voltage switch technology) / Device for monitoring of safety-related circuits (ecl@ss10.0.1-27-37-18-19 [ACO304011])

Model			Basic device
Suitable for monitoring of position switches			Yes
Suitable for monitoring of emergency-stop circuits			Yes
Suitable for monitoring of valves			No
Suitable for monitoring of optoelectronic protection equipment			No
Suitable for monitoring of tactile sensors			No
Suitable for monitoring of magnetic switches			No
Suitable for monitoring of proximity switches			No
Type of electric connection			Screw connection
Rail mounting possible			Yes
Rated control supply voltage Us at AC 50HZ		V	0 - 26.4
Rated control supply voltage Us at AC 60HZ		V	0 - 0

Rated control supply voltage Us at DC		V	0 - 0
Voltage type for actuating			AC
With detachable clamps			Yes
Evaluation inputs			One- and two-channel
With start input			Yes
With muting function			No
With feedback circuit			Yes
Release-delay		s	0 - 0
Number of outputs, safety related, undelayed, with contact			3
Number of outputs, safety related, delayed, with contact			0
Number of outputs, safety related, undelayed, semiconductors			0
Number of outputs, safety related, delayed, semiconductors			0
Number of outputs, signalling function, undelayed, with contact			1
Number of outputs, signalling function, delayed, with contact			0
Number of outputs, signalling function, undelayed, semiconductors			0
Number of outputs, signalling function, delayed, semiconductors			0
Category according to EN 954-1			4
Type of safety acc. IEC 61496-1			None
Stop category acc. IEC 60204			0
Performance level acc. EN ISO 13849-1			Level e
SIL according to IEC 61508			3
With approval for TÜV			Yes
With approval for BG BIA			No
With approval according to UL			Yes
Width		mm	22.5
Height		mm	99
Depth		mm	114.5

Approvals

Product Standards			IEC/EN see Technical Data; UL 508; CSA-C22.2 No. 14-95; CE marking
UL File No.			E29184
UL Category Control No.			NKCR; NKCR7
CSA File No.			UL report applies to both US and Canada
CSA Class No.			3211-83; 3211-03
North America Certification			UL listed, certified by UL for use in Canada
Degree of Protection			IEC: IP20, UL/CSA Type: -

Characteristics

Characteristic curves			

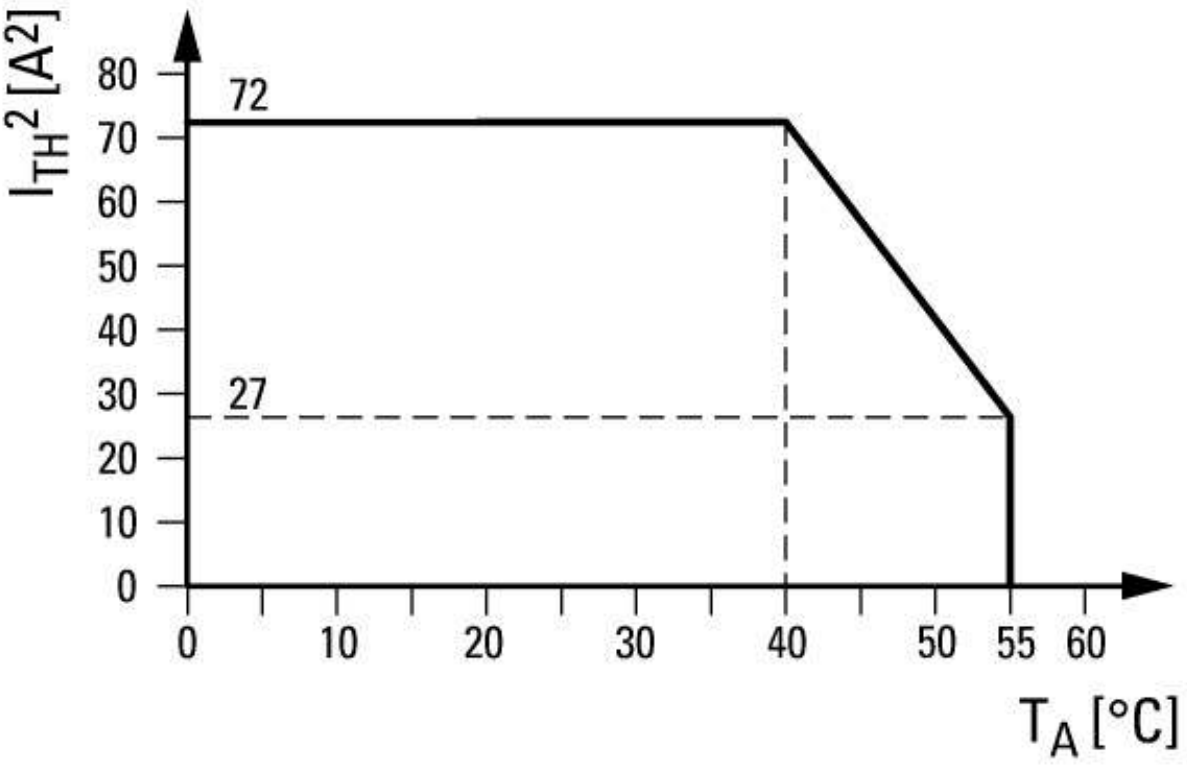

Derating curve

Dimensions

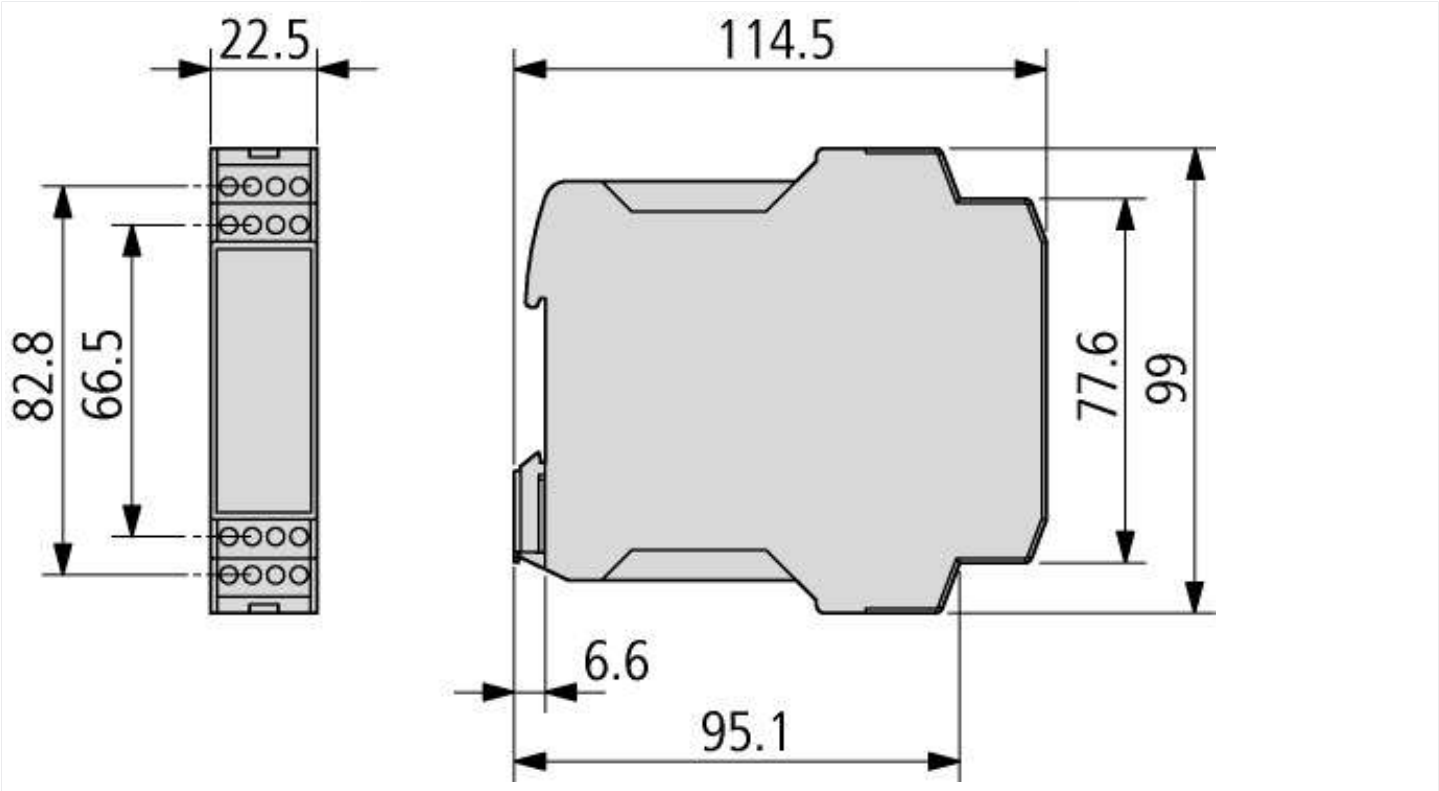

© 07/2021 by Eaton Industries GmbH