Draw-wire encoder A30 | Compact-Line | Measuring length max. 0.6 m



The draw-wire mechanics A30 with analog output stands out with its miniaturized design. It is available with potentiometer, voltage or current output.

RoHS

Analog output



Wide temperature range | High protection level | Reverse polarity protection | Easy mounting | Compact design

Miniaturized and simple

- Measuring length up to 600 mm.
- For applications with a low traversing speed.
- Easy to install.
- Housing of reinforced plastic.

Order code draw-wire encoder

D5.350	X	.	A	XX	X	.	0000
Type	a			b	c		

a *Measuring range*
A = 300 mm [1)]
B = 600 mm

b *Output circuit*
11 = analog output 4 ... 20 mA
22 = analog output 0 ... 10 V DC
supply voltage 15 ... 28 V DC
33 = potentiometer output 10 kΩ

c *Type of connection*
4 = radial cable, 0.5 m [1.64']

Accessories for draw-wire encoder

Dimensions in mm [inch]

Order no.

Guide pulley — **8.0000.7000.0045**



Technical data:
- mounting bracket (anodized alum.)
- guide pulley (plastic POM)
- ball bearing (type 696-2R5)

Scope of delivery:
- 2 x countersunk screws for lateral fixing
- 2 x hexagonal screws for fixing on a flat surface

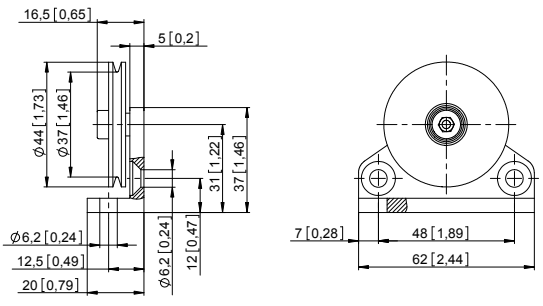

1) Not suitable for potentiometer output / order code b output circuit = 33.

© Fritz Kübler GmbH, subject to errors and changes. 02/2023

Draw-wire encoder A30 | Compact-Line | Measuring length max. 0.6 m

Technical data

Mechanical characteristics (draw-wire mechanics)

Speed max.		0.8 m/s
Acceleration max.		32.3 m/s²
Working temperature		-10 °C ... +80 °C [+14 °F ... +176 °F]
Protection acc. to EN 60529		IP50
Weight		approx. 60 g [2.12 oz]
Extension force F_{min}		3 N
Repeat accuracy		±0.15 mm
Linearity		±0.35 %
Material	housing	plastic
	wire	stainless-steel ø 0.4 mm plastic-coated

Approvals

CE compliant in accordance with

EMC Directive	2014/30/EU
RoHS Directive	2011/65/EU

UKCA compliant in accordance with

EMC Regulations	S.I. 2016/1091
RoHS Regulations	S.I. 2012/3032

Electrical characteristics

Analog output	0 ... 10 V DC	4 ... 20 mA	potentiometer 10 kΩ
Supply voltage	15 ... 28 V DC	–	–
Operating range	–	15 ... 28 V DC	max. 48 V DC
Max. load current	15 mA	–	–
Load	–	max. 500 Ω	–

Terminal assignment (analog output)

Analog sensor **A11** (4 ... 20 mA)			R/I converter				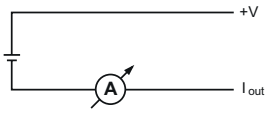
		Signal:	+V	I_{out}	n.c.		
	Cable	Core color:	BN	WH	GN		
Analog sensor **A22** (0 ... 10 V DC)			R/U converter				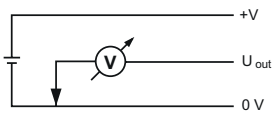
		Signal:	+V	0 V	U_{out}		
	Cable	Core color:	BN	WH	GN		
Analog sensor **A33** (Potentiometer 10 kΩ)			Potentiometer				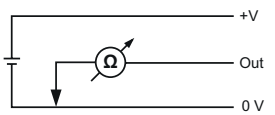
		Signal:	+V	0 V	Out		
	Cable	Core color:	BN	WH	GN		

© Fritz Kübler GmbH, subject to errors and changes. 02/2023

Draw-wire encoder A30 | **Compact-Line** | **Measuring length max. 0.6 m**

Dimensions

Dimensions in mm [inch]

