Inductive sensor

BES M08EH-PSC15B-S04G
BES01PF

BALLUFF
sensors worldwide

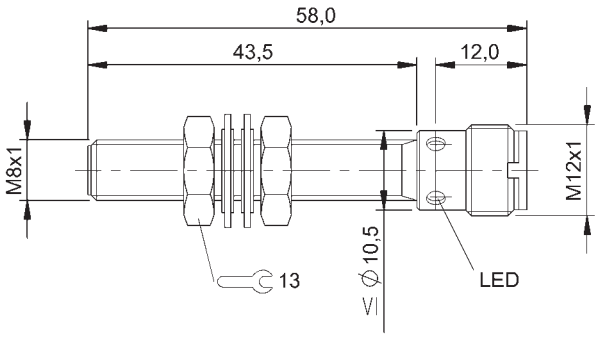

- **PNP**
- **Normally open (NO)**
- **1.50 mm**
- **Flush (shielded)**
- **Connector, M12x1-S04**

LISTED IND. CONT. EQ. 81U2 for use in the secondary of a class 2 source of supply

IND. CONT. EQ 81U2 for use in the secondary of a class 2 source of supply Environmental - Type 1 Enclosure

General attributes

Approvals / Conformity	CE
	cULus
Basic standard	IEC 60947-5-2
Enclosure Type per IEC 60529	IP68 according to BWN PR 20
Function indicator	Yes
Polarity reversal protected	Yes
Power indicator	No
Protection Class	II
Short circuit protected	Yes

Electrical attributes

Connection type	Connector
Eff. operating current Ie	200 mA
Eff. operating voltage Ue DC	24.0 V
Electrical version	DC, direct current
Load capacitance max. (at Ue)	0.500 µF
Max. no-load cur. Io undamped	3.0 mA
Minimum operating current Im	0 mA
No-load current Io damped max.	9.0 mA
Operating voltage UB max. DC [V]	30.0 V
Operating voltage UB min. DC [V]	10.0 V
Rated insulation voltage Ui	250 VAC
Rated short circuit current	100 A

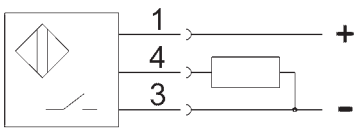

Ripple max. (% of Ue)	15 %
Switching freq. f max. (at Ue)	3000 Hz
Switching function	Normally open (NO)
Switching output	PNP
Voltage drop static max.	2.5 V

Mechanical attributes

Ambient temperature Ta max.	70 °C
Ambient temperature Ta min.	-25 °C
Assured operating distance Sa	1.20 mm
Connector type	M12x1-S04
Depth	58.0 mm
Diameter d1	M08x1
Eff. operating distance Sr	1.50 mm
Housing material	Stainless steel
Mech. installation condition	Flush (shielded)
Mounting length	43.0 mm
Rated operating distance Sn [mm]	1.50 mm
Sensing face material	PBT
Tightening torque	8 Nm

Additional text
The sensor is functional again after the overload has been eliminated.

