FYTB 35 TF

Compliance with standard	ISO
Housing material	Cast iron
Sealing solution	Standard seals with additional flingers

Dimensions

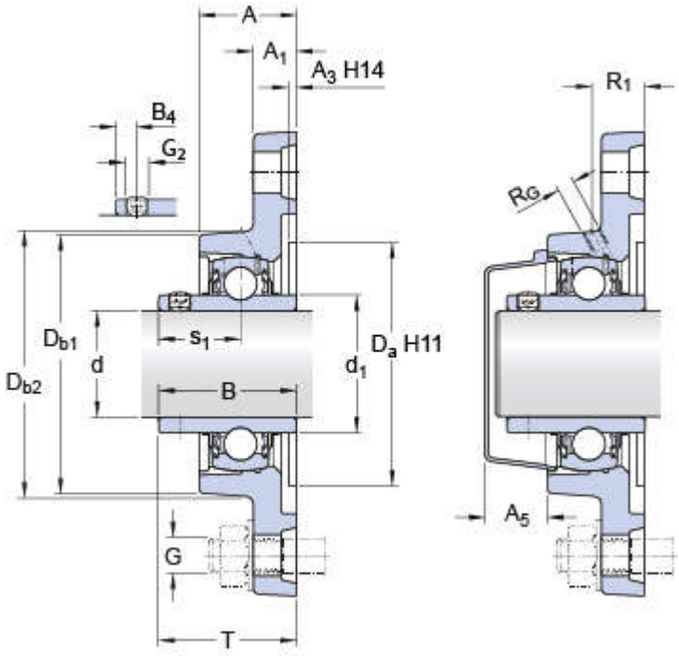

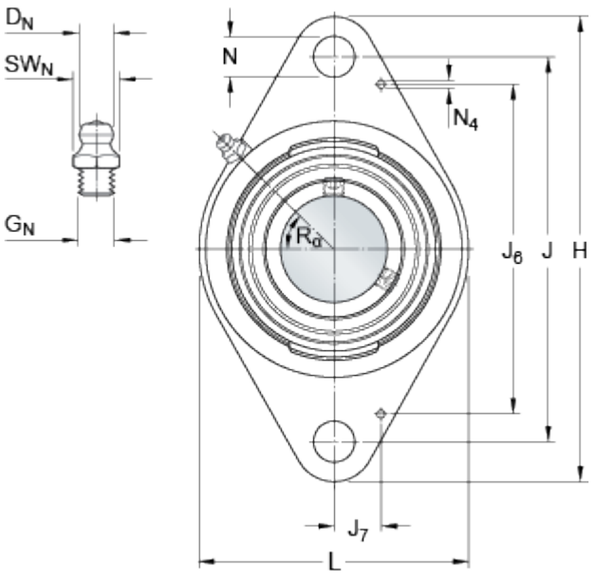

d		35	mm
d_1	≈	46.1	mm
D_a		88.9	mm
D_{b1}		88	mm
D_{b2}		96	mm
A		34.5	mm
A_1		13	mm
A_3		3.2	mm
A_5		24.5	mm
B		42.9	mm
B_4		6	mm
J		130	mm
H		156	mm
L		96	mm
N		14	mm
s_1		25.4	mm
T		46.4	mm

Threaded hole

R_G	1/4-28 UNF	
R_1	22	mm
R_α	45	°

Grease fitting

D_N	6.5	mm
SW_N	7	mm

	G_N	1/4-28 SAE-LT	

Dowel pins

J_6	106	mm
J_7	15	mm
N_4	2	mm

Calculation data

Basic dynamic load rating	C	25.5	kN
Basic static load rating	C_0	15.3	kN
Fatigue load limit	P_u	0.655	kN
Limiting speed		5300	r/min
(with shaft tolerance h6)			

Mass

Mass bearing unit		1.15	kg

Mounting information

Thread grub screw	G_2	M6x0.75	
Hexagonal key size for grub screw	N	3	mm
Recommended tightening torque for grub screw		4	N·m
Recommended diameter for attachment bolts, mm	G	12	mm
Recommended diameter for attachment bolts, inch	G	0.5	in

Included products

Housing	FYTB 507 M
Bearing	YAR 207-2F

Associated products

End cover	ECY 207