VARIMETER IMD
Insulation Monitor
MK 5880N, MH 5880

0239279



Function Diagram

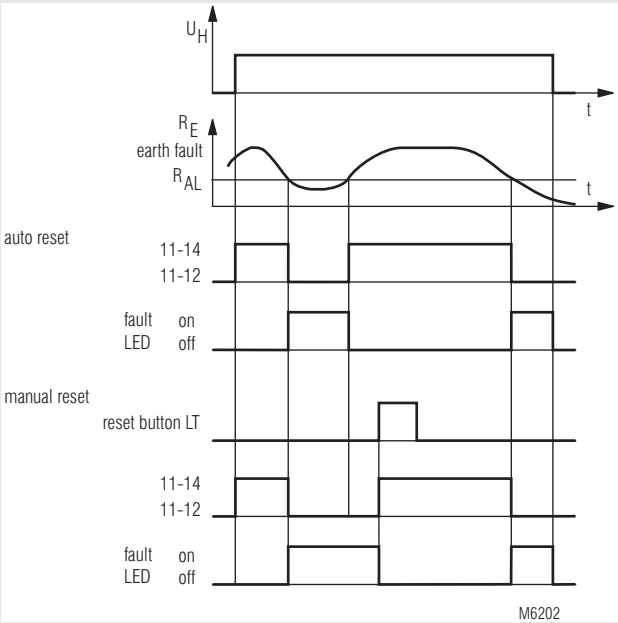

MK 5880N

- According to IEC/EN 61 557-8
- For single and 3-phase AC-systems up to 0 ... 500 V and 10 ... 1000 Hz
- Monitors also disconnected voltage systems
- Adjustable tripping value R_{AL} of 5 ... 100 kΩ
- De-energized on trip
- Auxiliary voltage, measuring circuit and output contacts are galvanically separated
- Manual and auto reset
- With test and reset button
- Connections for external test and reset buttons possible
- LED indicators for operation and alarm
- 2 changeover contacts
- MK 5880N/200 with additional prewarning
  - adjustable prewarning value 10 kΩ ... 5 MΩ
  - 1 output relay for alarm and 1 for pre-warning
- MH 5880/500: similar to MK 5880N but with galvanic separated analogue output and 11 step LED chain for the actual insulation value
- Wire connection: also 2 x 1.5 mm² stranded ferruled, or 2 x 2.5 mm² solid DIN 46 228-1/-2/-3/-4
- As option with pluggable terminal blocks for easy exchange of devices
  - with screw terminals
  - or with cage clamp terminals
- MK 5880N: 22.5 mm width
  MH 5880: 45 mm width

Approvals and Markings

CE cULus 1) A025518 AC

1) only MK 5880N, see CCC-Data

Applications

- Monitoring of insulation resistance of ungrounded voltage systems to earth
- MK 5880N/200 can also be used to monitor standby devices for earth fault, e. g. motor windings of devices that have to function in the case of emergency.
- Other resistance monitoring applications

Notes

When monitoring 3-phase IT systems it is sufficient to connect the insulation monitor only to one phase. The 3-phases have a low resistive connection (approx. 3 - 5 Ω) via the feeding transformer. So failures that occure in the non-connected phases will also be detected.

Function

The device is connected to the supply via terminals A1-A2. The unit can either be supplied from the monitored voltage system or from an separate auxiliary supply. Terminal L is connected to the monitored voltage and PE to earth. If the insulation resistance R_E drops below the adjusted alarm value R_{AL} the red LED goes on and the output relay switches off (de-energized on trip). If the unit is on auto reset (bridge between LT1-LT2) and the insulation resistance gets better (R_E rises), the insulation monitor switches on again with a certain hysteresis and the red LED goes off. Without the bridge between LT1-LT2 the Insulation monitor remains in faulty state even if the insulation resistance is back to normal. The reset is done by pressing the internal or external reset button or by disconnecting the auxiliary supply. By activating the "Test" button an insulation failure can be simulated to test the function of the unit.
The variant MK 5880N.38/200 has a second setting range with a higher resistance up to 5 MΩ (Potentiometer R_{VW}). This setting value can be used for pre-warning with relay output.
When set to manual reset the latching is active on both settings R_{AL} and R_{VW}. Therefore it is possible in the case of a short insulation decrease that the fault is stored and passed via contacts 21-22-24 to a PLC while the main fault does not lead to a disconnection of the mains via the contacts 11-12-14.

All technical data in this list relate to the state at the moment of edition. We reserve the right for technical improvements and changes at any time.

Function Diagram

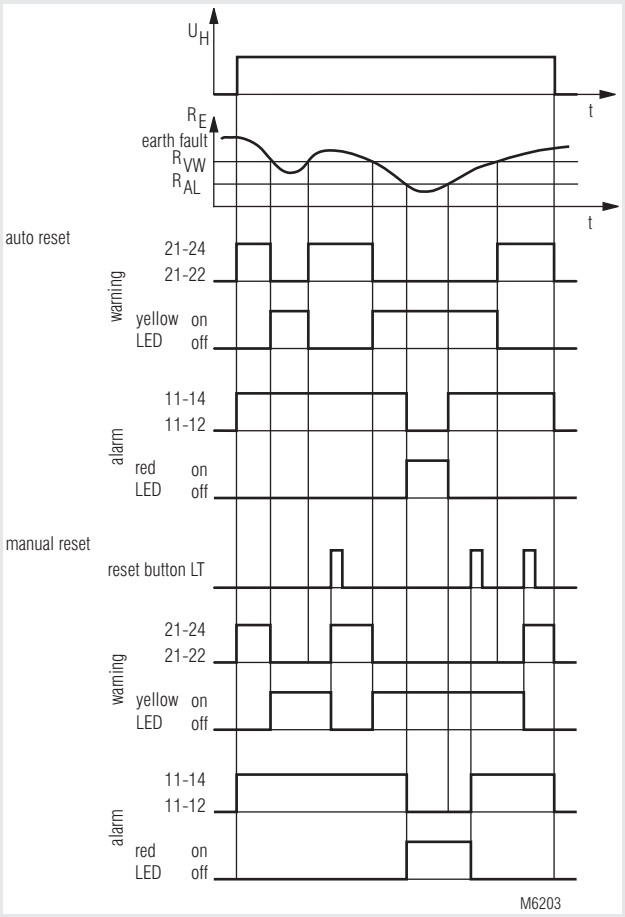

MK 5880N/200

Circuit Diagrams

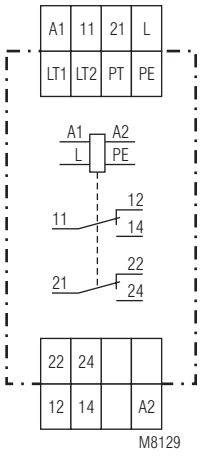

MK 5880N

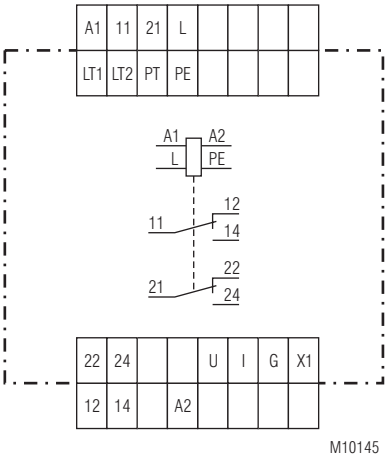

MH 5880

Connection Terminals

Terminal designation	Signal description
A1, A2	Auxiliary voltage
L	Connection for measuring circuit
PE	Connection for protective conductor
PT(/PE)	Connection for external test button
LT1/LT2	Connection for external reset or control input for hysteresis function or manual reset LT1/LT2 bridged: Hysteresis function LT1/LT2 not bridged: Manual reset
11, 12, 14	Alarm signal relay (1 changeover contact)
21, 22, 24 [1]	Prewarning signal relay (1 changeover contact)
U, I, G, X1 [2]	Analogue output X1/G not bridged: U-G 0 ... 10V; I-G 0 ... 20mA X1/G bridged: U-G 2 ... 10V; I-G 4 ... 20mA

[1] only MK 5880N/200 and MH 5880
[2] only MH 5880

Indicators

green LED "ON": On, when supply voltage connected
red LED "AL": On, when insulation fault detected ($R_E < R_{AL}$)
yellow LED "VW": On, when insulation resistance is under prewarning value, $R_E < R_{VW}$ (only with variant MK 5880N.38/200)

Notes

The insulation monitor MK 5880N is designed to monitor AC-voltage systems. Overlayed DC voltage does not damage the instrument but may change the conditions in the measuring circuit.

In one voltage system only one Insulation monitor must be connected. This has to be observed when coupling voltage system.

Line capacitance C_E to ground does not influence the insulation measurement, as the measurement is made with DC-voltage. It is possible that the reaction time in the case of insulation fault gets longer corresponding to the time constant $R_E * C_E$.

The model MK 5880N.38/200 can be used, because of it´s higher setting value up to 5 MΩ, to monitor single or 3-phase loads for ground fault. If the load is operated from a grounded system the insulation resistance of the load can only be monitored when disconnected from the mains. This is normally the fact with loads which are operated seldom or only in the case of emergency but then must be function (see connection example).

The auxiliary supply can be connected to a separate auxiliary supply or to the monitored voltage system. The range of the auxiliary supply input has to be observed.

The MH5880/500 has in addition to the prewarning function also a galvanic separated analogue output and an 11 step LED chain indicator, that displays the actual insulation value between 20 kOhm and 1 MOhm. On terminals U/G of the analogue output 0-10 V are provided, on terminals I/G 0-20 mA are available. By bridging terminals X1 and G the output can be switched over to 2 ... 10 V and 4 ... 20 mA. For the scaling of the analogue output see diagram M10142.

Setting

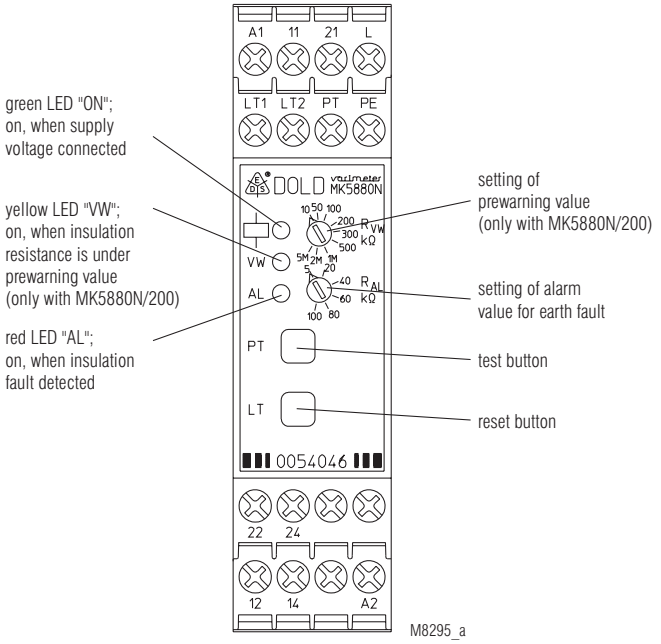

Technical Data

Auxiliary circuit

Nominal voltage U_N:	AC 220 ... 240 V, AC 380 ... 415 V DC 12 V, DC 24 V	
Voltage range		
AC:	0.8 ... 1.1 U_N	
DC:	0.9 ... 1.25 U_N	
Frequency range (AC):	45 ... 400 Hz	
Nominal consumption:		
AC:	approx. 2 VA	
DC:	approx. 1 W	

Measuring circuit

Nominal voltage U_N:	AC 0 ... 500 V	
Voltage range:	0 ... 1.1 U_N	
Frequency range:	10 ... 1000 Hz	
Alarm value R_{AL}:	5 ... 100 kΩ	
Prewarning value R_{VW} (only at MK 5880N/200):	10 kΩ ... 5 MΩ	
Setting R_{AL}, R_{VW}:	infinite variable	
Internal test resistor:	equivalent to earth resistance of < 5 kΩ	
Internal AC resistance:	> 250 kΩ	
Internal DC resistance:	> 250 kΩ	
Measuring voltage:	approx. DC 15 V, (internally generated)	
Max. measuring current (R_E = 0):	< 0.1 mA	
Max. permissible noise DC voltage:	DC 500 V	
Operate delay		
at R_{AL} = 50 kΩ, C_E = 1 µF		
R_E from ∞ to 0.9 R_{AL}:	approx. 1.3 s	
R_E from ∞ to 0 kΩ:	approx. 0.7 s	
Response inaccuracy:	± 15 % + 1.5 kΩ	IEC 61557-8
Hysteresis		
at R_{AL} = 50 kΩ:	approx. 15 %	

Technical Data

Output

Contacts:		
MK 5880N.12:	2 changeover contacts	
MK 5880N.38/200:	2 x 1 changeover contact	
Thermal current I_{th}:	4 A	
Switching capacity		
to AC 15		
NO contact:	3 A / AC 230 V	IEC/EN 60 947-5-1
NC contact:	1 A / AC 230 V	IEC/EN 60 947-5-1
to DC 13:	1 A / DC 24 V	IEC/EN 60 947-5-1
Electrical life		IEC/EN 60 947-5-1
to AC 15 at 1 A, AC 230 V:	≥ 3 x 10^5 switching cycles	
Short circuit strength		
max. fuse rating:	4 A gL	IEC/EN 60 947-5-1
Mechanical life:	≥ 30 x 10^6 switching cycles	

Analogue output with MH 5880/500

galvanic separation AC 3750V
to auxiliary supply, measuring circuit and relay output
terminal U(+) / G(-): 0 ... 10 V, max. 10 mA
terminal I (+) / G(-): 0 ... 20 mA, burden 500 Ohm
change to 2 ... 10 V or 4 ... 20 mA by bridging terminal X1 and G (see diagram M10142)

General Data

Operating mode:	Continuous operation	
Temperature range:		
Operation:	- 20 ... + 60 °C	
Storage:	- 25 ... + 70 °C	
Altitude:	< 2,000 m	
Clearance and creepage distances		
Overvoltage category:		
Auxiliary and measuring voltage		
≤ 300 V:	III	
> 300 V:	II	
Rated impulse voltage / pollution degree		
between auxiliary supply connections (A1- A2):	4 kV / 2 at AC-auxiliary voltage	IEC 60 664-1
between measuring input connections (L - PE):	4 kV / 2	IEC 60 664-1
between auxiliary supply and measuring input:	4 kV / 2	IEC 60 664-1
between auxiliary supply and measuring input to relay contacts:	4 kV / 2	IEC 60 664-1
between relay contacts 11-12-14 to relay contacts 21-22-24:	4 kV / 2	IEC 60 664-1
Insulation test voltage		
Routine test:	AC 2.5 kV; 1 s	
EMC		
Electrostatic discharge:	8 kV (air)	IEC/EN 61 000-4-2
HF irradiation		
80 MHz ... 2.7 GHz:	10 V / m	IEC/EN 61 000-4-3
Fast Transients:	2 kV	IEC/EN 61 000-4-4
Surge voltages		
between A1 - A2:	2 kV	IEC/EN 61 000-4-5
between L - PE:	2 kV	IEC/EN 61 000-4-5
between A1 - A2 - PE:	4 kV	IEC/EN 61 000-4-5
HF-wire guided:	10 V	IEC/EN 61 000-4-6
Interference suppression:		
Devices with AC-aux. voltage:	Limit value class B	EN 55 011
Devices with DC-aux. voltage:	Limit value class A*)	

*) The device is designed for the usage under industrial conditions (Class A, EN 55011).
When connected to a low voltage public system (Class B, EN 55011) radio interference can be generated.
To avoid this, appropriate measures have to be taken.

Technical Data

Degree of protection

Housing:	IP 40	IEC/EN 60 529
Terminals:	IP 20	IEC/EN 60 529
Housing:	Thermoplastic with V0 behaviour according to UL subject 94	
Vibration resistance:	Amplitude 0.35 mm frequency 10 ... 55 Hz	IEC/EN 60 068-2-6
Climate resistance:	20 / 060 / 04	IEC/EN 60 068-1
Terminal designation:		EN 50 005
Wire connection		DIN 46 228-1/-2/-3/-4
Screw terminals (integrated):	1 x 4 mm² solid or 1 x 2.5 mm² stranded ferruled or 2 x 1.5 mm² stranded ferruled or 2 x 2.5 mm² solid	
Insulation of wires or sleeve length:	8 mm	
Plug in with screw terminals		
max. cross section for connection:	1 x 2.5 mm² solid or 1 x 2.5 mm² stranded ferruled	
Insulation of wires or sleeve length:	8 mm	
Plug in with cage clamp terminals		
max. cross section for connection:	1 x 4 mm² solid or 1 x 2.5 mm² stranded ferruled	
min. cross section for connection:	0.5 mm²	
Insulation of wires or sleeve length:	12 $^{\pm 0.5}$ mm	
Wire fixing:	Plus-minus terminal screws M 3.5 box terminals with wire protection or cage clamp terminals	
Fixing torque:	0.8 Nm	
Mounting:	DIN rail	IEC/EN 60 715
Weight		
MK 5880N:	approx. 180 g	
MH 5880:	approx. 320 g	

Dimensions

Width x heigth x depth	
MK 5880N:	22.5 x 90 x 97 mm
MK 5880N PC:	22.5 x 111 x 97 mm
MK 5880N PS:	22.5 x 104 x 97 mm
MH 5880:	45 x 90 x 97 mm

CCC-Data

Auxiliary circuit	
Nominal voltage U_N:	AC 220 … 240 V DC 12 V, DC 24 V
Switching capacity:	
to AC 15	
NO contact:	1.5 A / AC 230 V

Technical data that is not stated in the CCC-Data, can be found in the technical data section.

Standard Type

MK 5880N.12 AC 220 ... 240 V

Article number:	0054044
• Auxiliary voltage U_H :	AC 220 ... 240 V
• adjustable alarm value R_{AL}:	5 ... 100 kΩ
• Width:	22.5 mm

Variants

MK 5880N.38/200:	with pre-warning
MH 5880.38/500:	similar to MK 5880N but with galvanic separated analogue output (current/voltage) and 11 step LED chain for the actual insulation value Width: 45 mm

Ordering example for variants

MK 5880N .38 PS /200 AC 380 ... 415 V AL 5 ... 100 kΩ VW 10 K ... 5MΩ

- VW 10 K ... 5MΩ: Pre-warning setting
- AL 5 ... 100 kΩ: Alarm setting
- AC 380 ... 415 V: Auxiliary value
- /200: Variant, if required
- PS: Type of terminals without indication: terminal blocks fixed, with screw terminals
  - PC (plug in cage clamp): pluggable terminal blocks with cage clamp terminals
  - PS (plug in screw): pluggable terminal blocks with screw terminals
- .38: Contacts
- MK 5880N: Type

Options with Pluggable Terminal Blocks



Screw terminal (PS/plugin screw)



Cage clamp terminal (PC/plugin cage clamp)

Notes

Removing the terminal blocks with cage clamp terminals

1. The unit has to be disconnected.
2. Insert a screwdriver in the side recess of the front plate.
3. Turn the screwdriver to the right and left.
4. Please note that the terminal blocks have to be mounted on the belonging plug in terminations.

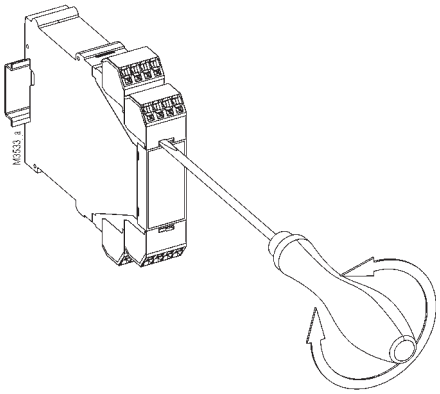

Characteristic

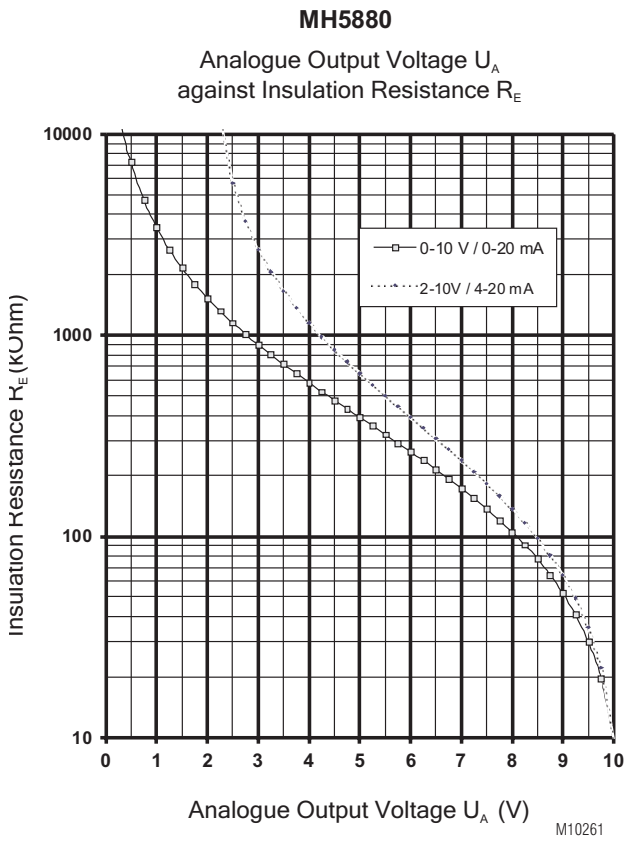

Analogue output voltage is proportional to the insulation resistance R_E

Connection Examples

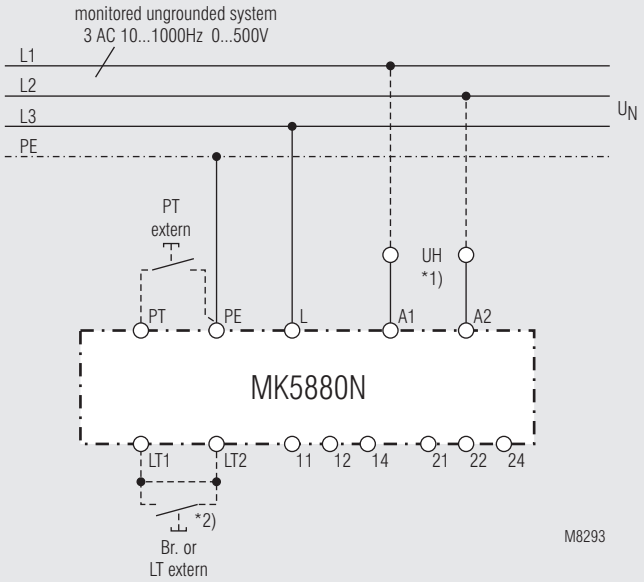

Monitoring of an ungrounded voltage system.

*1) Auxiliary supply U_H (A1 - A2) can be taken from the monitored voltage system. The range of the auxiliary supply input must be observed.

*2) with bridge LT1 - LT2: automatic reset
without bridge LT1 - LT2: manual reset, reset with button LT

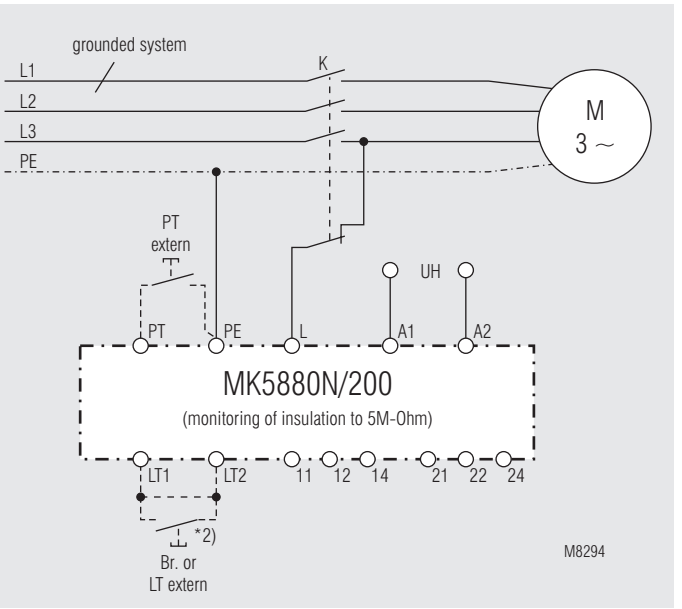

Monitoring of motorwindings againgst ground
The insulation of the motor to ground is monitored as long as contactor K does not activate the load.

*2) with bridge LT1 - LT2: automatic reset
without bridge LT1 - LT2: manual reset, reset with button LT