Brand of NTN corporation

Technical data

EXFCE206

Bearing units



Grey cast housing, radial insert ball bearing with eccentric locking collar, seal with slinger

KIT CONTENT

EX206G2, FCE206

VISUAL (S)

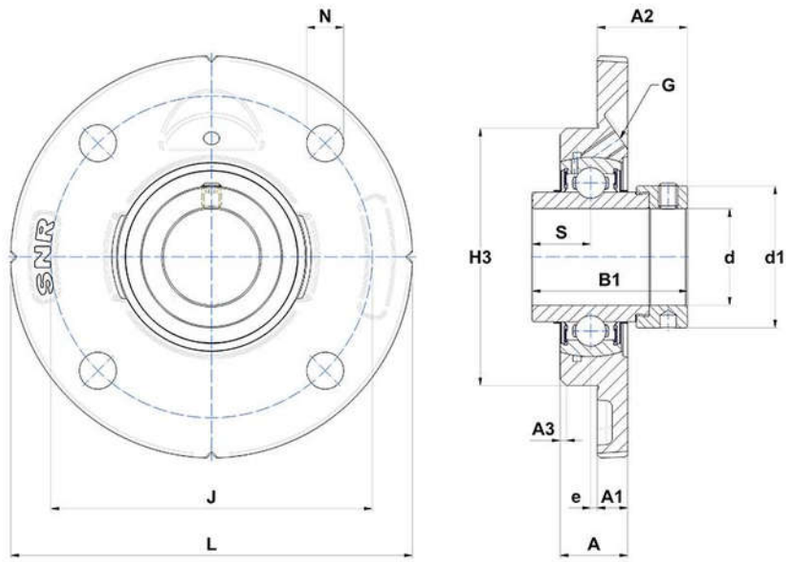

PRODUCT DEFINITION

Brand	SNR
A - Housing height	21 mm
A1 - Housing foot height / flange height	9,5 mm
A2 - Total height from mounting surface	28,1 mm
A3 - Centering depth / chamfer dimension	2 mm
B - Width of Inner Ring	36,4 mm

EXFCE206
Bearing units

PRODUCT DEFINITION	
B1 - Overall width Inner Ring	48,3 mm
d - Shaft diameter	30 mm
d1 - Outer dia of eccent. Lock. collar / nut of adapter sleeve	44,1 mm
e - Distance mounting surface to bearing center	-2 mm
G - Grease fitting	M6x1
H3 - Centering dia	80 mm
J - Mounting holes distance	100 mm
L - Housing width / diameter	125 mm
N - Mounting hole dimension	11,5 mm
S - Distance front side/bearing centre	18,2 mm

PRODUCT PERFORMANCE	
C - Dynamic load rating	19500000 mN
C0 - Static load rating	11200000 mN
Operating temperature min.	253,15 °K
Operating temperature max.	373,15 °K

OTHER FEATURES	
Mass	1,08 kg
Recommended tightening torque for set screw	11.5 N-m